CONSTRUCTION (ENVIRONMENTAL) MANAGEMENT PLAN - BIODIVERSITY

C(E)MP-B FOR THE PROPOSED NEW LIDL FOOD STORE,
Blackmoorfoot Road, Huddersfield
August 2025

(PREPARED ON BEHALF OF LIDL)

REV /

htcarchitects

CEMP01

INTRODUCTION

Appointment

HTC have prepared a Construction (Environment) Management Plan - Biodiveristy (C(E)MP-B) for Part of former St Lukes Hospital site, Blackmoorfoot Road, Crosland Moor, Huddersfield, HD4 5RA (hereafter referred to as 'the site').

Planning permission was granted by approval decision ref. 2023/62/91405/W on 05 August 2025.

The description of development is:

"Erection of foodstore (Class E) with associated access, parking, servicing area and landscaping."

Proposed Development

This C(E)MP-B has been prepared to address the requirements of conditions 7 & 8, which states:

7. Prior to development commencing, a Construction (Environmental) Management Plan - (C(E)MP) shall be submitted to and approved in writing by the Local Planning Authority. The C(E)MP shall include details of:

- Any phasing of development and timetable of all works;
- Hours of works;
- Construction access arrangements:
- Construction vehicle sizes and routes;
- Numbers and times of construction vehicle movements;
- Locations of HGV waiting areas and details of their management;
- Parking for construction workers;
- Loading and unloading of plant and materials;
- Storage of plant and materials;
- Signage;
- Measures to be taken to minimise the deposit of mud, grit and dirt on public highways by vehicles travelling to and from the site, including the provision of adequate wheel washing facilities within the site;
- Street sweeping;
- Measures to control and monitor the emission of dust and dirt during construction;
- Site waste management, including details of recycling/disposing of waste resulting from construction works;
- Mitigation of noise and vibration arising from all construction-related activities, including restrictions on the hours of working on the site including times of deliveries;
- Artificial lighting used in connection with all construction-related activities and security of the construction site;
- Site manager and resident liaison officer contacts, including details of their remit and responsibilities;
- Means of engagement undertaken with local residents, occupants and/or their representatives, and means of continued engagement during the construction process; and
- Engagement with the developers of nearby sites to agree any additional measures required in relation to cumulative impacts (should construction be carried out at nearby sites during the same period). The development shall be carried out strictly in accordance with the C(E)MP so approved throughout the period of construction and no change therefrom shall take place without the prior written consent of the Local Planning Authority.

INTRODUCTION

8. Prior to development commencing, (including demolition, ground works, vegetation clearance) a Construction Environmental Management Plan: Biodiversity (CEMP: Biodiversity) shall be submitted to, and approved in writing by, the Local Planning Authority. The CEMP: Biodiversity shall include the following:

- Risk assessment of potentially damaging construction activities;
- Identification of "biodiversity protection zones";
- Practical measures (both physical measures and sensitive working practices) to avoid or reduce impacts during construction (may be provided as a set of method statements);
- The location and timing of sensitive works to avoid harm to biodiversity features;
- The times during construction when specialist ecologists need to be present on site to oversee works;
- Responsible persons and lines of communication;
- The role and responsibilities on site of an ecological clerk of works (ECoW) or similarly competent person; and
- Use of protective fences, exclusion barriers and warning signs.

The approved CEMP: Biodiversity shall be adhered to and implemented throughout the construction period strictly in accordance with the approved details, unless otherwise agreed in writing by the local planning authority.

The C(E)MP-B has been prepared in respect of all phases of development including demolition, construction and operation. The report is to be read in conjunction with the Construction Management Plan – 'HTC-P430 Construction Management Plan'.

<u>Objective and Scope of Work</u>

The objective and scope of the CEMP has been based on the information provided and all available site information.

The CEMP will cover both the construction and operational phases of the development and will set out the intended methods of effectively managing potential environmental impacts arising from the development of the site.

<u>Limitations</u>

The conclusions and recommendations presented in this report are the result of our professional interpretation of the information currently available. HTC reserves the right to amend the CEMP and recommendations if further information becomes available.

SITE INFORMATION AND CONTACTS

SITE DETAILS & CONTACTS

Site Location
The site is located at **Blackmoorfoot Road, Huddersfield**

Roles and Responsibilities

This section describes the environmental roles and responsibilities of key members of the project team and provides contact details for the relevant personnel. The Contractor shall assign individuals to each of the roles and responsibilities outlined below:

Construction Director

+ Take responsibility for the overall environmental management process and champion all areas of environmental management.
+ Ensure that appropriate resources are in place to effectively implement the CEMP and deliver all legal requirements.

Site Manager

+ Ensure that appropriate resources are in place to effectively implement the CEMP and ensure that all legal requirements are identified and met.
+ Develop and review the CEMP throughout the construction process to ensure it remains relevant and effective in identifying and managing environmental risks.
+ Monitor construction activities and performance to ensure compliance with the CEMP and that hazards are identified, and appropriate control measures are being effective
+ Ensure delivery of environmental training to personnel within the project team
+ Act as a main point of contact between the regulatory authorities and the project on environmental issues.
+ Implement the use of an accurate Site Waste Management Plan (SWMP) to and ensure its applicability to the site operations.
+ Ensure the accurate reporting of resource usage e.g. energy and water.
+ Manage investigation and resolution of complaints in accordance with the Complaints Handling Protocol.
+ Ensure correct procedures are followed in case of an environmental incident.

Construction Supervisor / Ecological Clerk of Works

+ Ensure compliance with the CEMP and associated documents on a day-to-day basis.
+ Remain vigilant to spills and fully investigate and act on any environmental incidents and report findings to the Site Manager
+ Conduct and document weekly environmental inspection and auditing.
+ Maintain full records of the progress of environmental works
+ Ensure that environmentally orientated briefings and “Toolbox Talks” are being delivered to the site workforce on a minimum fortnightly basis.
+ Implement and maintain environmental controls on site including an auditable environment record filing system
+ Appointing a suitable experienced ecologist to ensure the discovery of any nesting birds/ wildlife during demolition/construction is implemented as per ecological impact assessment report – appendix 4,5 and 6

SITE INFORMATION AND CONTACTS

Roles and Responsibilities

Site Staff & Sub-Contractors

+ Comply with direction given in the Site Induction and proactively approach environmental issues whilst on site.
+ Be fully aware of the environmental procedures in place and if they have any questions they should be directed towards the Site Manager or Construction Supervisor
+ Ensure all construction activities are carried out in line with procedures detailed in the CEMP.
+ Report any environmental incident to the Site Manager
+ Be fully aware of the environmental procedures in place and if they have any questions they should be directed towards the Site Manager or Construction Supervisor
+ Activities are carried out in line with procedures detailed in the CEMP.
+ Report any environmental incident to the Site Manager
+ Be fully aware of the environmental procedures in place and if they have any questions they should be directed towards the Site Manager or Construction Supervisor

Table below should be replicated with relevant information to establish hierarchy and responsibility of the the site.

ROLE	NAME	ADDRESS	CONTACT NUMBER/ EMAIL
Construction Director	To be confirmed on appointment of contractor		
Site Manager	To be confirmed on appointment of contractor		
Construction. Supervisor/ Ecological Clerk of Works	To be confirmed on appointment of contractor		
Site Staff & Sub. contractors	To be confirmed on appointment of contractor		

Site and operational timescale

Project working hours shall be limited to 07.30 to 18.30 Monday to Friday and 8.00 to 13.00 on Saturday. No working sundays or public holidays.

Clearance and removal of shrub and trees to be scheduled for September 1st – February 28th (Autumn /winter period) to avoid nesting season as per condition 4 . Work carried out between March and August requires written confirmation to local planning authority to verify that checking for active nests prior to shrub/tree removal has been undertaken.

TRAINING AND COMMUNICATION

Training

All site personnel with environmental responsibilities shall be suitably trained and qualified. If additional specific training requirements are needed, it is the responsibility of the site management to ensure these needs are met at the earliest possible opportunity.

A project specific training plan shall be produced to ensure personnel allocated with environmental responsibilities are competent to carry out their duties.

As a minimum, all staff would receive an environmental briefing as part of their site induction. The induction given to all site personnel shall include a general overview of site specific environmental issues, as well as details of how these issues shall be managed, as Well as personal responsibilities.

Supervisors will support information provided at induction through completing briefings and 'toolbox talks' prior to specific activities commencing. Additional environmental briefings shall be given to all site personnel at a period of no less than fortnightly.

Communication & Consultation

Communication during the construction phase will be vital to co-ordinate activities on site, to inform the general public of the scale of works and to liaise with statutory bodies.

On-site communication will be conducted through two main practices: formal environmental meetings and informal communication. The former will be fortnightly meetings chaired by the site manager and attended by all relevant personnel.

The purpose of these meetings will be to continuously review the environmental management plan and to co-ordinate any short-term activities which pose environmental risk. Minutes will be taken at each meeting and recurring issues will be brought up at each meeting.

Informal communication will occur daily and will inform all staff of recent issues and any environmental risks associated with ongoing construction works.

Public communication will serve to inform local residents and businesses of new or future operations which may have an effect on the public and their surroundings.

Proposals to mitigate any disruptive construction should be communicated effectively to the public to maintain good relations. It will be the responsibility of the site manager to communicate with the public through letter drops and community liaison meetings. Contact details of personnel carrying out the development will also be provided to the public should any issues arise.

Communication with statutory bodies will be required to achieve consent and/or licenses to carry out works.

ENVIRONMENTAL REQUIREMENTS AND CONTROL

The National Planning Policy Framework (NPPF) requires a duty to 'ensure that any unavoidable noise, dust and particle emissions and any blasting vibrations are controlled, mitigated or removed at source. '

The following environmental issues have been identified through the assessment of the granted planning permission including the reports produced by specialists and HTC'S experience. They are cognoscente of the NPPF and are listed in the following table along with receptors sensitive to the issues and environmental considerations and impacts.

Environmental Issue	Receptor	Source	Consequences
Noise	Construction Phase: Construction workers and residents in surrounding property and nearby business and public. Wildlife.	Increased road noise levels from delivery vehicles. Increased noise level from plant during demolition and construction Loud radios and offensive language	Disturbance of local residents Complaints from local residents Delays to site works Disturbance of wildlife particularly at breeding times
	Operation Phase: Future customers and employees of the site. Wildlife.	Noise associated with ongoing Construction Road traffic in streets surrounding the site The operation of goods vehicles supplying nearby commerce Nearby Electrical substation	
Vibration	Construction Phase: Construction workers and residents in surrounding property and nearby business and public. Wildlife.	Increased vibration levels from vehicles. Increased vibration levels from plant during general construction works.	Structural damage Claims in respect to repairs Delay of works
Air Quality	Construction Phase: Construction workers and residents in surrounding property and nearby business and public. Wildlife.	Exhaust emissions (such as NO2) from plant and equipment Exhaust emissions (such as NO2) from construction vehicle movements	Human health Risk (at high concentrations of pollutants) Compensation Claims Damage to water courses Damage to surrounding Flora and Fauna
	Operation Phase: Future customers and employees at the site. Wildlife	Exhaust emissions from local resident and business vehicle movements	
Emissions to Air (Dust)	Construction Phase: Construction workers and residents in surrounding area and public. Wildlife.	Wind Blown dust from site clearance/earthworks Dust derived from compressed mud deposited on the public highway by construction vehicles	

ENVIRONMENTAL REQUIREMENTS AND CONTROL

Environmental Issue	Receptor	Source	Consequences
Ground Contamination	Construction Phase: Construction workers, residents and business' in the surrounding area and public. Wildlife	Discovery of unexpected asbestos and contaminants Creation of preferential pathways and mobilisation of contamination Ground contamination because of Spillages Pollution to land, air water Giant Hogweed is present on the site	Delays to site works Disturbance/damaging of wildlife particularly at breeding times
	Operation Phase: Future customers and employees at the site. Wildlife.	Ground contamination because of spillages from vehicles and produce from store.	
Light Pollution (Ground and Surface pollution)	Construction Phase: Residents and local business in the surrounding area could be affected by light pollution associated with construction and remediation work at the site. Wildlife	Light associated with construction and remediation work Security lights at the site during night time hours Lights left on out of working hours	Disturbance of local residents Complaints from local residents Delays to site works Disturbance of wildlife particularly at breeding times
	Operation Phase: Future customers and employees at the site. Wildlife.	Lights from operations of the proposed store and car parking	
Habitats (on-site)	Construction Phase: Wildlife	Removal of vegetation and potential roosting habitats	Disturbance/ damaging of wildlife and habitats particularly at breeding times
Bats	Construction Phase: Bats	Removal of vegetation and potential roosting habitats	Delays to site works Injury or Disturbance to bats
BIrds	Construction Phase: Birds	Discovery of birds nesting onsite via due diligence check/ ecological clerk of works during nesting season	Delays to site works Injury or Disturbance to birds with the risk of encountering nests during site clearance activities

Environmental Issue	Receptor	Source	Consequences
Hedgehogs	Construction Phase: Hedghogs	No discovery. Low level risk	Disturbance/ damaging of Heghogs. Loss of commuting route
Badger, Otter, Water vole	Construction Phase: Wildlife	No discovery. Low level risk	Delays to site works Injury or disturbance if encountered
Amphibians	Construction Phase: Amphibians	No discovery. Low level risk	Delays to site works Injury or Disturbance to Amphibians

General Mitigation Measures

To minimise the disturbance caused by the potential environmental issues highlighted in the Table above, a list of general mitigations for each issue have been put forward for use.

To minimise the disturbance caused by the potential environmental issues highlighted in the table above, a list of general mitigations for each issue have been established for use in the Appendices with each being titled appropriately.

However, it should be noted that the further site specific assessment for each of the environmental issues identified will be undertaken to ensure that the potential risks are fully understood and appropriate mitigation measures employed.

NOISE AND VIBRATION MITIGATIONS

Construction Phase Mitigation

On site noise levels shall be monitored regularly, particularly when changes in process' are required or in response to complaints. The monitoring shall be carried out in accordance with the HSE guidance set out in Assessing noise risk for larger/ more dynamic sites. Any exposure at or above the upper exposure action value, must take action to reduce noise exposure with planned noise control.

Any compressors or pneumatic tools brought onsite should be silenced with mufflers or sound reduced models fitted with acoustic enclosures.

All construction traffic should follow a specific route as outlined by a Construction Traffic Management Plan as designed by the construction director.

Care will be taken when unloading vehicles to minimise noise and delivery vehicles will be prohibited from waiting within the site with their engines running

All machinery shall be adequately maintained and operated according to manufacturer's instruction in such a manner as to avoid causing excessive noise.

All machinery shall be sited so that the noise impact at nearby noise sensitive properties is minimised.

Sound reducing barriers shall be erected as necessary to shield particularly noisy activities from receptor(s).

Project working hours shall be limited to 07.30 to 18.30 Monday to Friday and 8.00 to 13.00 on Saturday. Particularly noisy activities should be carried out during daylight hours.

Operation Phase Mitigation

See noise report submitted to support planning application **2023/62/91405/W**

NIA/10533/22/10679/v4/Blackmoorfoot Road, Lidl

Please refer to Appendix 1 detailing the standard procedures for noise to be adopted at the site

Please refer to Appendix 2 detailing the standard procedures for vibration to be adopted at the site

AIR QUALITY MITIGATIONS

Detailed air quality mitigations as stated within the air quality assessment by Wardell Armstrong submitted to support planning application **2023/62/91405/W**

General procedures and comments below.

Construction Phase Mitigation

All vehicles and plant machinery must have engines turned off when they are not in use

Catalytic Converters should be fitted on all traffic associated with the construction work

Limiting the speed of site vehicles to 20 mph (not including dump trucks)

Notify Project Manager if work activities are contributing to poor air quality

Operation Phase Mitigation

Emissions to air (Dust)

Unavoidable dust and particle emissions should be controlled and mitigated. Dust suppression methods to be employed throughout the course of the construction.

Construction Phase Mitigations

Topsoil stockpiles should be sealed and seeded

Sheeting of vehicles transporting materials to and from the site

Apply a coarse gravel surface to the haul road, where considered appropriate

Wheel washing facilities at the entrance and exit points of the site (minimise mud on public roads)

Regular use of road sweepers at access points and on local roads (to remove mud from public highways)

Damping down of haul roads, particularly in dry conditions where mud from roads can be crushed by moving vehicles and turned into airborne particulate material

Provision for a project weather station to record data such as wind (speed and direction), precipitation, temperature etc

Please refer to Appendix C detailing the standard procedures to be adopted at the site

GROUND POLLUTION MITIGATIONS

Construction Phase Mitigation

Any spillages created by vehicles/ equipment/ or material to be promptly cleaned and reported to the relevant personal, in which a report should be carried out.

Site staff should be trained in using spill kits and the action to take in the event of a significant spillage

Clear up works to be carried out following any site waste/ litter polluting the site.

Waste stores positioned appropriately throughout the site, if litter escaping increases, litter fencing to be erected where necessary.

Site staff to undertake regular waste/litter inspections to the discretion of the site manager and any areas to be problematic to be brought to the attention of the site manager.

Operation Phase Mitigation

Any spillages created by vehicles/ equipment/ or material to be promptly cleaned and reported to the relevant personal, in which a report should be carried out.

Store staff to undertake regular waste/litter inspections to the discretion of the store manager and any areas to be problematic to be brought to the attention of the store manager.

LIGHT POLLUTION MITIGATIONS

Construction Phase Mitigation

Artificial Site lighting for the demolition and construction works will be sensitivity positioned and directed, avoiding the neighbouring residential buildings where possible.

All lighting to be positioned away from boundary features and into adjacent land parcels. Facing into the construction area only. Ecological Clerk of Works will have a role to ensure lighting is not impacting wildlife areas.

Project working hours shall be limited to 0730 to 1830 Monday to Friday and 8.00 to 13.00 on Saturday. This will prevent the more severe element of intrusion, ie sleep deprivation, being realised.

Lights will be switched off when they are not needed. This will include periods outside of normal site working hours.

Daily checks should be done to ensure no lights left on overnight.

Any security lighting will be kept to a minimum always and powered by mains supply.

Operation Phase Mitigation

Landscape including trees /wildlife areas should remain unlit.

WILDLIFE MITIGATIONS

Construction Phase Mitigation

All contractors working on the site will be briefed regarding the potential presence of Wildlife (Bats, Birds, Hedghogs and Amphibians).

Bats

The Demolition of T1-T2 to be carried out in accordance with the Ecological Biodiversity Impact assessment TG Report No. 15131_R01d_GB_CW

See appendix 4

Birds

During the construction phase, all vegetation works should be timetabled outside of nesting bird season, however during nesting season in the months from March to August, an experienced ecologist will be present at a time of any vegetive clearance to check evidence of active bird nesting.

Due diligence must be shown by all site contractors to check for active nests prior to demolition/ vegetation clearance, even if conducted outside of the 'core' nesting period as some species of bird are known to nest year-round.

If a nest is found the Ecological Clerk of Works will determine a significant buffer zone that will be implemented around the nest commensurate with the species, tolerance of human and stage of nesting. Works can only proceed within the controlled area once the ecologist has determined the nest is no longer active.

See appendix 4

Hedgehogs/ Amphibians / Badger, Otter, Water vole

Low risk level risk of discovery.

Due diligence must be shown by all site contractors to check for activity. If anyis spotted vegetation clearance to be overseen by Suitably qualified ecologist.

See appendix 4

Overnight lighting at the site should be kept to a minimum during construction (see light pollution mitigation).

All chemicals and construction materials are to be safely and securely stored to prevent any spills or contamination.

OPERATIONAL CONTROL

ALL WORK WILL FOLLOW THE NPPF AND HSE GUIDELINES

Every Method Statement and Risk Assessment from all subcontractors shall be reviewed to ensure that they comply with policy and current legislation, no subcontractor will be allowed to start until a Method Statement and Risk Assessment is agreed.

All activities on site shall be reviewed against the requirements of the CEMP via an integrated risk assessment and method statement protocol.

Regular review of the environmental risks associated with the construction process and their respective control measures shall be carried out by all relevant construction teams by referring to on-site method statements.

Mitigation or protection measures that are agreed with statutory authorities shall be implemented prior to the undertaking of any potentially polluting activities and form a basis of 'toolbox talks'

All Method Statements shall be approved by the project manager/relevant specialist. Checking and corrective action

All fauna mitigation methods as stated in the ecological impact assessment to be adhered to following confirmation from site experienced ecologist .

Construction teams using a field inspection sheet shall carry out day to day monitoring of construction activities.

A further, weekly inspection shall be completed by an appointed site manager.

All inspections will be collated into a monthly review of environmental performance by the project manager.

Regular audits shall be completed to ensure the project is compliant with the CEMP, contractual requirements and relevant legislation.

All training of site construction workers should include a health and safety briefing to outline best practice with regards to wearing personal protective equipment (PPE) and how to minimise the risk of accidents.

The site will also employ a Site Waste Management Plan which will describe procedures for the management of waste from construction activities. It will be the responsibility of LIDL to design and carry out the plan.

TREE PROTECTION & CEZ

The protective fencing should be located as shown on the tree protection plan at appendix 6

The precise fencing location may need to be slightly adjusted as per local site conditions, but general idea is fence line to not deviate from what is shown on the tree protection plan. Final fencing position must be agreed and signed off by the Ecological Clerk of Works.

All protection fencing to be in accordance with BS 5837:2012.

The protective fencing to be provided to be 'Heras' type fencing or similar, of welded mesh panels fixed dependant on local site ground condition. Appendix 5. Fencing supports to be on the inner side by the stabilizer struts.

Fencing to be joined using anti tamper couplers fixed at appropriate centres of minimum of two per joining. Installed so they can only be removed from inside the site.

Protection fencing to fixed into solid ground as per Appendix 5 figure 2, any fencing unable to use underground stabilisation must comply with Appendix 5 figure 3 & 4 above ground stabilisation.

The area enclosed by the fencing is referred to as the construction Excluson Zone (CEZ); this area should be considered a restricted area. No pedestrians, vehicles, storage of materals, equipment or machinery should be allowed within the CEZ. The site manager must ensure that all personnel are aware of the restrictions that apply to the fenced-off area.

Warning signs to be added to inside of CEZ placed at appropriate intervals signed off by Site Manager
ensuring appropriate awareness of the restrictions that apply. Appendix 5.

Fencing to be inspected for faults and or damages any areas to be problematic to be brought to the attention of the site manager. Any and all faults/ damages to be repaired or replaced as soon as reasonably practicable.

INVASIVE SPECIES MANAGEMENT

ALL invasive species will be excavated and removed prior to demolition of buildings and ground works.

Any other invasive non-native species to be observed and/or removed by appropriate professional means.

APPENDIX 1
NOISE

1.0 General Requirements

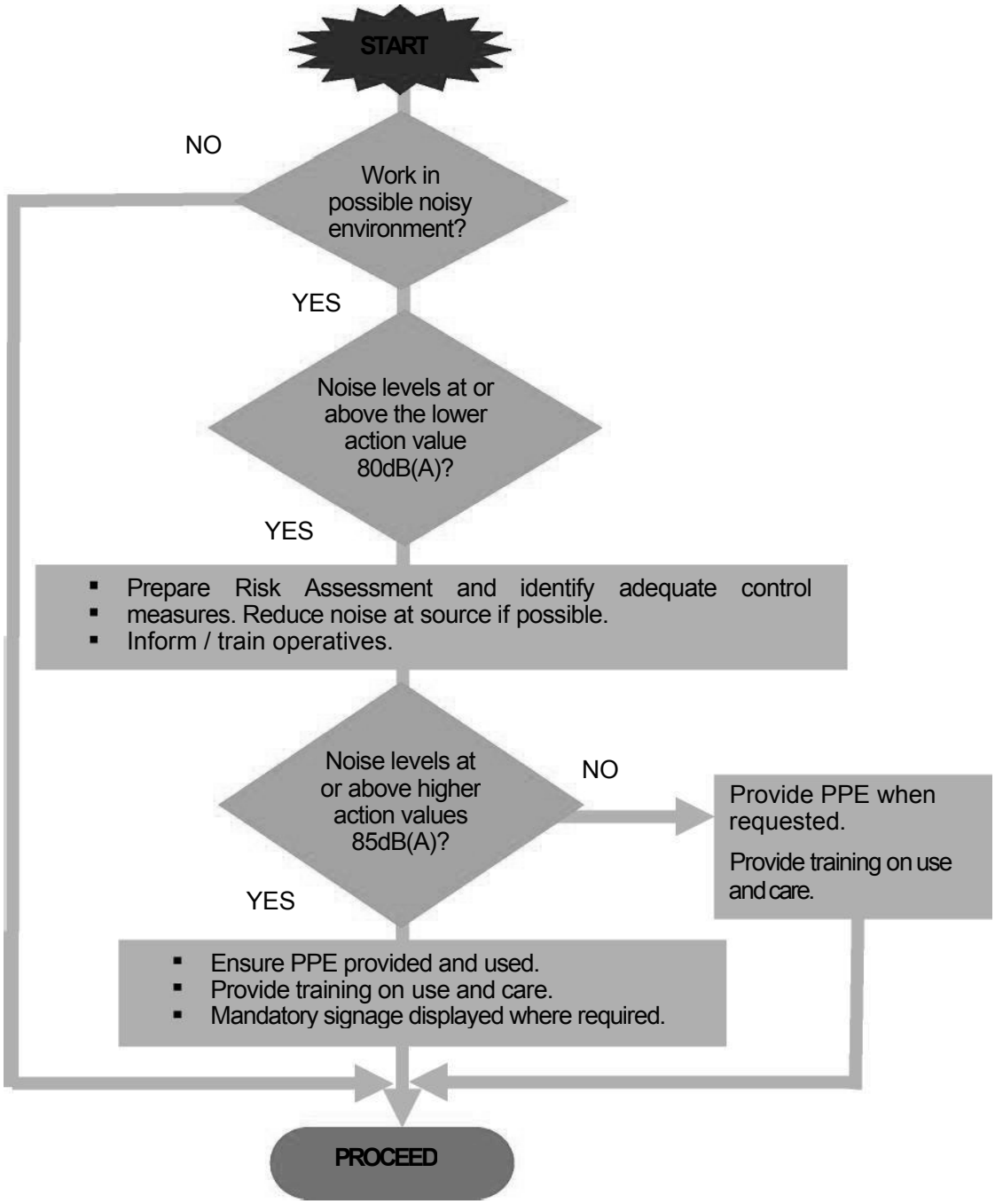

Hearing damage is caused by exposure to loud noise and is permanent and incurable.
It can be caused by exposure to a sudden extremely loud noise like from a cartridge tool.

Damage is more often from prolonged exposure to noise, and the damage caused by noise over the years combines with normal hearing loss due to aging causing hearing loss.

Noise levels are measured in decibels (dB) with an A-weighting used to measure average noise levels and a C-weighting used to measure peak impact or explosive noise levels.

Noise levels double for every increase of 3dB.

Health & Safety Advisors or specialist consultants can carry out noise surveys.

To protect employees' hearing, two exposure action values have been determined by Regulations where action by the employer has to be taken:

Lower exposure action value — 80dB(A) and 135dB(C)

Upper exposure action value — 85dB(A) and 137dB(C)

In addition limits have been set which must not be exceeded:

Daily or weekly exposure limit value — 87dB(A)

Peak exposure limit — 140dB(C)

2.0 Ear Protection

Where noise levels reach to lower action level attempts should be made to reduce the noise and employees must be provided with suitable hearing protection if they request it.

At noise levels between the lower and higher action values hearing protection must be provided and used.

Mandatory hearing protection zones should be clearly defined with warning signs displayed.

Ear muffs and plugs, like any other PPE, should be considered as a last resort and other `engineering' means of reducing or muffling the noise should be considered first.

A range of ear muffs and ear plugs to EN 352 should be available where necessary.

3.0 Health Surveillance & Noise — Group Employees

Pre-employment Assessment: Employees assessed as at risk will receive an audiometric assessment during an Initial Occupational Health screening.

Routine Assessment: `At risk' Employees will generally have their hearing re-assessed every three years.

Operatives experiencing confirmed symptoms of noise induced hearing loss may be referred to a medical practitioner for more detailed audiometric testing.

Anyone suspecting they have been affected by noise will be encouraged to report the condition and get early medical attention.

4.0 Managers should:

Ensure safety documentation addresses the noise hazard.

Identify equipment / operations likely to exceed the first action level and the action to be taken.

When high noise levels can affect other site personnel or the public, appropriate measures must be implemented including:

- Alternative work methods;
- Selection of plant emitting lower noise values;
- Designing out the need for using noise emitting tools or work practices;
- Information and education of workforce to improve understanding of noise related issues and personal protection;
- Reduce noise by technical means e.g. shields, enclosures, isolation or
- damping; Maintenance of equipment;
- Organisation of work regime by reduction of exposure duration & rest
- periods; Or lastly provision of suitable hearing protection.

When buying or hiring equipment obtain noise levels and when these are above the first action level implement appropriate control measures.

The following site activities are considered high risk:

- Stud welding;
- Cutting structural metal decking;
- Floor grinding including Terrazzo;
- Concrete cutting, sawing and drilling;
- Cut off saws;
- Gas and cartridge fired tools;
- Workshop machinery.

Use hearing protection where required

5.0 Plant Selection

- Only use plant which conforms to the relevant standards and directives on emissions;
- Use noise control equipment when operating plant;
- Electrically powered plant is quieter than diesel or petrol powered plant;

Shut down plant when it is not in use;

Maintain plant and tools to reduce noise levels;

Provide effective silencers for plant;

Fix rotating or impacting machines on anti-vibration mountings.

Noise from some types of plant may be emitted more in some directions than others - position the machinery on site to reduce noise emissions to the neighbourhood.

6.0 Noise Screens

Factors affecting the efficiency of an acoustic screen include:

the screen should be positioned as close to the noise source as possible;

the density of the material used (avoid or seal holes / gaps / openings in the screen);

the height and width of the screen;

avoid noise-reflecting surfaces; avoid

sound traps that amplify noise; seal all

gaps and openings.

Generator within noise screen / enclosure

7.0 Nuisance Noise

Noise which is a nuisance to the general public: the Control of Pollution Act 1974 requires contractors to use the best practical means of controlling construction and demolition noise.

Planning conditions may stipulate noise restrictions during construction that need to be adhered to. Background noise monitoring prior to and during the course of the works by a suitably qualified person may be required.

Some construction activities are inherently noisy, for example, piling, and demolition, the use of explosives, breakers and scabbling equipment.

Noise is a major hazard to site workers; it can annoy neighbours and disturb wildlife.

Include noise and vibration considerations in method statements for construction activities.

Address operational noise and vibration issues in design risk assessments for our designed elements of the permanent works

The three factors that can influence noise levels in the community are the site management and construction method, the type of plant used and the use of screening to provide noise attenuation.

APPENDIX 2
VIBRATION

VIBRATION

1.0 General Requirements

Seek to maximise any opportunities to influence the decisions made during the design stage of construction projects to reduce the levels of vibration leaving site or impacting on existing structures. Where possible, vibration will be minimised through design, specification and the use of alternative methods particularly where there are sensitive receptors adjacent to the works, e.g. schools, public areas, sites of special scientific interest (SSSI's) and listed buildings.

2.0 Vibration Risks

High vibration levels over sustained periods can cause damage to buildings, roads and utilities. Lower vibration levels can cause nuisance to residents.

Vibration may also cause disruption to wildlife and damage to geological and archaeological sites.

Vibration is a safety critical issue adjacent to railway lines.

3.0 Evaluate the Potential for Vibration

Some construction activities will cause vibration, eg piling, plant and vehicle movements and the use of explosives.

The transmission of vibration is highly dependent upon ground conditions. Seek specialist advice from contractors / plant suppliers.

Identify what is on or around the site which may be affected by vibration. Obtain dilapidation surveys for sensitive structures.

Liaise with Regulatory bodies and other interested parties including Network Rail, English Heritage, TFL, Environment Agency etc.

Monitor Conditions before Work Starts.

4.0 Mitigate the Risk of Damage from Vibration

Choose appropriate working methods when working adjacent to sensitive areas or structures

Inform Neighbours - consult residents or workers in the vicinity of the works to explain the type and duration of the works.

It might be possible to schedule the work to avoid particularly sensitive times.

Minimise effects during works.

Monitor vibration levels during the works - measure inside rooms when assessing for nuisance; measure the outside of the structure when assessing for damage.

Monitor conditions after works are completed.

Results should be compared to the pre-condition surveys.

CFA piles being installed next to existing buildings causing much less vibration than driven methods

Consider vibration caused by plant and vehicles when establishing traffic management.

APPENDIX 3
DUST

1.0 General Requirements

Dust emissions and odours arising from a site will annoy neighbours and can even cause health risks at high concentrations.

Under the Environmental Protection Act 1990 the Company has a duty to avoid causing a statutory nuisance due to creating dust that may affect the workforce, neighbours and the environment.

Failure to do so is a criminal offence and may result in prosecution and an unlimited fine.

Many activities carried out on site have the potential to create nuisance dust, some of which are as follows:

- Earth works
- Stock piling Site
- traffic Demolition
- Cutting & sawing

It is difficult to suppress dust once it is airborne; therefore it is essential to use measures to stop it being produced. Careful planning and design of construction operations is essential and wind conditions can be a significant factor.

2.0 Control Measures

The following is a list of control measures that can be applied in order to avoid dust emissions:-

- Minimise the accumulation of loose materials on site road by regular sweeping.
- Ensure an adequate supply of water is available for water bowsers.
- Ensure water bowsers are effective and maintained.
- Apply water spray to haul / site roads, earthworks and stockpiles during dry weather.
- Pay particular attention to stockpiles in dry, windy weather.
- Use wet methods of cutting where possible.
- Ensure bulk deliveries /collections are sheeted (where appropriate).
- Impose and enforce site speed limits.
- Suppress and collect dust at source wherever possible, e.g. by using vacuum equipment on woodwork and cutting equipment.

APPENDIX 4
CONSIDERATIONS IN RESPECT OF PROPOSED DEVELOPMENT

Section 4: Considerations in Respect of Proposed Development

Proposals

4.1. The proposals for the site (see **Appendix 2**) comprise the construction of a new LIDL foodstore (Use Class E) with associated access, parking, servicing area and landscaping. The impacts of this in relation to nature conservation sites, habitats and species are outlined below.

Protected Sites

4.2. All statutory sites are considered to be sufficiently distant from the site and would not be impacted as a result of the proposed works due to the distance between them and the site. There are no non-statutory sites within the study area to be considered.

Habitats and Flora

4.3. All habitats on site are considered to be of negligible ecological importance. The loss of these habitats to facilitate the development proposals, will result in a net loss of habitat. A biodiversity net gain assessment has been undertaken based on the current landscape plan **(see Appendix 3)** using Defra 3.1 **(see Appendix 4)** which concludes the site post-development habitats will come at a net loss of -79.8%. It will, therefore, be necessary for off-site contributions to be made to the Local Planning Authority or 3rd-party land owner to create the required deficit of units off-site.

Fauna

Bats

4.4. As European protected species, all UK bats receive legal protection in England under the Conservation of Habitats and Species Regulations 2018 (HabRegs) (as amended) and the Wildlife and Countryside Act (WCA) 1981 (as amended). As such deliberate injury, disturbance or damage/ destruction of a bat or its roost could trigger this legislation, which protects bats.

4.5. Additionally, T1 and T2, categorised as having low bat roosting potential are scheduled for removal. Under current survey guidelines, there is no requirement for further surveys for bats should tree loss be necessary in low potential trees, but mitigation for the removal of these trees, if required, should comprise soft-felling techniques whereby:

- Each tree is climbed and sectionally felled, lowering each limb onto the ground; and
- Each limb is left on the ground for a period of 24 hours before moving off-site/chipping.

4.6. In addition, a sensitive lighting scheme should be created that avoids light spill onto these boundary features and into the adjacent land parcels.

4.7. The proposals also provide an opportunity to enhance the site for roosting bats. Recommendations to this regard are made in **Section 5** of this report.

Breeding Birds

4.8. The proposals would require the loss of habitat of value to nesting and foraging birds through the loss of scrub and trees. The loss of this habitat is however compensated for through the provision of new landscaping which incorporate favourable habitat for nesting birds i.e. native shrub and scrub planting **(see Appendix 3: Landscaping Plan).**

4.9. All wild birds, their nests and eggs are afforded protection under the WCA 1981 (as amended). As such the removal of dense scrub and building works could trigger this legislation, which protects birds while actively nesting.

4.10. Any building works or activity to remove dense scrub or trees within the 'core' nesting bird season (March to August inclusive) should be preceded by checks by a suitably qualified ecologist (SQE), with any active nests found to be left until all chicks have fledged, and a suitable buffer for that species retained until the nest is no longer considered active by an SQE.

4.11. Due diligence must also be shown by all site contractors to check for active nests prior to demolition of the building and vegetation clearance, even if conducted outside of the 'core' nesting period as some species of bird are known to nest year-round. Should an active nest be suspected, a SQE will need to attend site to assess the status of the nest and advise further.

4.12. The proposals also provide an opportunity to enhance the site for birds. Recommendations to this regard are made in **Section 5** of this report.

Section 5: Conclusions and Recommendations

5.1 A biodiversity net gain assessment has been undertaken based on the current landscape plan **(see Appendix 3)** using Defra 3.1 **(see Appendix 4)** which concludes the site post-development habitats will come at a net loss of -79.8%. It will, therefore, be necessary for off-site contributions to be made to the Local Planning Authority or 3rd-party land owner to create the required deficit of units off-site.

5.2 **Bats**: No further nocturnal surveys are required to determine the likely absence of roosting bats however, soft felling of trees identified to have 'low' bat roosting potential will be required prior to removal/works (if required) to ensure no bats are disturbed or injured, with further advice sought from a suitably qualified ecologist if bats are found during these activities. Mitigation for bats should include a sensitive lighting strategy designed and adopted to preserve commuting and foraging routes for bats along the site boundaries and inclusion of bat boxes within the development.

5.3 **Birds**: The sensitive working methodologies outlined in **Section 4** should be adopted during the construction phase of the proposals.

5.4 The following features should be incorporated in the scheme that will also contribute to enhancing the biodiversity value of the site for local biodiversity action plan species:

- Installation of bird boxes on new building;
- Installation of bat boxes on new buildings; and

5.5 Providing the above recommendations are implemented, there are no ecological reasons why redevelopment of the site should not proceed in accordance with relevant wildlife legislation and planning policy, including 'G8 and G9' of the Leeds Core Strategy to protect and enhance the environment.

APPENDIX 5
Protective fencing

Figure 2 **Default specification for protective barrier**

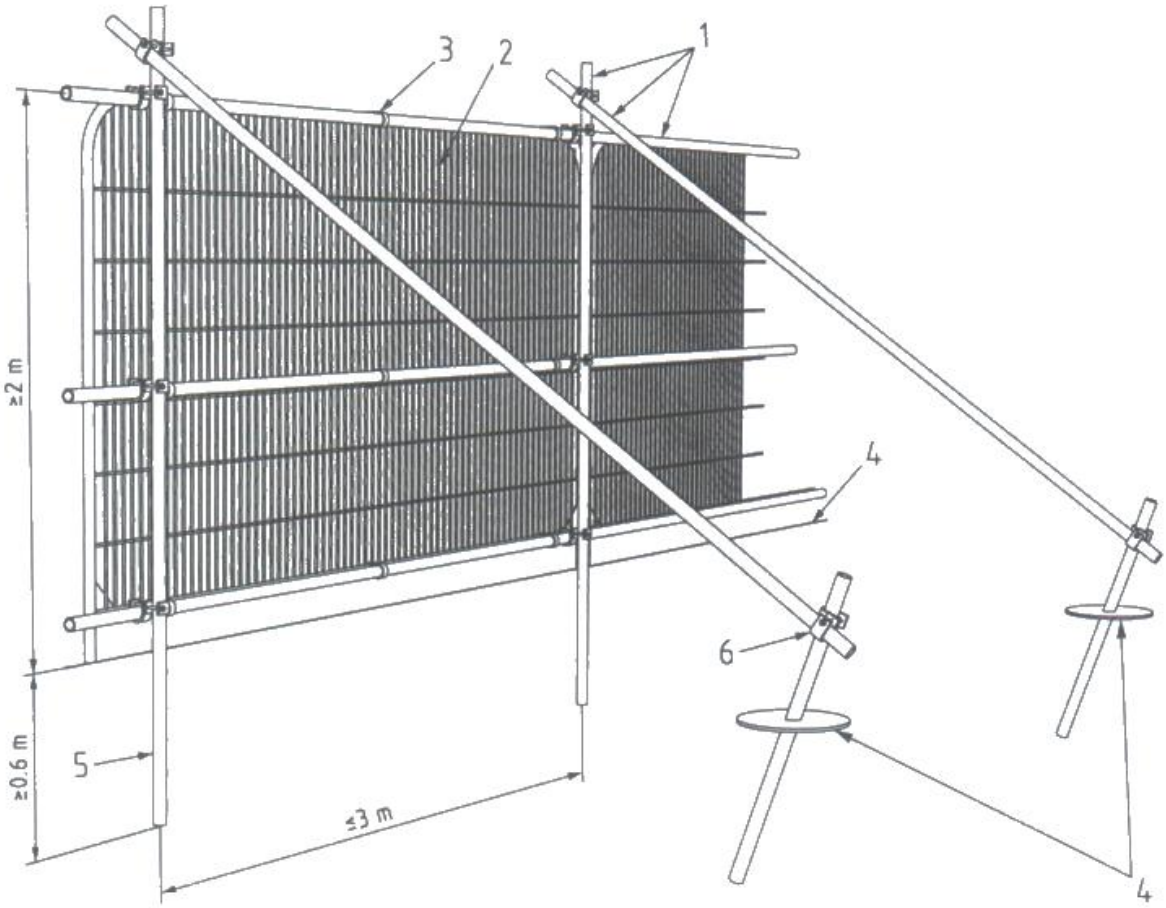

Key

1 Standard scaffold poles

2 Heavy gauge 2 m tall galvanized tube and welded mesh infill panels

3 Panels secured to uprights and cross-members with wire ties

4 Ground level

5 Uprights driven into the ground until secure (minimum depth 0.6 m)

6 Standard scaffold clamps

Figure 3 **Examples of above-ground stabilizing systems**

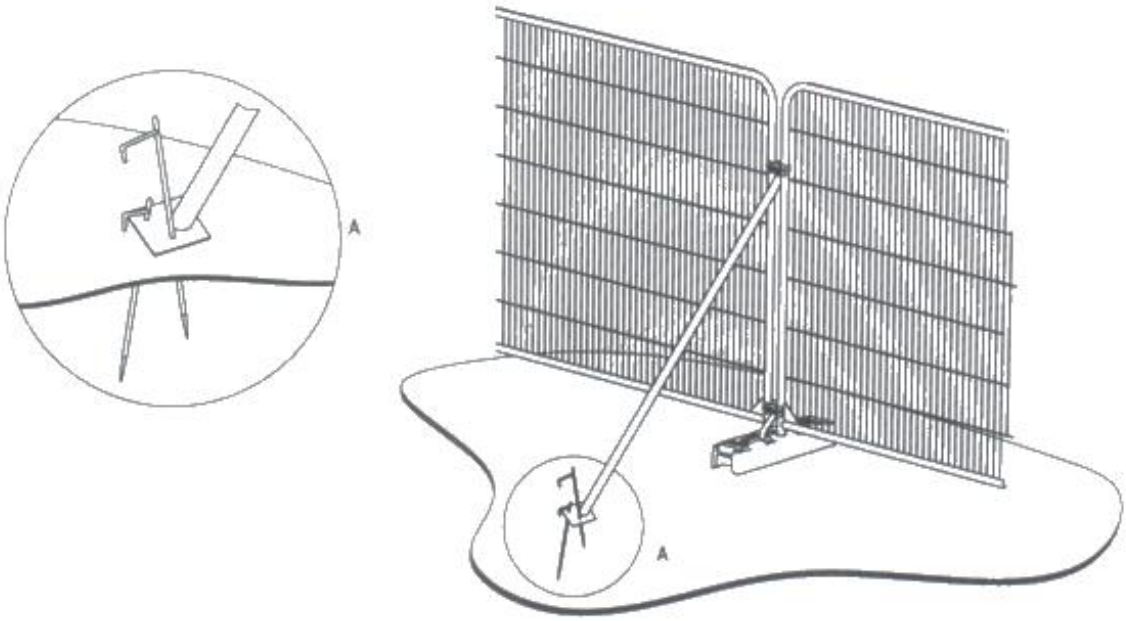

a) Stabilizer strut with base plate secured with ground pins

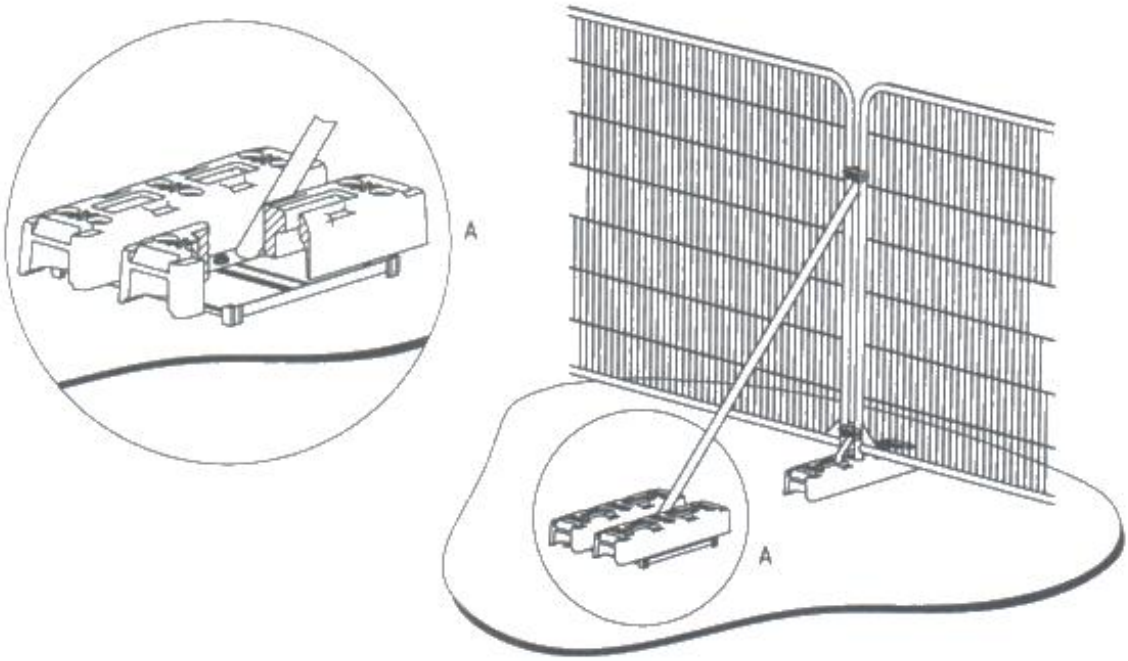

b) Stabilizer strut mounted on block tray

PROTECTIVE FENCING. THIS FENCING MUST BE MAINTAINED IN ACCORDANCE WITH THE APPROVED PLANS AND DRAWINGS FOR THIS DEVELOPMENT.

TREE PROTECTION AREA
KEEP OUT !
(TOWN & COUNTRY PLANNING ACT 1990)
TREES ENCLOSED BY THIS FENCE ARE PROTECTED BY PLANNING CONDITIONS AND/OR ARE THE SUBJECTS OF A TREE PRESERVATION ORDER.
CONTRAVENTION OF A TREE PRESERVATION ORDER MAY LEAD TO CRIMINAL PROSECUTION
ANY INCURSION INTO THE PROTECTED AREA MUST BE WITH THE WRITTEN PERMISSION OF THE LOCAL PLANNING AUTHORITY

APPENDIX 6
AWA - Tree Protection Plan

Warning sign for fencing

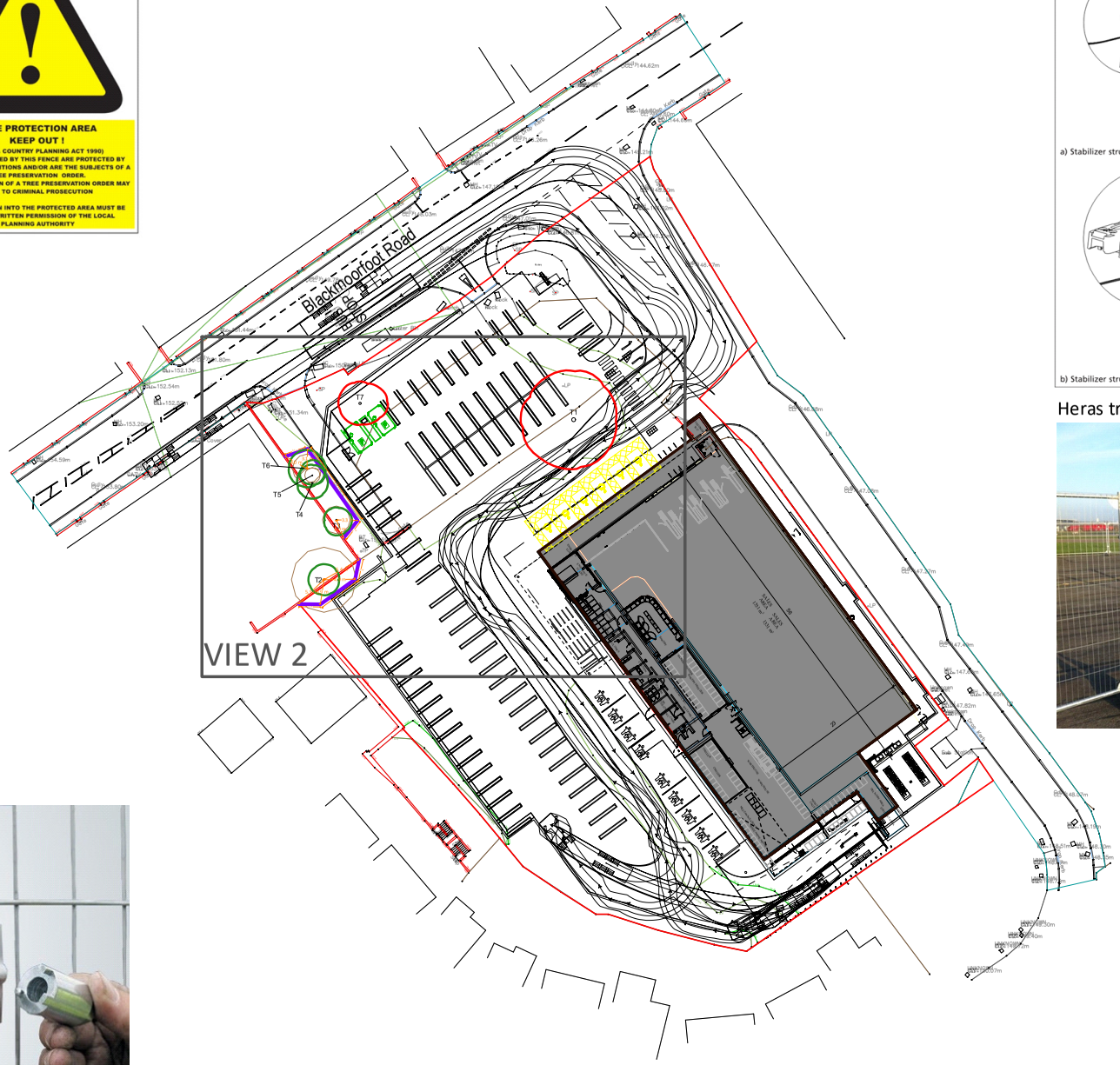

Heras tree protection fencing

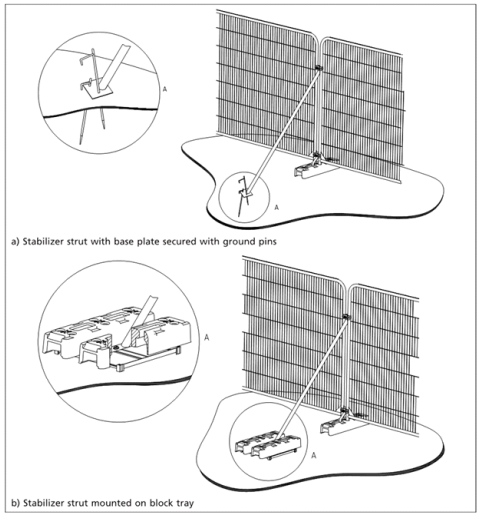

Heras tree protection fencing

Anti-tamper couplers

NORTH

AWA
TREE CONSULTANTS

Appendix 4:
Tree Protection Plan
View 1

Former St Luke's Hospital Site, Blackmoorfoot Road, Crosland Moor
Ref: AWA7011

BRITISH STANDARD 5837:2012

SCALE: 1:500 PAPER: A2

	TREE/ TREE GROUP/ HEDGE TO BE RETAINED
	TREE/ TREE GROUP/ HEDGE TO BE REMOVED
	RPA: ROOT PROTECTION AREA
	TREE STEM
	TREE PROTECTION FENCING

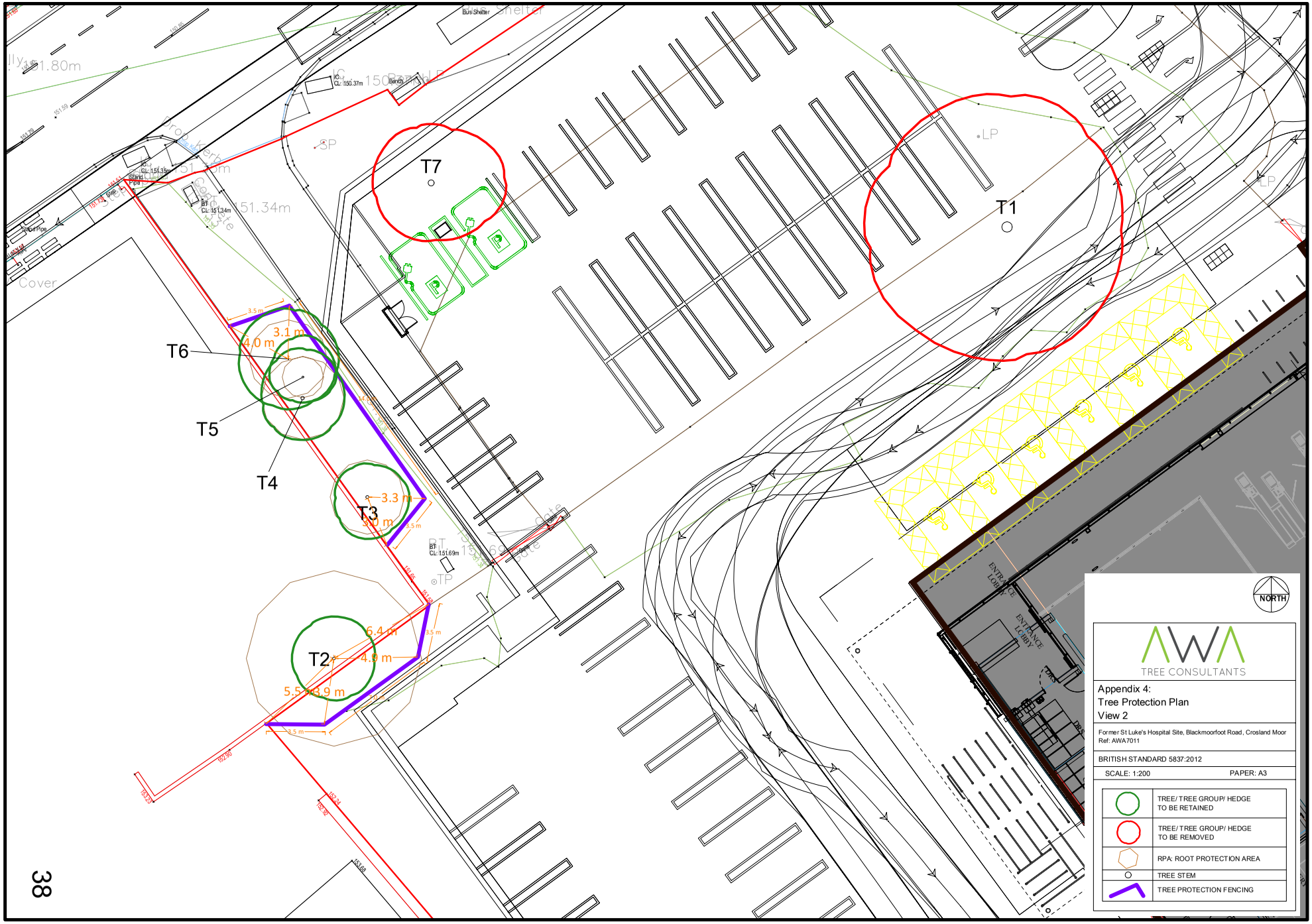
T1
T2
T3
T4
T5
T6
T7
3.1 m
4.0 m
3.3 m
3.0 m
6.4 m
4.9 m
5.5 m
3.9 m
3.5 m
Bus Shelter
Bench
Cover
LP
SP
TP
ENTRANCE LOBBY
NORTH
AWA
TREE CONSULTANTS
Appendix 4:
Tree Protection Plan
View 2
Former St Luke's Hospital Site, Blackmoorfoot Road, Crosland Moor
Ref: AWA7011
BRITISH STANDARD 5837:2012
SCALE: 1:200
PAPER: A3
TREE/ TREE GROUP/ HEDGE TO BE RETAINED
TREE/ TREE GROUP/ HEDGE TO BE REMOVED
RPA: ROOT PROTECTION AREA
TREE STEM
TREE PROTECTION FENCING

APPENDIX 7
Tyler Grange: Habitat Feature Plan

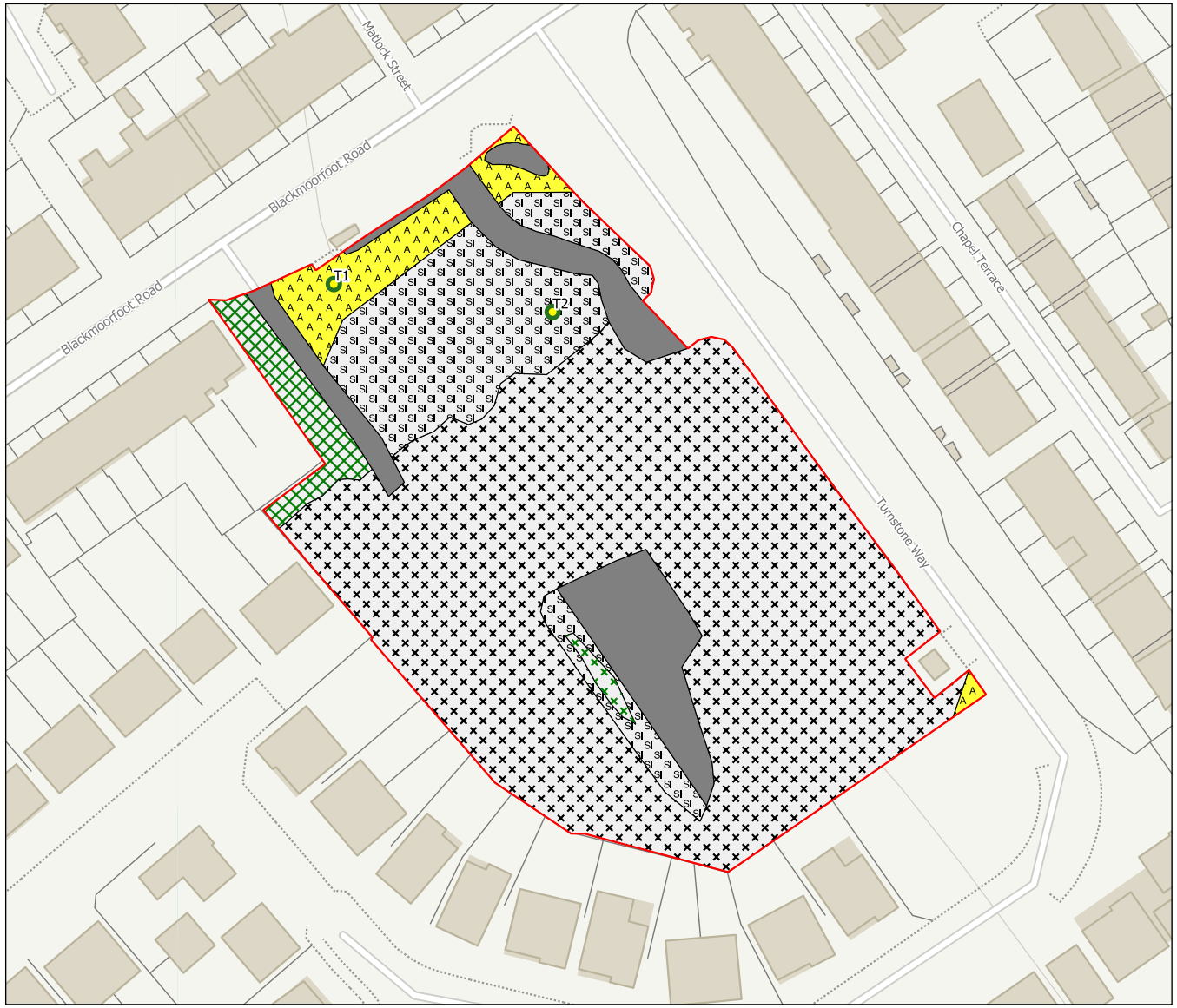

- Redline Boundary
- J1.3 - Disturbed land - ephemeral
- J1.2 - Cultivated land - amenity grassland
- Hardstanding
- B6 - Poor semi-improved grassland
- A2.2 - Scrub - scattered
- A2.1 - Scrub - dense/continuous
- Scattered Trees - Low BRP

N

0 10 20 m

Project	St Luke's Hospital, Blackmoorfoot Road
Drawing Title	Habitat Features Plan
Scale	1:600@A3 (Approximate)
Drawing No.	15131/P01
Date	August 2022
Checked	BP/AS

Tyler Grange

3 Jordan Street, Deansgate, Manchester, M15 4PY
T: 0161 236 8867 E: info@tylergrange.co.uk W: www.tylergrange.co.uk

Tyler Grange Group Ltd
Contains OS Open Data © Crown copyright and database right 2022

York Place Studio,
8 Britannia Street,
Leeds,
LS1 2DZ,
t: 0113 244 3457
e:admin@htcarchitects.co.uk
w:wwwhtcarchitects.co.uk