Table 1 - Manhole Diameter

Diameter of Largest Pipe in Manhole (mm)	Internal Diameter of Manhole (mm)
300 Filter Drains	900
Less than 375	1200
500 to 700	1500
750 to 900	1800
Greater than 900	Pipe diameter + 900

Table 2 - Rocker Pipe Length

Nominal Diameter of Pipe (mm)	Effective Length (m)
150 to 600	0.6
600 to 750	1.0
700 and over	1.25

Table 3 - Compressible Filler and Packing for Pipelines

Nominal Diameter of Pipe (mm)	Thickness of Compressible Filler (mm)
Less than 450	18
450 - 1200	36
Exceeding 1200	54

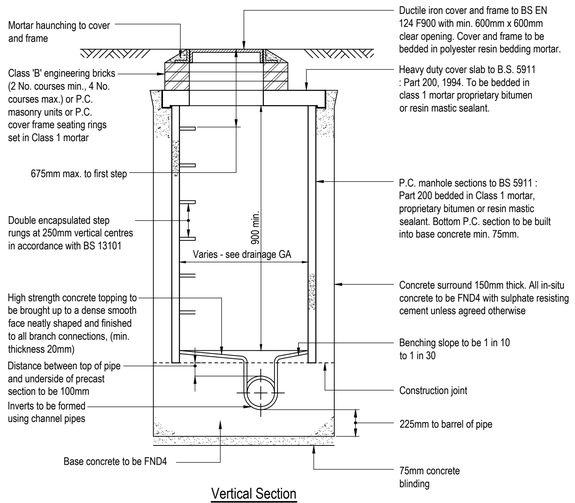

Vertical Section

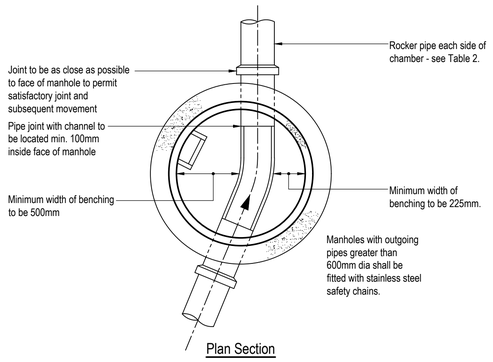

Plan Section

Typical Manhole Detail - Type B

Depth from ground level to soffit of pipe 1.5m - 3.0m

(Scale: 1:25)

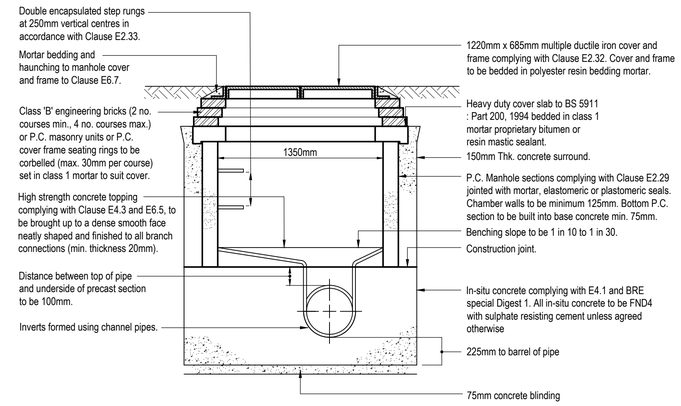

Vertical Section

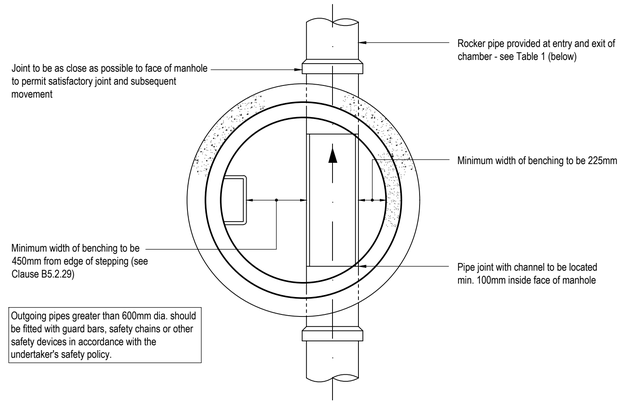

Outgoing pipes greater than 600mm dia. should be fitted with guard bars, safety chains or other safety devices in accordance with the undertaker's safety policy.

Plan Section

Typical Manhole Detail - Type C

Depth from ground level to soffit of pipe 1.0m - 1.5m

(Scale: 1:25)

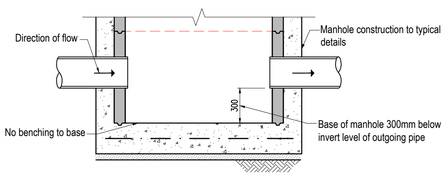

Typical Catchpit Manhole Detail - Type B

Scale: 1:25

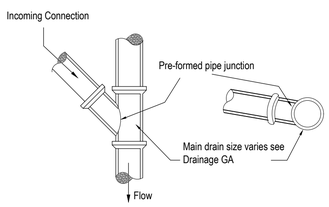

Typcial 'Y' Junction Connection

(Scale 1:25)

Note:
a= $\frac{1}{4}$ B but with a min. of 200mm around the barrels and a min. of 150mm around the sockets

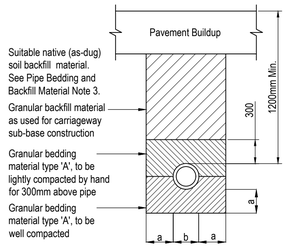

Under Carriageway or Footway

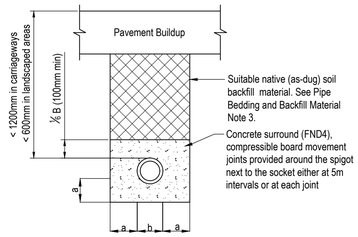

Drainage Shallow Pipe Bedding Detail

Pipe Bedding Details

(Scale 1:25)

Pipe Bedding and Backfill Material Notes

1. Material designated type 'A' shall consist of angular gravel or crushed rock graded in accordance with BS 882, or air cooled blast furnace slag to BS 1047, or sintered pulverised fuel ash to BS 3797, selected according to pipe size as follows:-

Nominal Size of Pipes (mm)	Maximum Particle Size (mm)	Imported Granular Materials
100	10	10mm nominal single-size
Over 100 to 150	15	10 or 14mm nominal single-size or 14mm to 5mm graded
Over 150 to 300	20	10, 14 or 20mm nominal single-size or 14mm to 5mm graded or 20mm to 5mm graded
Over 300 to 600	20	14 or 20mm nominal single-size or 14mm to 5mm graded or 20mm to 5mm graded
Over 600	40	14, 20 or 40mm single-size or 14mm to 5mm graded or 20mm to 5mm graded or 40mm to 5mm graded

2. Material designated type "B" shall consist of suitable native soil (see note 3), graded according to pipe size as follows:

Nominal Size of Pipes (mm)	Maximum Particle Size (mm)
200 or less	22
201 to 600	40
Over 600	60

Note: for pipes with nominal diameter of less than 100mm, all written instructions of the manufacturer shall be complied with.

3. Suitable Native (as-dug) Soil shall consist of uniform, readily compactable material, free from oversized particles, tree roots, waste, organic material, snow and ice, and exclude clay lumps larger than 75mm, as per BS EN 1610:2015 Cl. 5.2 and 5.3. Material to be compacted in 225mm layers.

Note:
At each flexible pipe joint a joint filler (e.g. fibreboard or polystyrene) shall be used (see table below), and shall extend through the full thickness of any concrete in contact with the pipe. The concrete bed shall be cut away at each joint to give a clearance of at least 50mm, so that the joint does not bear on the bed.

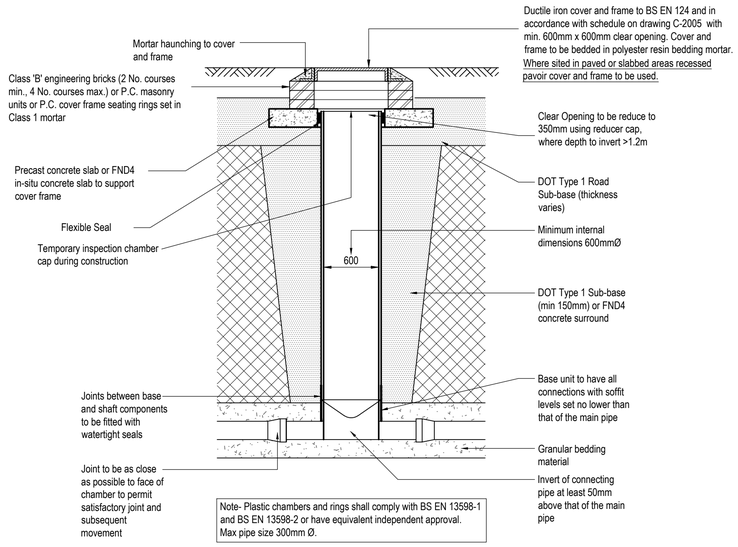

Note- Plastic chambers and rings shall comply with BS EN 13598-1 and BS EN 13598-2 or have equivalent independent approval. Max pipe size 300mm Ø.

600mm Dia Inspection Chamber detail (Flexible Material) in areas subject to vehicle loading (Max depth 3m)

Scale 1:25

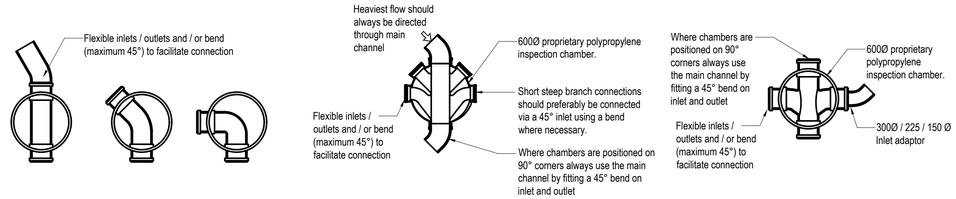

Alternative Base Layouts For 600mm Dia Inspection Chambers

General Notes

1. Where this drawing has been issued in electronic .dwg format, it has been done so in good faith. JNP Group do not take any responsibility for any inaccuracies in the electronic data, which should be checked against the paper (or .pdf) drawing issue. Any apparent discrepancies should be immediately reported to JNP Group. The electronic .dwg file should not be assumed to be to scale and should not be used for 'overlaying', setting out or checking of any third party information. All dimensions should be taken from the paper (or .pdf) version of the drawing. Electronic drawings may contain third party information. JNP Group take no responsibility for this information, which should be checked against the originators paper drawing(s).
2. All dimensions are millimetres (mm), and levels are in metres (m) unless noted otherwise and should be checked on site prior to construction/fabrication.
3. Do not scale from this drawing. Only figured dimensions are to be relied upon. Don't hesitate to get in touch with JNP Group if additional information is required.
4. Any discrepancies between drawings of different scales and between drawings and specifications, where appropriate, to be reported to JNP Group for decision.
5. Copyright reserved. This drawing may only be used for The Client and location specified in the title block. It may not be copied or disclosed to any third party without the prior written consent of JNP Group.
6. This drawing should only be used for construction if the drawing status is "A4 - Approved/Stage Complete". JNP Group takes no responsibility for construction works undertaken to drawings that are not marked with this status.

Health & Safety Note

The details on this drawing have been prepared on the assumption that a competent contractor will be carrying out the works. If the contractor(s) considers that there is insufficient Health and Safety information on this drawing, this should immediately be brought to the attention of the designer.

Rev.	Date	Description	Drn / Chk'd / App'd
P01	28/11/2025	Draft Issue	LC / CS

Suitability:
S3 - Suitable for Review & Comment

JNP GROUP
CONSULTING ENGINEERS
Amersham • Belfast • Brighouse • Bristol
Hartlepool • Sheffield • Warwick
www.jnpgroup.co.uk

Client:
John L Brierley Ltd.

Job:
Turnbridge Mills, Quay Street, Huddersfield

Title:
Drainage Details Sheet 1 of 2

Classification: FI_60_20
Scale @ A1: As Shown

Project - Originator - Volume/System - Level/Location - Type - Discipline - Number: S12097 - JNP - XX - XX - DR - C - 3001
Revision: P01

© Copyright JNP Group Ltd. 2020
JNP Group Internal Project Number: S12097