Roof A Platform 4 Columns
Context

The Huddersfield station Roof A structure is a cast iron and wrought iron / early steel structure which has varying levels of corrosion across large extents of the structure due to its age and levels of exposure to the elements. The structure is to be bast cleaned and the corrosion protection system to be reinstated in a phased nature across the structure.

Along Platform 4 sit eighteen columns which support one side of the Roof A trusses, two of which are cast iron columns and the remainder are wrought iron/early steel compound columns of the same form. Two of these compound columns are to be removed as part of the main works leaving fourteen in place.

- Retained Compound Wrought Iron / Early Steel Column
- Retained Cast Iron Column

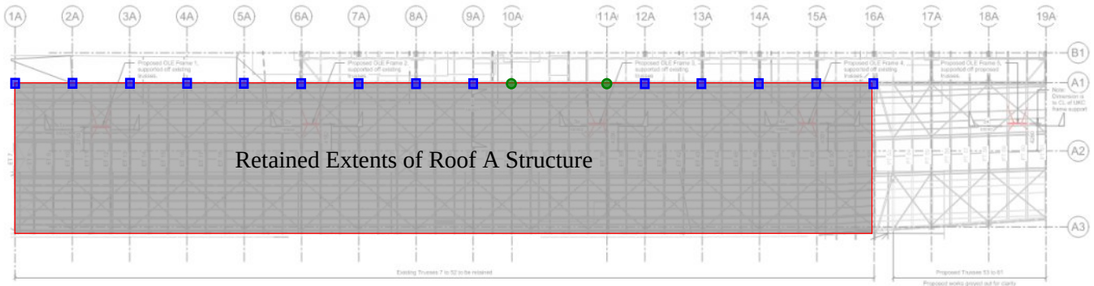

Platform 4 - Retained Column Plan

The cast iron columns to the centre of the structure are in visibly good condition and previous schemes of work have determined that no interventions are deemed likely to be required. The blast cleaning process is unlikely to reveal any significant deterioration, particularly given cast irons lower susceptibility to corrosion from water ingress. No pre-emptive proposals are therefore provided for interventions to the cast iron columns.

Certain aspects of the wrought iron columns have been identified as having historic corrosion (loss of section which has occurred prior to the latest paint protection system application) or locations of current corrosion. Due to the aggressive nature of the blast cleaning process there is view that the extent of section loss in these areas may be increased. Furthermore to ensure the robustness of the corrosion protection system, some locations of thin steel may need grinding back further to a point of sufficient thickness as set out in Network rail specifications.

Due to the time sensitive and phased nature of the works and the potentially lengthy approval time of any remedial works, this sketchbook contains pre-emptive proposals for the remediation of the details, based on the likely extents of section loss following blast cleaning and paint system preparation works.

The proposals are set out against the conservation principles of the wider project. Further details of the approach taken as well as general notes around the remedial principles are set out in sketch 151667-TSA-30-MVL3-SK-S-007. Previous material testing of the roof steelwork has identified that the steel is not suitable for welding and therefore the proposals are set out against this principle.



Platform 4 Compound Column - Context

Huddersfield Station

Roof A - Column Pre-emptive Interventions Proposals Sketchbook

Roof A Platform 4 Columns
Column Interventions Summary

The following is a summary of the identified parts of the column where pre-emptive proposal are deemed appropriate.



C1 - Upper Column Corrosion
(1 Location)

The upper column section within the depth of the longitudinal trusses at the junction of Roof A and the start of roof B was visibly corroded to the outside flange on the exposed edge. This is likely due to the roof junction detailing which may have resulted in rainwater runoff down this column.

See Sketch Page 3



C3 - Column Channel Sawtoothing
(~10 Locations)

The compound columns support Roof A along platform 4 have significant corrosion to the inside flanges of the PFC sections. This primarily relates to the location of the rainwater down pipes.

See Sketch Page 5

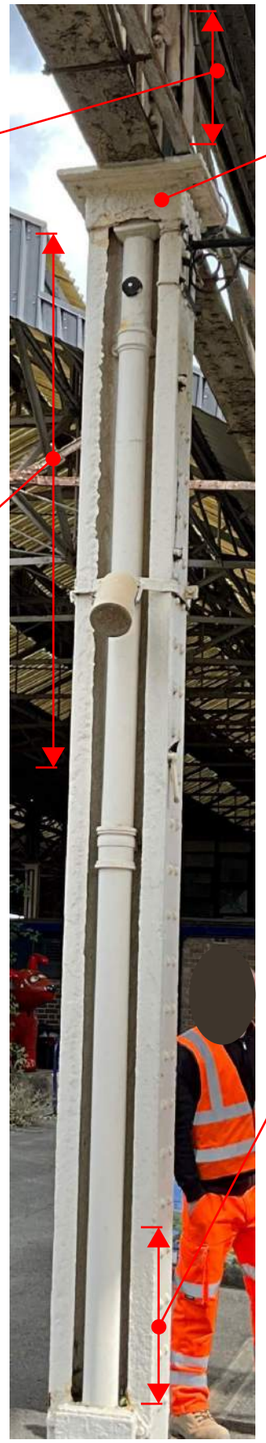

C2 - Column Cap Horizontal plate missing or corroded
(~10 Locations)

The compound columns support Roof A along platform 4 have significant corrosion to the horizontal plates of the column caps primarily relating to the location of the rainwater down pipes.
The horizontal plates have full thickness corrosion and are largely missing, which will be exacerbated by the blast cleaning process.

See Sketch Page 4



C4 - Column Channel Foot Corrosion
(~4 Locations)

The compound columns supporting the Roof A trusses on platform 4 have full thickness corrosion to the PFC flanges where water / debris has pooled around the base. This is particularly prevalent at down pipe location on exposed (edge) columns,

See Sketch Page 6



Huddersfield Station

Roof A - Column Pre-emptive Interventions Proposals Sketchbook

C1 - Upper Column Corrosion (1 location)

This isolated detail has been reviewed and the section loss is deemed to be insignificant to the required capacity of the column from a structural perspective.

In line with the conservation objectives of this project, this element will be retained and repainted with no further intervention beyond the surface and edge treatment noted below.

Works should be undertaken to restore the corrosion protection system to prevent further deterioration and in line with Network Rail Guidance NR/L3/CIV/040 (Specification for the use of protective coating systems) as per the rest of the structure.



Platform 4 upper column at Truss 16

Proposal

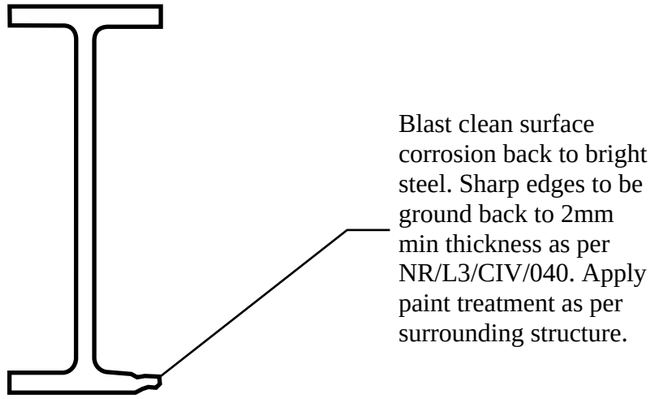

Remedial Sketch for Upper Column Corrosion

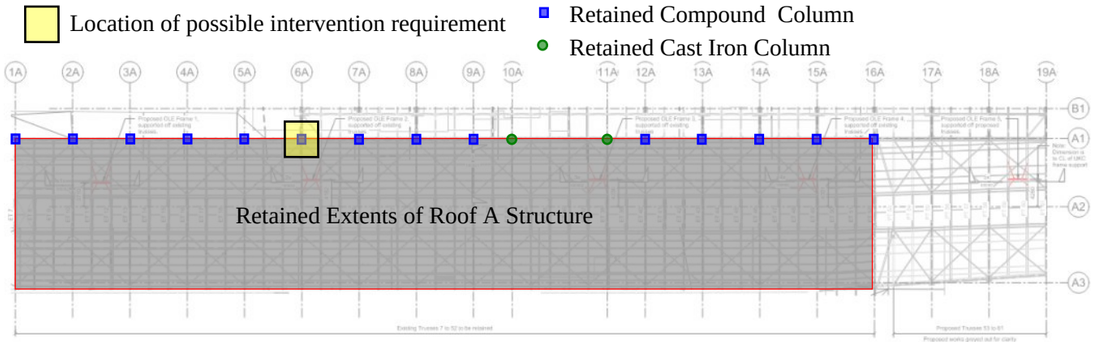

Key Plan

Huddersfield Station

Roof A - Column Pre-emptive Interventions Proposals Sketchbook

TRANSPENNINE ROUTE UPGRADE
ON TRACK TO BETTER

C2 - Column Cap Horizontal plate (Approx 10 Locations)

The column caps along platform 4 has been previously surveyed in Nov ’21 during a weekend possession, which identified the likely cause to be the transfer of rainwater between downpipes via a hopper which would be susceptible to blockages and or overflows.

The horizontal plate was likely of assistance during the erection of the structure as enabling works and is providing some restraint to the channel sections of the compound column below however due to the presence of other fixings in the permanent condition the structural performance of the plate is no longer integral to the capacity of the structure. The cap does visually shields the rainwater hopper detail.

Following the conservation principles of the project, should the section loss extend past a reasonable tolerance, the pre-emptive proposal is to restore the original lines of the structure for aesthetic purposes only. This is to be done in a manor consistent with the language of the existing structure.



Worst cast column cap corrosion



Partial and limited damage examples of column cap corrosion

As above, various conditions of the horizontal plate are present, and shot blasting is expected to cause further section loss where the remaining steel is thin.

Proposal

Where the section loss of the plate is less than 30mm from the original plate profile at narrowest and minimum 3mm of thickness of plate remains, plate to be prepared and treated as per surrounding structure. Where section loss is above these limits, implement below detail.

Proposal (continued)

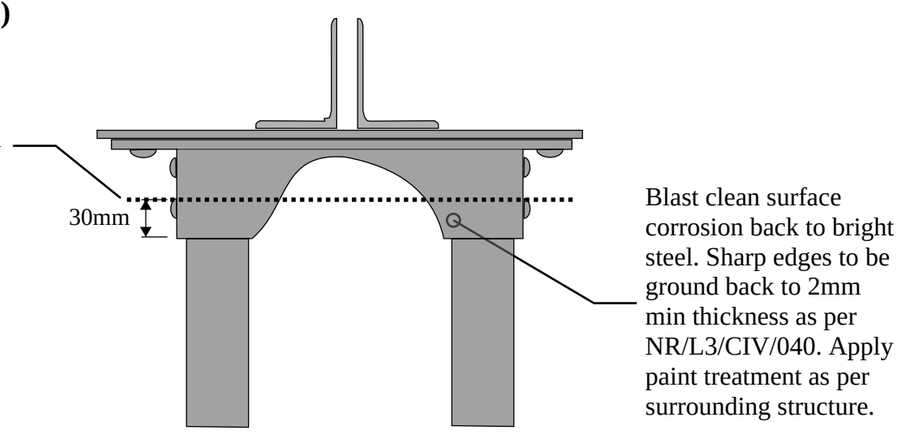

Remedial Sketch for column cap plate - Stage 1

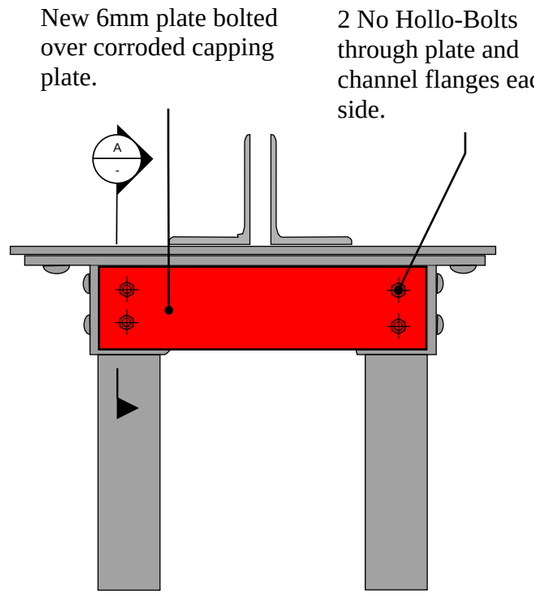

Remedial Sketch for column cap plate - Stage 2

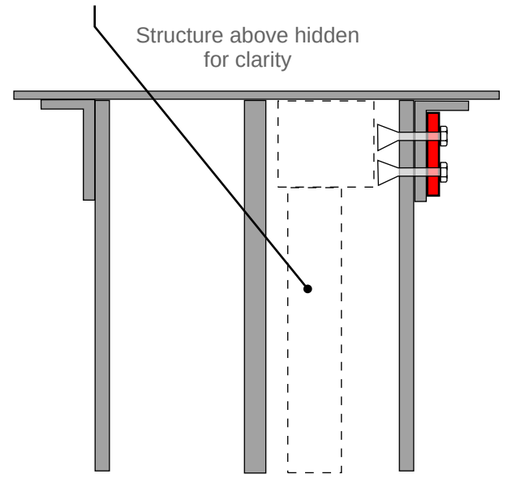

Section A-A

NOTE: As per above, detail assumed hopper and rainwater pipe is to be removed during blast cleaning and painting. Sequencing and reinstalation logistics to be considered in regard to this detail.

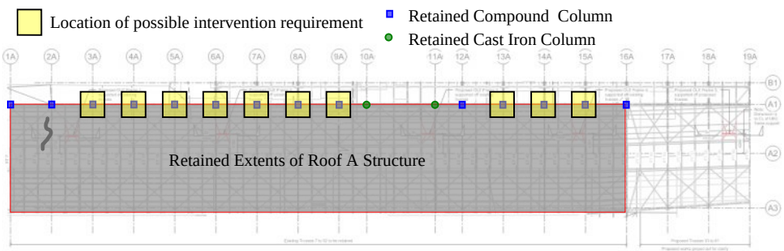

Key Plan

Huddersfield Station

Roof A - Column Pre-emptive Interventions Proposals Sketchbook

151667-TSA-30-MVL3-SK-S-006 Rev P03
Page 4 of 6
Grip 5 / For Information / DHx
06 October 2023

Roof A Platform 4 Columns Intervention Proposals

C3 - Column channel saw toothing ~ 10 locations

This detail has been reviewed and the overall column is deemed to have sufficient capacity to resist the design loads despite the anticipated section loss to the channel section flanges.

For reference we have conservatively assumed the channel flange in question has completely corroded to 50% of its original length (from 76mm down to 38mm) and the remaining flange has lost 2mm thickness to both faces (from 9.5mm down to 5.5mm).

In line with the conservation objectives of this project, the proposed intervention is only considered whereby the corrosion has a significant aesthetic impact on the form and lines of the existing structure. As such, where extent of the section loss is localised to a length of less than 200mm and above a limit of section loss depth of 30mm against the original line of the structure, a cover plate is proposed to maintain the line of the existing structure. is used to determine the level of intervention. Where section loss is less than 30mm from the original line of the structure or where the section loss is over 30mm but consistent along a longer length of the column, then no additional plate is proposed and the structure is to be ground back to a consistent line.

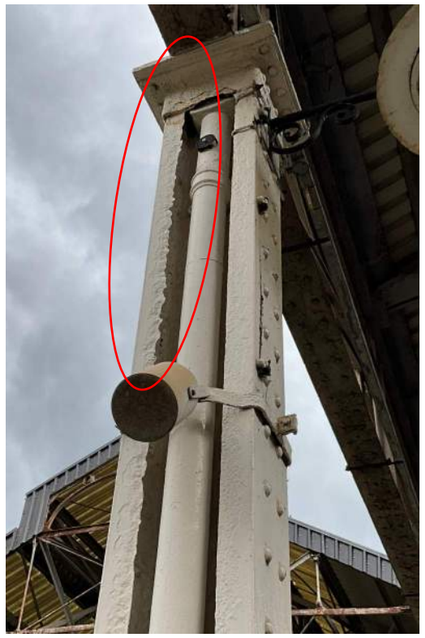



Platform 4 compound column saw toothing examples

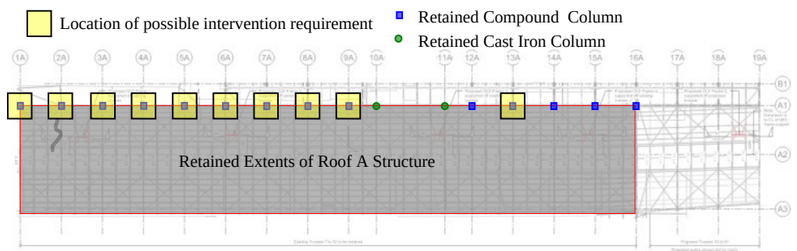

Key Plan

Proposal A: Section loss in line with Aesthetic limit

Works should be undertaken to restore the corrosions protection system to prevent further deterioration as per the rest of the structure.

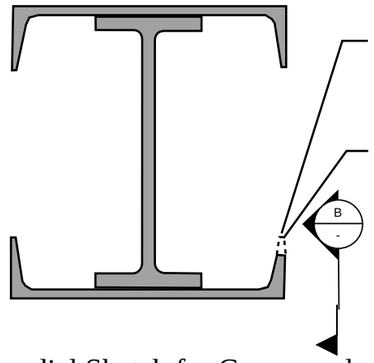

Blast clean surface corrosion back to bright steel.

Grind back steel to minimum allowable thickness for coating as per NR/L3/CIV/040

Section to be ground back to consistent line where possible for aesthetics

Remedial Sketch for Compound Column saw toothing

Dimension limits for which proposal A is suitable

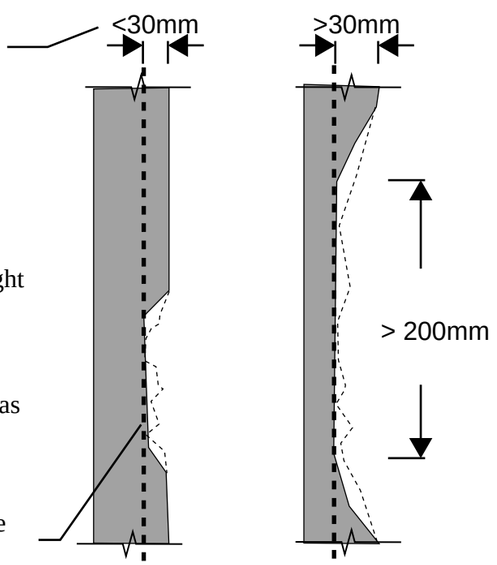

Elevation B - B Situations A1 and A2

Proposal B: Section loss fouls proposed Aesthetic limit

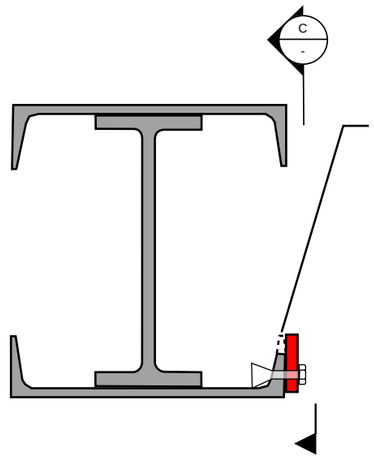

Dimension limit for which proposal B is proposed

Prepare existing steel as per Proposal A

New 6mm plate bolted over corroded capping plate.

2 No Hollo-Bolts through plate and channel flanges each side.

Remedial Sketch for Compound Column saw toothing - Proposal B

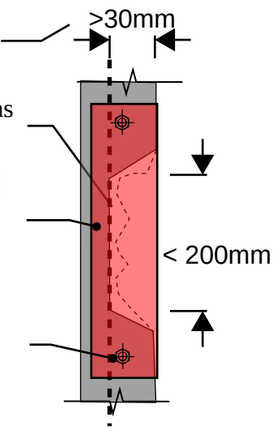

Elevation C - C

Huddersfield Station

Roof A - Column Pre-emptive Interventions Proposals Sketchbook

151667-TSA-30-MVL3-SK-S-006 Rev P03
Page 5 of 6
Grip 5 / For Information / DHx
06 October 2023

Roof A Platform 4 Columns Intervention Proposals

C4 - Column feet corrosion ~ 4 locations

This detail has been reviewed and the overall column is deemed to have sufficient capacity to resist the design loads despite the anticipated section loss to the channel section flanges.

In line with the conservation objectives of this project, the proposed intervention is only considered whereby the corrosion has a significant aesthetic impact on the form and lines of the existing structure. As such a limit of section loss depth of 30mm against the original line of the structure is used to determine the level of intervention.



Platform 4 compound column foot corrosion - Worst case



Uncorroded foot detail

The condition of steelwork below the likely early concrete encasement and behind decorative cast iron detail to base of column is unknown. Should works be identified to be required in this area the outline works principle would be as follows:
-Cast iron encasement to be removed and likely early concrete encasement to be broken out to enable works
-Works to strengthen column section undertaken as required.
-Cast iron encasement reinstated as per original detail where possible and concrete encasement reinstated in new concrete as per original.

Proposal A: where section loss is within proposed Aesthetic

Works should be undertaken to restore the corrosions protection system to prevent further deterioration as per the rest of the structure and as per the proposals for C3 Proposal A.

Proposal B: where section loss fouls proposed Aesthetic limit

Works as per detail below.

NOTE: As per C2 consideration required around rainwater pipe removal during blast cleaning and painting. Sequencing and reinstallation logistics to be considered in regard to this detail particularly around encasement of RWP base.

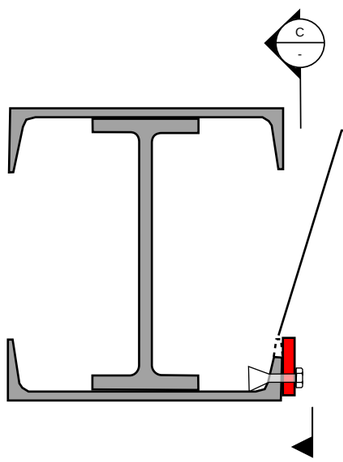

Dimension limit for which proposal B is proposed

Prepare existing steel as per Proposal A

New 6mm plate bolted over corroded capping plate.

2 No Hollo-Bolts through plate and channel flanges each side. Expanding anchor or similar fixing for concrete used for bottom fixing should concrete encasement clash with plate.

Remedial Sketch for Compound Column saw toothing - Proposal B

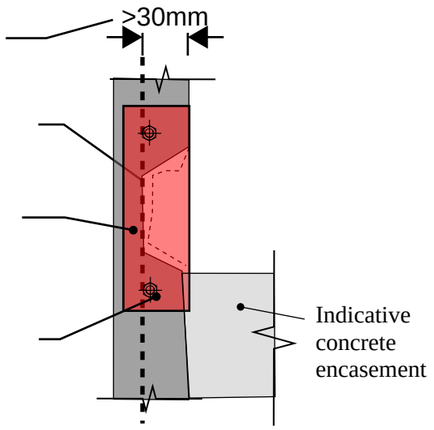

Elevation C - C

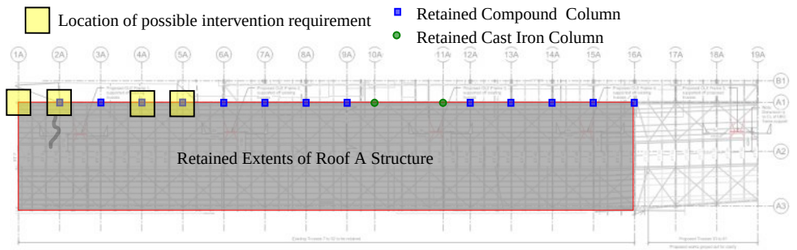

Key Plan

Huddersfield Station

Roof A - Column Pre-emptive Interventions Proposals Sketchbook

151667-TSA-30-MVL3-SK-S-006 Rev P03
Page 6 of 6
Grip 5 / For Information / DHx
06 October 2023