Drawing Number
151667-TSA-40-MDL1-DRG-T-LP-160109 P01

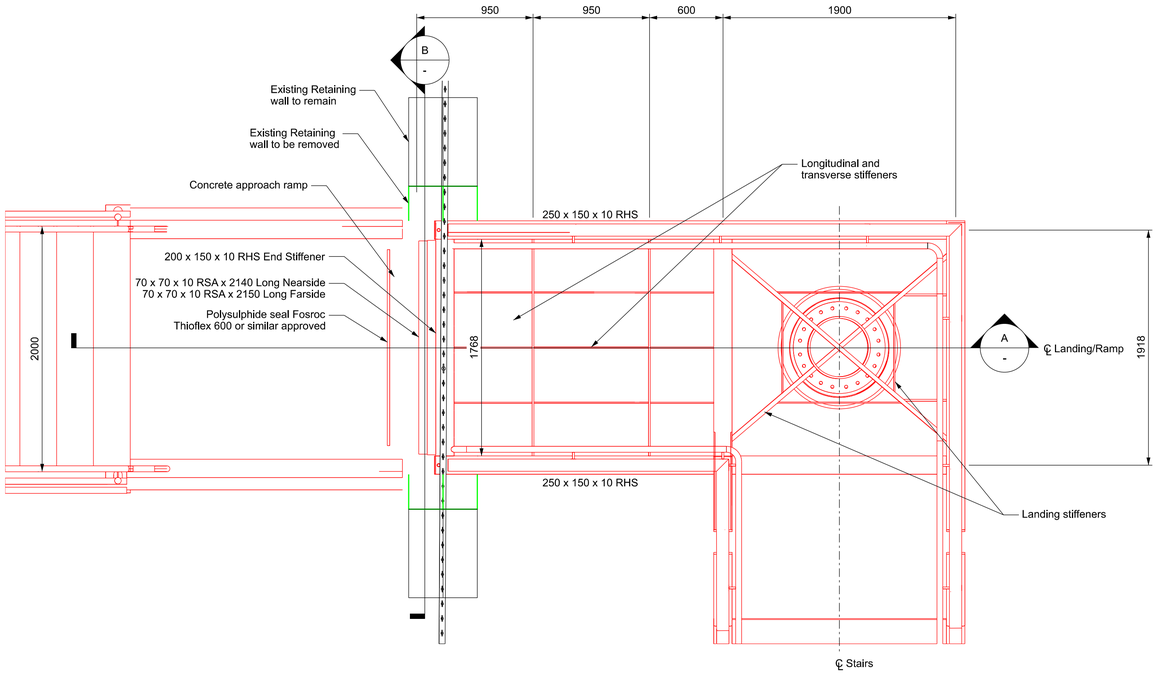

Plan on Ramp End Connection (Deck and Surfacing omitted for clarity)
1:25 @ A1

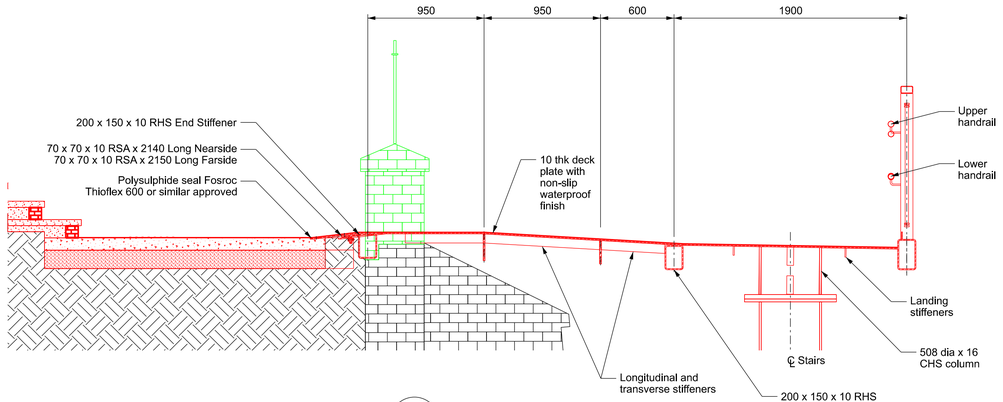

A
-
Section Through Ramp End Connection
1:25 @ A1

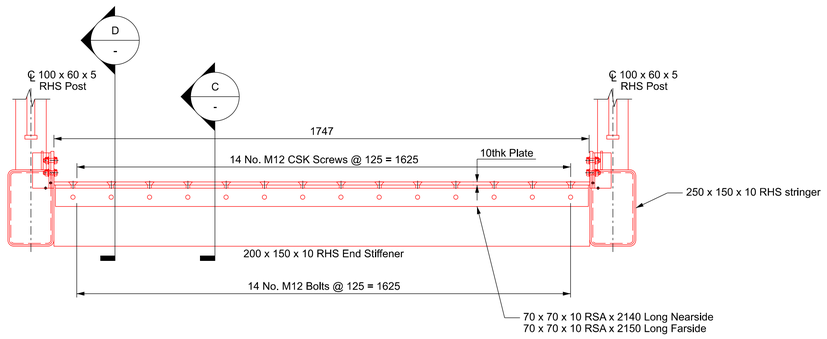

B
-
Section B
1:10 @ A1

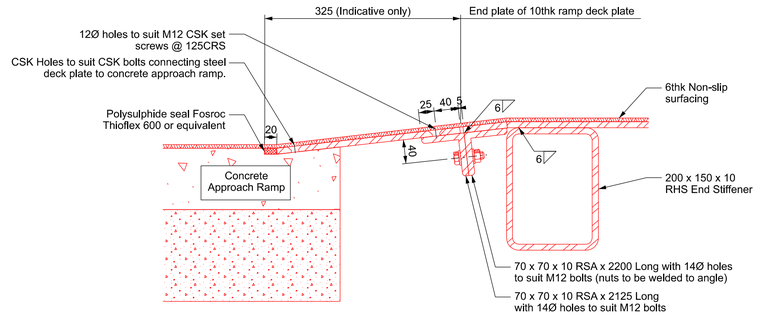

C
-
Section C
1:5 @ A1

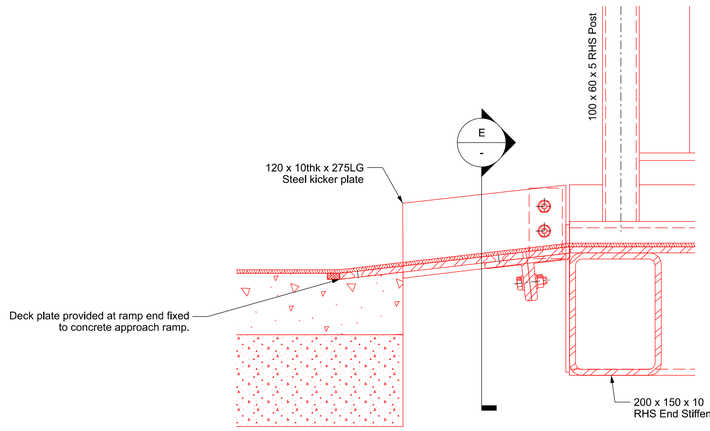

D
-
Section D
1:5 @ A1

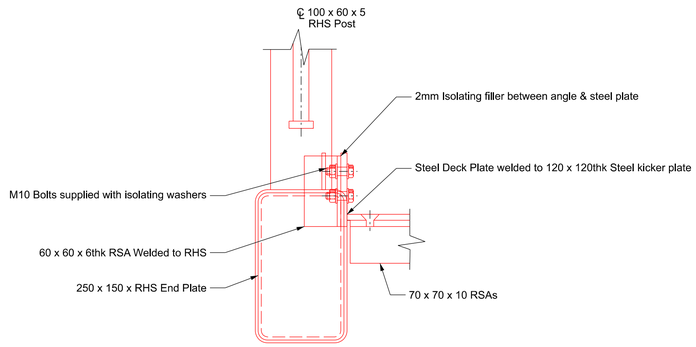

E
-
Section E
1:5 @ A1

Legend/Notes

1) For general notes refer to drawing: 151667-TSA-40-MDL1-DRG-T-LP-160105.

Legend
- Existing Rail infrastructure
- Existing Removed Rail infrastructure
- Proposed Rail infrastructure

0 100 200 300 400 500mm
SCALE 1:5

0 200 400 600 800 1000mm
SCALE 1:10

0 0.5 1.0 1.5 2.0 2.5m
SCALE 1:25

Rev	Date	Description of Revisions	Drawn	Chkd	Appr
P01	20/10/25	First Issue	AF	AM	AM

Status: Fit for Information
Suitability: S2

NetworkRail

Authorised | Signed | Date

Contractor(s): TRU West Alliance

Location: THORNHILL LNW JN - HOLBECK EAST JN (MIRFIELD - LEEDS)

Type: CAD Drawing | Sub-type: Detail

Role: Town and Country Planner | Sub-Role: General

Zone: Dewsbury to Batley - Area A

Phasing: Proposed | Project Stage: GRIP 5

Region: Transpennine Route Upgrade

Contract No.: 151667

Contract Title: TRU - West of Leeds

Drawing Title: Listed Building Consent Dewsbury Station SME P1 Southern - Proposed End Ramp Detail

Designed	A.March	Signed: Electronically Signed	Date: 17/10/25
Drawn	A.Foster-Sims	Signed: Electronically Signed	Date: 17/10/25
Checked	A.March	Signed: Electronically Signed	Date: 20/10/25
Approved	A.March	Signed: Electronically Signed	Date: 20/10/25

Scale(s): As Shown
ELR & Mileage: 33.1406 to 33.1406

Alternative Reference: M123006
Sheet: 1 of 1

Drawing Number: 151667-TSA-40-MDL1-DRG-T-LP-160109
Revision: P01

Sheet Size A1 594 x 841