Typical Manhole Construction

Type A1 (Design & Construction Guidance)

For use on manholes of depth from cover level to soffit level
between 3000mm and 6000mm with ladder and reducing slab
Rigid material construction with concrete surround

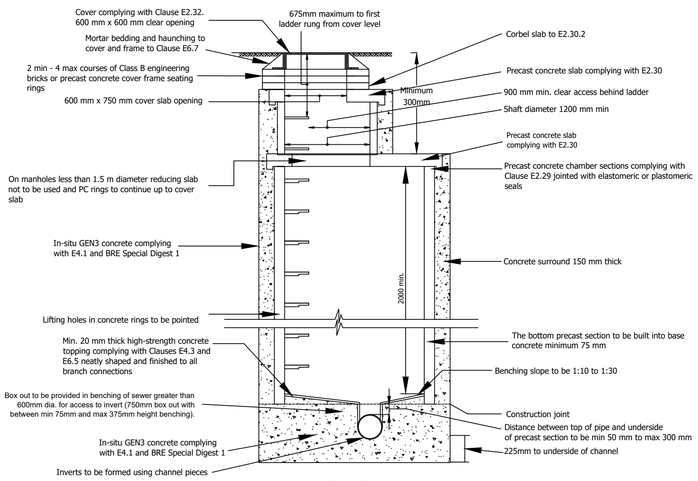

Section View

Typical Manhole Plan View

Type A & B (Design & Construction Guidance)

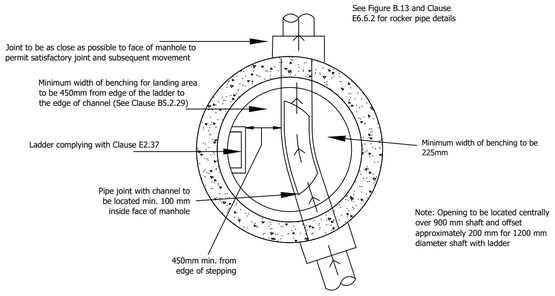

Manhole Diameters	
Nominal internal diameter of largest pipe in manhole (mm)	Minimum nominal internal dimension of manhole (mm)
Up to 300	1200
375-450	1350
500-700	1500
750-900	1800
Greater than 900	Specific detailed drawing required

Typical Manhole Construction

Type B (Design & Construction Guidance)
For use on manholes of depth from cover level to soffit level
between 1500mm and 3000mm
Alternative rigid material construction with concrete surround

ALL PIPEWORK 300mm DIAM OR LESS TO BE VITRIFIED CLAY CONFORMING WITH BS 65. MINIMUM CRUSHING STRENGTHS TO BE AS FOLLOWS: 100mm DIA. 40kN/m, 150mm DIA 40kN/m, 225mm DIA 45kN/m, 300mm DIA 72kN/m.
ALL PIPEWORK 375mm DIAM OR GREATER TO BE CONCRETE CLASS 120, 54kN/m MINIMUM CRUSHING STRENGTH.
ADOPTABLE SEWERS TO BE LAID IN CLASS 'S' GRANULAR BED & SURROUND.

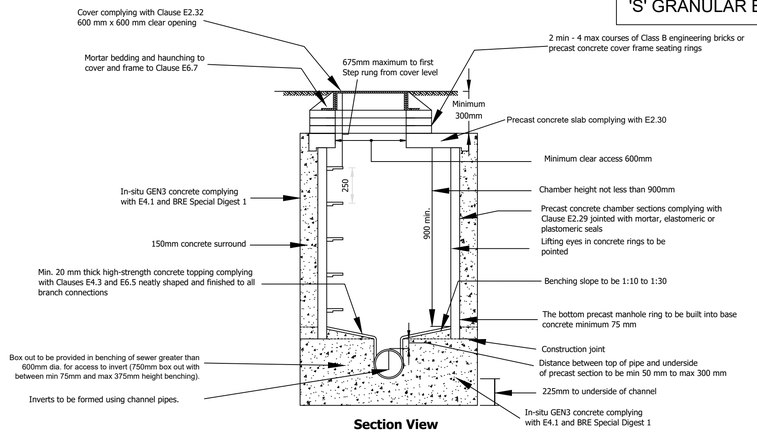

Section View

Shallow Manhole Construction

Type C (Design & Construction Guidance)
Construction of manhole where depth from sofit to
cover level less than 1.5m
Maximum pipe size 450 mm diameter
Rigid material construction

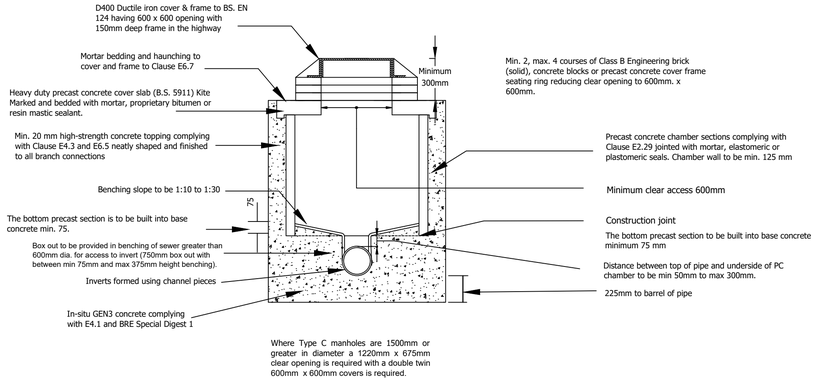

Where Type C manholes are 1500mm or greater in diameter a 1220mm x 675mm clear opening is required with a double twin 600mm x 600mm covers is required.

Shallow Manhole Plan View

Type C (Design & Construction Guidance)

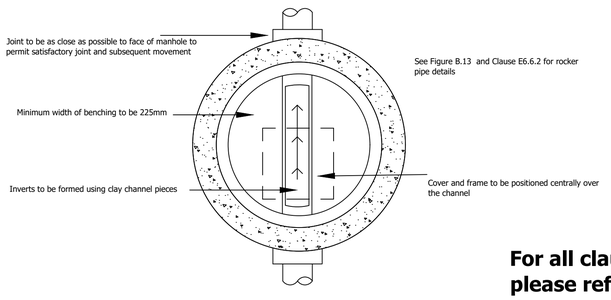

For all clause and table references please refer to Design and Construction Guidance contained within the Code for Adoption 2.0 published 10th March 2020

1. All adoptable sewer works and material to be in accordance with "Code for Adoption 2.0 published 10th March 2020". The Relevant British/European and Yorkshire Water's Standards/Requirements/Addendum to the Mechanical and Electrical Specification and Kitemarked.

2. Manhole covers shall/must have a clear opening of 600mm and shall be Class D400 to BS EN 124 with 150mm deep frames in highways.

3. Filled ground must be filled and consolidated under the supervision and to the satisfaction of Yorkshire Water before any sewer works are carried out.

4. Yorkshire Water is **not** obliged to accept filter drain/land drainage run-off into the public sewer network or adoptable drainage system (**directly or in-directly**). An alternative method of disposal of the land drainage run-off will therefore be required and you will have to liaise with the Local Authority, Land Drainage Section regarding the disposal of the filter drain/land drainage run-off.

5. The adoptable sewers should be a minimum of 1m and manholes 0.5m from kerb faces and service margins.

6. Sewers must have 5 metres clearance from trees and hedges or the width of the canopy at mature height.

7. Sewers to be laid in Class "S" Bedding (**150mm granular bed and surround**). Where depth of cover to top of the sewer is less than 1.2m in highways and verges (**or less than 900mm in nonvehicular access areas**) then a concrete slab should be provided above granular bed and surround.

8. Bedding and backfill material to conform to the requirement of Water Industry Specification 4-08-02 (**Table A2**).

9. Yorkshire Water policy is that Type "C" brick manholes and 1050mm diameter manhole rings are not preferred. Instead, it is preferred that you use a type "B" manhole with 1200mm diameter or 1500mm diameter rings, with the opening sited over the channel where depth of cover to pipe soffit is 1 - 1.5m.

10. Adoptable plastic sewer pipes to be BSI Kitemarked (**certified to WIS 4-35-01** and BS/EN13476). Adoptable plastic sewer pipes to be laid in maximum 3 metre lengths unless there is a specific operational need to lay longer lengths. Plastic channel sections in manholes are not acceptable and Yorkshire Water would require clay ware channel in manholes.

11. The minimum crushing strength for clay pipes should be as follows: 100mm dia. 40KN/m, 150mm dia. 40KN/m, 225mm dia. 45KN/m and 300mm dia. 72KN/m. The minimum crushing strength for concrete pipes should be - (Class 120 to EN 1916/BS5911-1 2002). Plastic pipes should conform to WIS 4-35-01 and BS EN13476.

12. Where a B125 cover and frame has been approved, this **must not** be coated in plastic and must have lifting eyes suitably sized to accommodate standard lifting keys. Screw down covers are not acceptable.

13. There must be enough clearance at crossovers to accommodate bedding to both pipes, approx. 300mm : if crossover is near the rocker then the clearance needed may need to be increased.

14. Cover slabs must carry the BSI kitemark and British Standard number or will be rejected by Yorkshire Water inspector. Where the clear opening of the kitemarked product is different to that of the cover and frame, a loading bearing slab should be fitted above the cover slab to bring the size down to 600x600mm for the yorkshire water specified cover size. Please refer to concrete pipe systems association (cpsa), 'technical bulletin' issued autumn 2004 for kitemarked cover slab opening sizes.

15. All highway works and material to conform with Kirklees MDC specification.

16. Gully cover and frames shall be D400 ductile iron and comply with European standard BS EN 124. Those sighted in accessways and mews courts must be suitable for use in pedestrian areas.

17. Precast concrete manhole units and their components shall comply with the relevant provisions of BS EN 1917 and BS 5911-3 and shall be manufactured from concrete with a Design Chemical Class DC-4 unless satisfactory evidence through soil analysis can be provided that a lower class will resist attack from soils and ground water.

18. Precast concrete manhole components shall comply with the relevant provisions of BS EN 1917 and BS 5911-3.

19. Corbel slabs shall comply with the requirements of BS 5911-3:2010+A1:2014 Table 5 and Figure 8.

20. Cover slabs should be installed with a minimum 300mm cover to finished levels to comply with National Specifications.

RISK ASSESSMENT: SIGNIFICANT RISKS THAT CANNOT BE DESIGNED OUT		
RISK	LEVEL OF RISK (H/M)	SUGGESTED ACTION
DEEP EXCAVATIONS ASSOCIATED WITH NEW DRAINAGE WORKS	HIGH	ENSURE ALL EXCAVATIONS HAVE ADEQUATE TRENCH SUPPORTS
HANDLING LARGE DIAMETER MANHOLE RINGS AND CIRCULAR PIPES	HIGH	USE CORRECT LIFTING EQUIPMENT AND ENSURE OPERATIVES WEAR APPROPRIATE PROTECTIVE CLOTHING/HARD HAT/&CORRECT PPE
CONTACT WITH SEWAGE	MED	OPERATIVES TO USE CORRECT BREATHING EQUIPMENT/CORRECT PPE
NOISE	MED	OPERATIVES TO USE CORRECT EAR PROTECTION/CORRECT PPE
DRAINAGE EXCAVATIONS ADJACENT EXISTING BOUNDARY STRUCTURES	HIGH	ENSURE CORRECT SUPPORTS ARE PROVIDED TO TRENCHES AND BUILDINGS WHERE REQUIRED
DRAINAGE EXCAVATION IN PUBLIC HIGHWAY	HIGH	ENSURE CORRECT USE OF TRENCH SUPPORTS IN EXCAVATION AND SCREEN BARRIERS TO PROTECT MEMBERS OF THE PUBLIC
MAINTAIN ACCESS TO ADJACENT PROPERTIES AND OCCUPIERS	HIGH	ENSURE WORKS ARE PROTECTED WITH BARRIERS AND SIGNS TO GUIDE THE PUBLIC AWAY FROM THE WORKS
DRAINAGE EXCAVATIONS NEAR TO EXISTING SERVICES	HIGH	ENSURE WORKS ARE PROTECTED WITH BARRIERS AND SIGNS TO GUIDE MEMBERS OF THE PUBLIC AWAY FROM THE AREA
WORKING IN CONFINED SPACES. WORKING IN DRAINS AND MANHOLES	HIGH	CONFINED SPACES WORKING TRAINED PERSONNEL ONLY TO CARRY OUT WORKS UNDER A PERMIT TO WORK SCHEME IMPLEMENTED BY CONTRACTOR. GAS TESTING TO TAKE PLACE BEFORE ALL ENTRIES TO CONFINED SPACES.
WORKING IN HIGHWAYS / RISKS FROM VEHICLE AND PLANT	HIGH	ALL WORKS TO BE SIGNED AND FENCED FROM NORMAL VEHICULAR TRAFFIC. ALL WORKERS TO WEAR HIGH VISIBILITY CLOTHING. ALL PLANT TO HAVE VISUAL AND AUDIBLE WARNING SYSTEMS.
ROAD AND DRAINAGE CONSTRUCTION	HIGH	ALL EXCAVATIONS TO BE ADEQUATELY FENCED OFF AND SUPPORTED DURING CONSTRUCTION. ALL OPERATIVES TO BE TRAINED IN CORRECT METHODS OF LIFTING AND WORK IN ACCORDANCE WITH LOLER REGS
IT IS ASSUMED THAT WORKS ASSOCIATED WITH THIS DESIGN WILL BE UNDERTAKEN BY A PERSON OR PERSONS WHO ARE COMPETANT AND HAVE THE REQUIRED LEVEL OF EXPERIENCE AND EXPERTISE		

Rev	Description	Date	Initials
-	-	-	-

Haigh Huddleston & Associates

Civil Structural Engineering Consultants

Firth Buildings, 99 - 101 Leeds Rd, Dewsbury, WF12 7BU t 01924 464342 f 01924 450662

e martin@haighhuddleston.co.uk

Client
MICHAEL GRAVES

Project
294 - 298 WHITECHAPEL ROAD, CLECKHEATON

Detail
STANDARD MANHOLE DETAILS

Dwn	Chkd	Date	Scale	Dwg No.
JF		APR'2025	NTS	E21/7893/006_01

PRELIMINARY