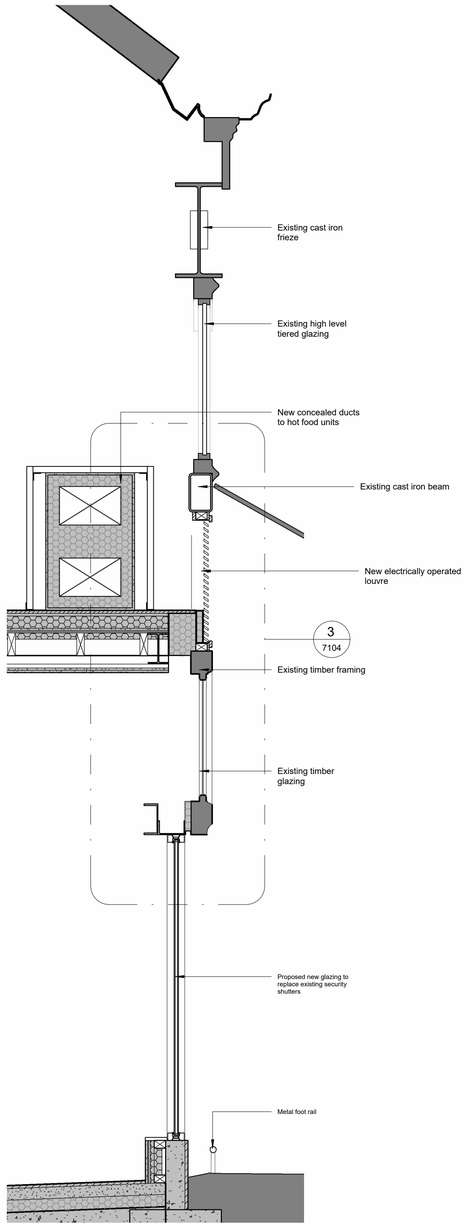

1 Opening Louvre Section
1 : 20

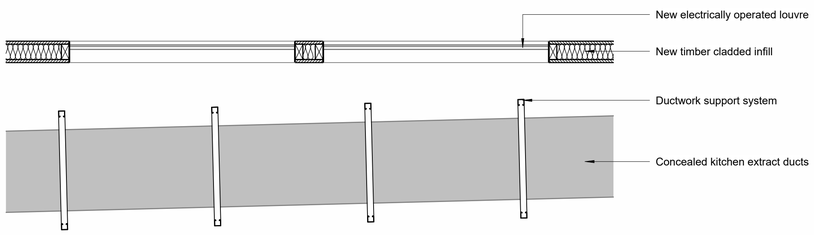

2 Opening Louvre Plan
1 : 20

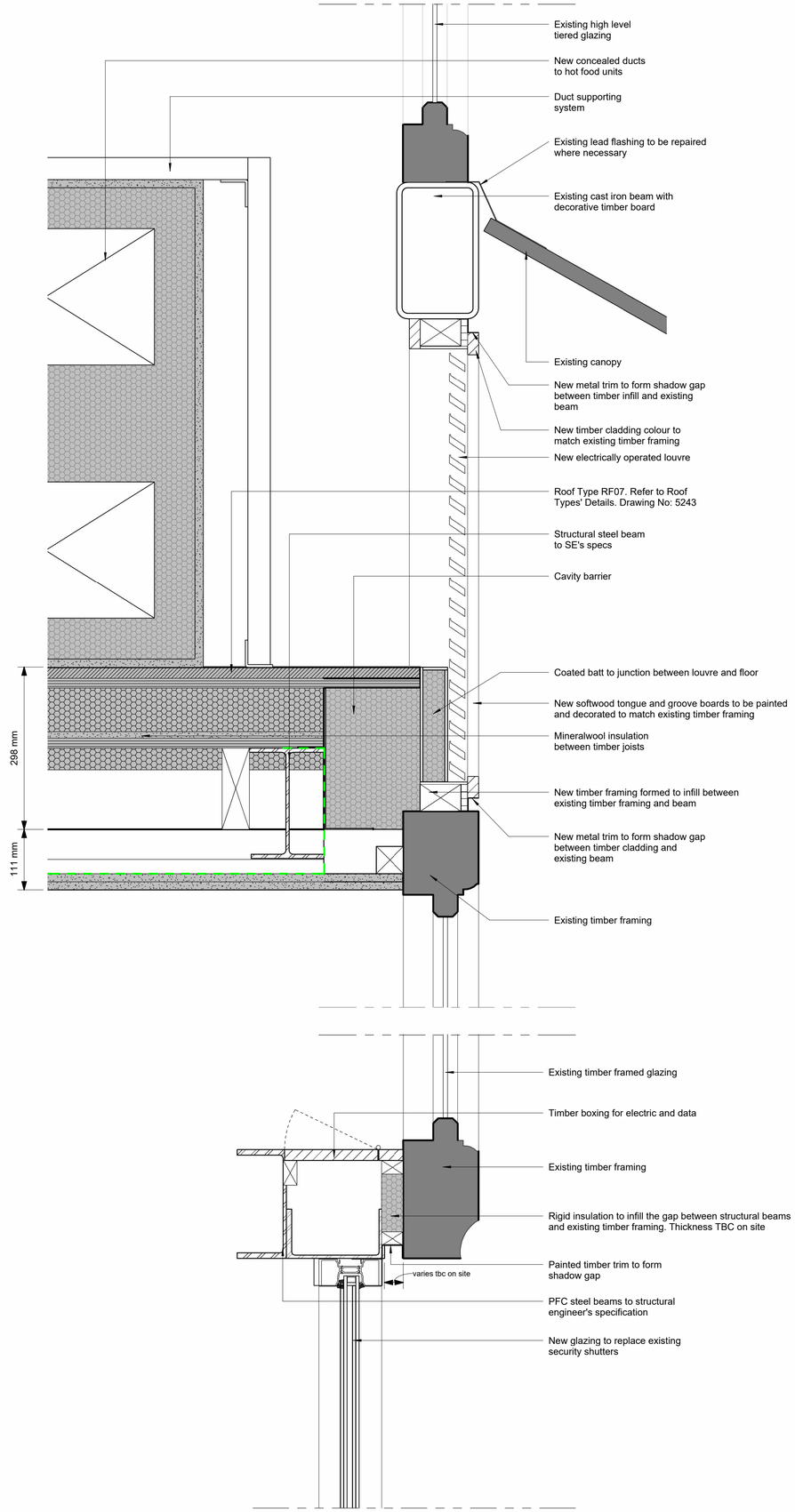

3 Opening Louvre Detail Section
1 : 5

0m 0.4m 0.8m 1.2m 1.6m 2m
SCALE 1:20 @ A1

Do not remove this panel from this drawing. Do not scale from this drawing. All dimensions and levels are to be checked on site. All discrepancies, errors and omissions must be reported immediately to Greig and Stephenson Ltd. The contractor is responsible for setting out, checking and confirming all site conditions prior to fabrication and construction. All building and fabrication works are to be carried out in accordance with the Local and National Building Codes, practices and standards. This drawing is copyright and must not be reproduced without the written consent of Greig and Stephenson Ltd. Greig and Stephenson Ltd. accept no responsibility for any loss or expenses arising from use of this drawing for any purpose other than those agreed in writing by Greig and Stephenson Ltd. This drawing is not to be used by any third party without the written consent of Greig and Stephenson Ltd.

REV	DATE	COMMENT	DRW | APRV
P01	28/08/25	Issued for Planning	CS/SS NM

Greig & Stephenson Architects
Studio SW.201, Screenworks
22 Highbury Grove
London, N5 2ER
tel. 020 7403 5511
fax. 020 7403 5544
email. info@gands.co.uk

CLIENT: KIRKLEES COUNCIL

PROJECT: HUDDERSFIELD MARKET

STATUS: S3 - FOR REVIEW AND COMMENTS

DRAWING: **External Façade Interface Typical Opening Infill System**

SCALE	DRW | CHKD	RVW | APRV	DATE
As indicated @ A1	SS NM	NM NM	31/05/24

DRAWING NUMBER: HMH-GSA-MH-XX-D-A-7104

REVISION: P01