## Window ref

W007, 008, 009, 010, 011, 012, 013

W107, 108, 109, 110, 111

WA014, 015, 016, 017, 021, 022

WA102,103, 104, 105, 106, 108, 109, 111, 112, 113, 114, 115, 116, 117, 118, 119*, 120*

*for windows WA119 & 120, reuse stained glass detail to lower section

## Notes

### General

- Window and frame to be knot blocked with suitable primer & finished with gloss finish - colour TBH
- Refer to plans / Window schedule for location of window, window references

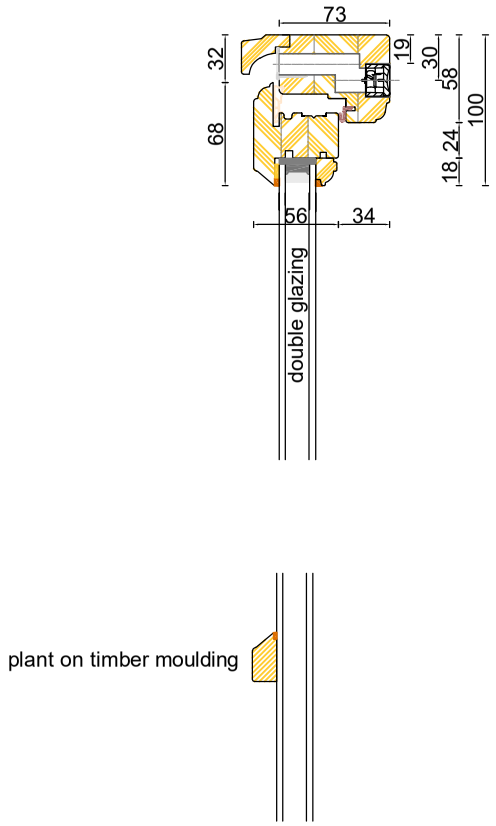


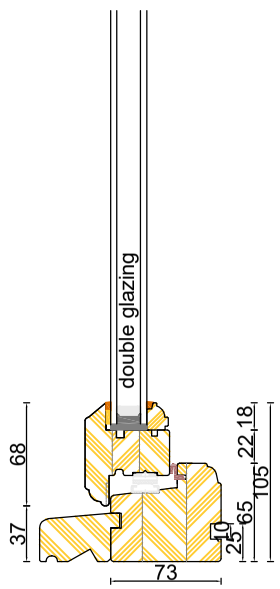


1 Threshold / Transom / Head Detail

1 : 5

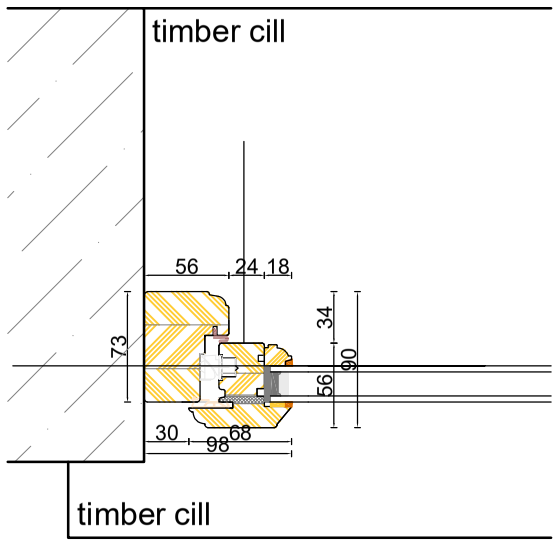


2 Window Plan

1 : 5

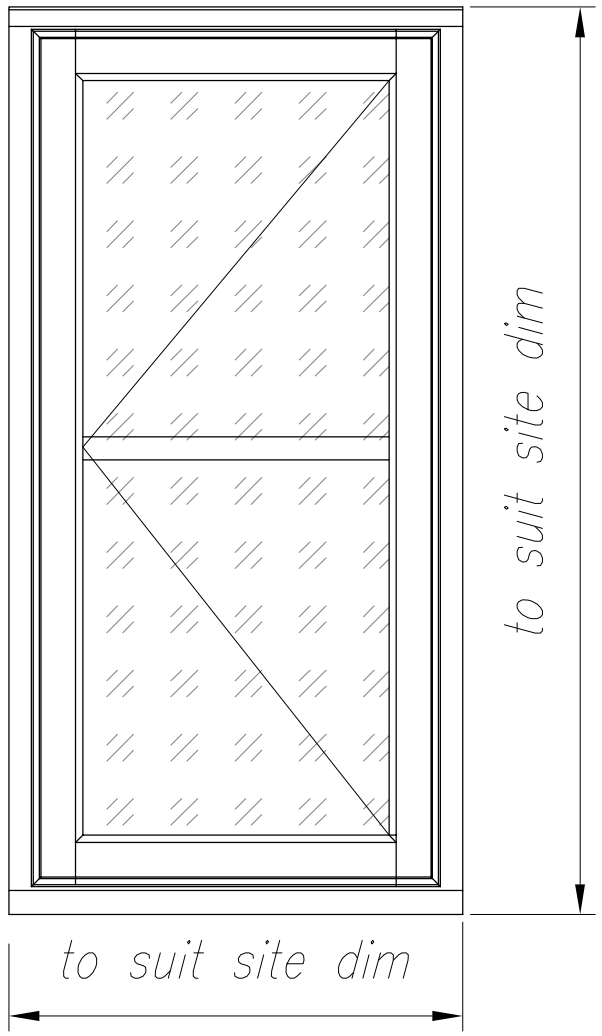


3 Window Elevation

1 : 10

1:5 0 100 200 300 400 500 mm

WORK IN PROGRESS

| Rev: | Date: | Description: | By: | Auth: |
|---|---|---|---|---|


Farrar Bamforth Architecture

A: Bates Mill
Colne Road
Huddersfield
HD1 3AG
T: 01484 424 008
E: design@farrarbamforth.co.uk
W: www.farrarbamforth.co.uk


Client:
MR A. HUSSAIN

Project Name:
CONVERSION OF LISTED BUILDING TO RESIDENTIAL

Project Address:
ACRE HOUSE, ACRE STREET, LINDLEY, HUDDERSFIELD

Reference:

| Project | Originator | Functional | Spatial | Form | Discipline | Number |
|---|---|---|---|---|---|---|
| 25-D01 | FBA | ZZ | XX | DR | A | 3204 |

Title:
TIMBER CASEMENT WINDOW DETAIL - TYPE D

| Status: Code | Description | Revision: Code |
|---|---|---|
| S0 | WORK IN PROGRESS | P01 |

| Created By: | Authorised By: | Date: | Scale at A3: |
|---|---|---|---|
| MC | MW | May 25 | as shown |


This document is © Farrar Bamforth Architecture. Drawing measurements shall not be obtained by scaling. Verify all dimensions prior to construction or product manufacture, if in doubt, contact the document author. Immediately report any discrepencies on this document to Farrar Bamforth Architecture. This document is to be read in conjunction with associated models, specifications and related consultants / supplier documents.