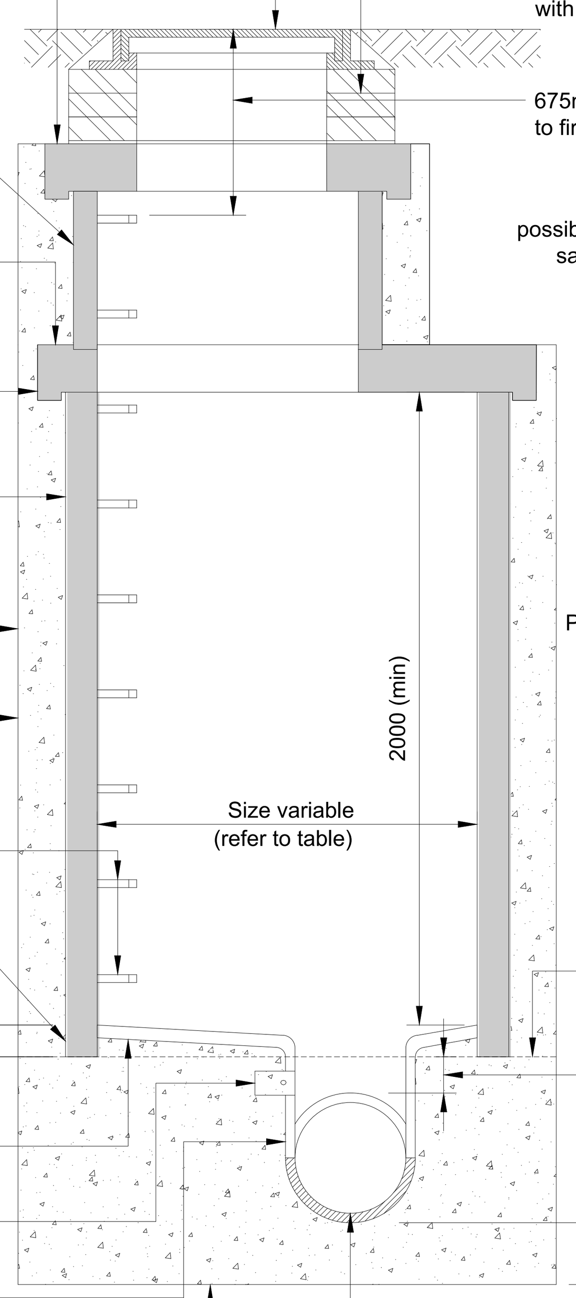

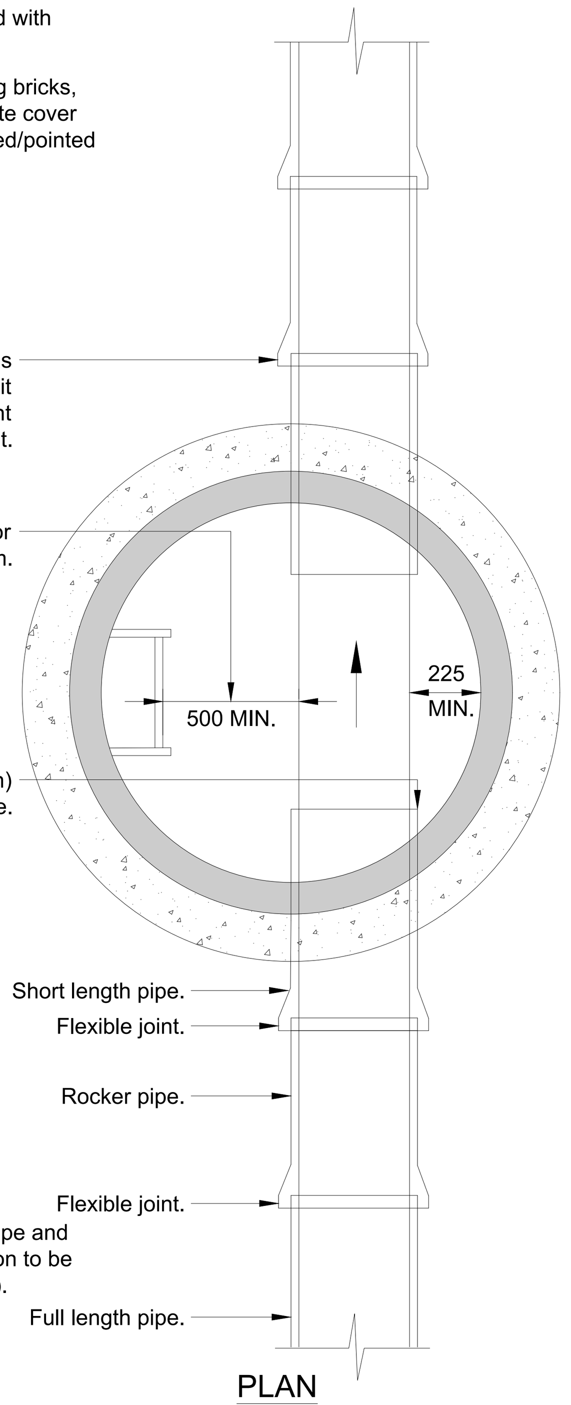

TYPICAL TYPE A P.C.C. MANHOLE DETAIL
DEPTH TO SOFFIT OF PIPE 3000mm TO 6000mm

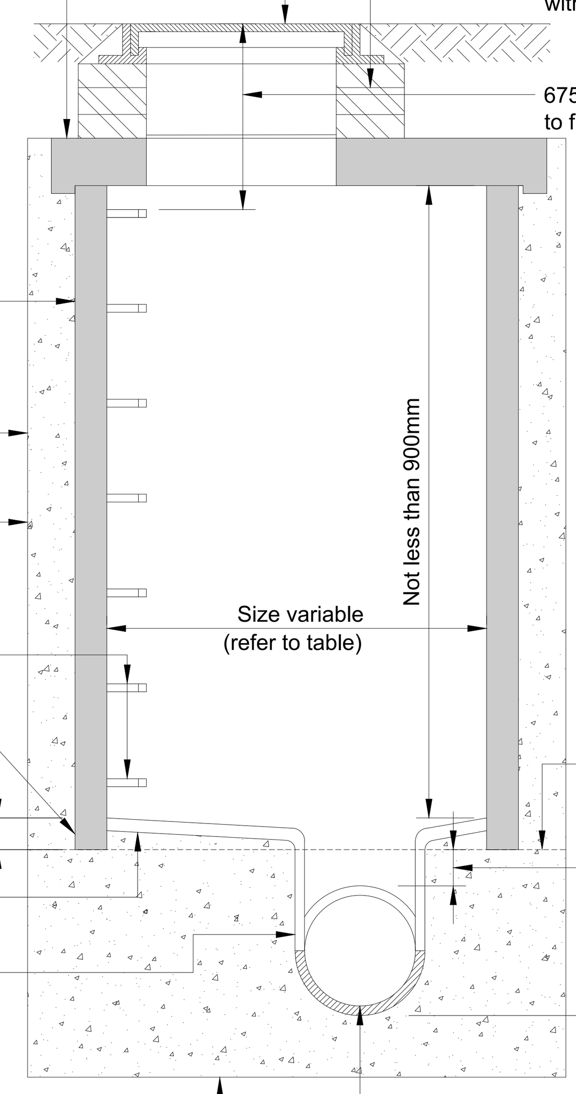

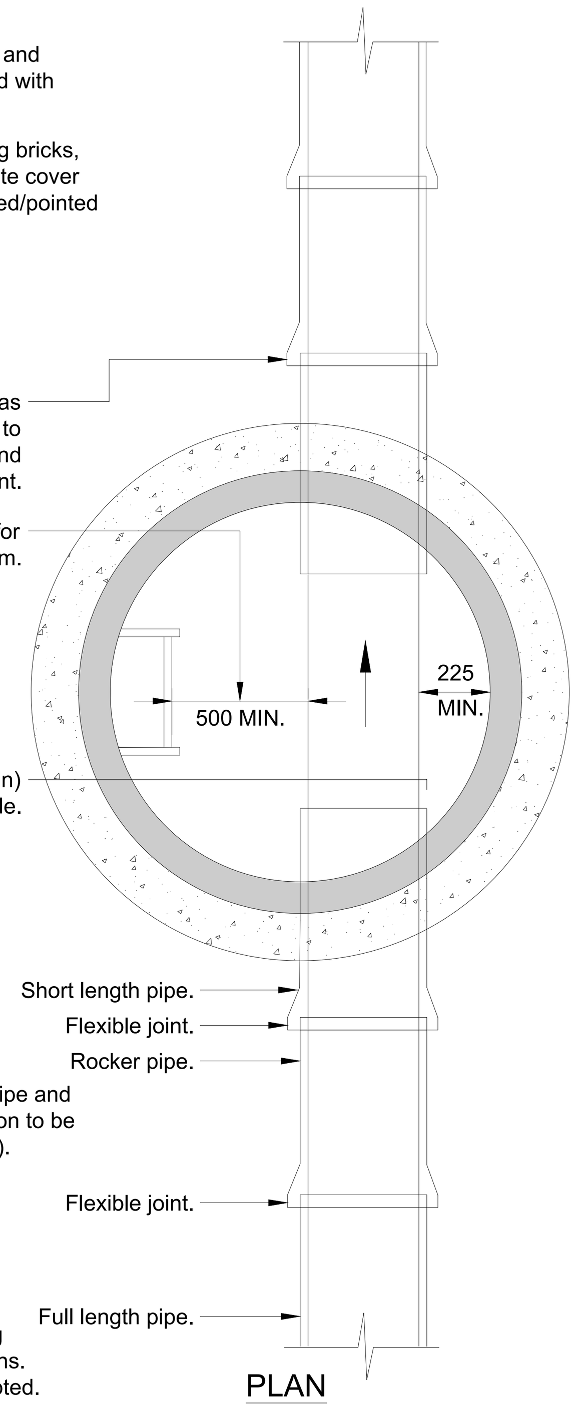

TYPICAL TYPE B P.C.C MANHOLE DETAIL
DEPTH TO SOFFIT OF PIPE 1500mm TO 3000mm

DIA. OF LARGEST PIPE IN M.H.	CHAMBER SECTION INT.DIA. (mm)
LESS THAN 375mm	1200
375 TO 700	1500
750 TO 900	1800
GRATER THAN 900	AS SPECIFIED

TABLE APPLICABLE TO P.C.C. MANHOLE TYPES
(chamber sizes are minimum required)

NOMINAL SIZE	EFFECTIVE LENGTH (mm)
150 TO 600	600
OVER 600 TO 750	1000
OVER 750	1250

SHORT AND ROCKER PIPE LENGTHS TABLE APPLICABLE TO ALL MANHOLE TYPES

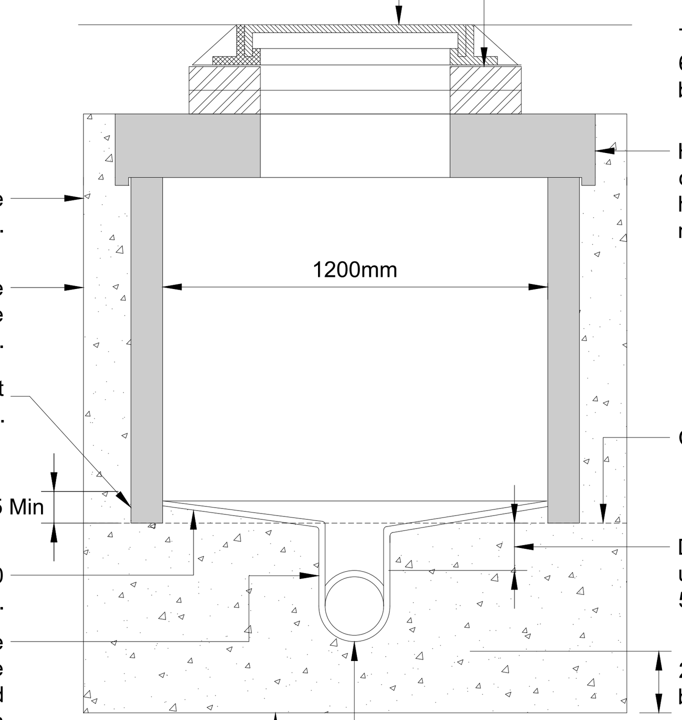

TYPICAL TYPE E P.C.C. MANHOLE DETAIL
DEPTH TO SOFFIT OF PIPE 1m TO 1.5m
Max sewer diameter 375mm
(non-man entry)

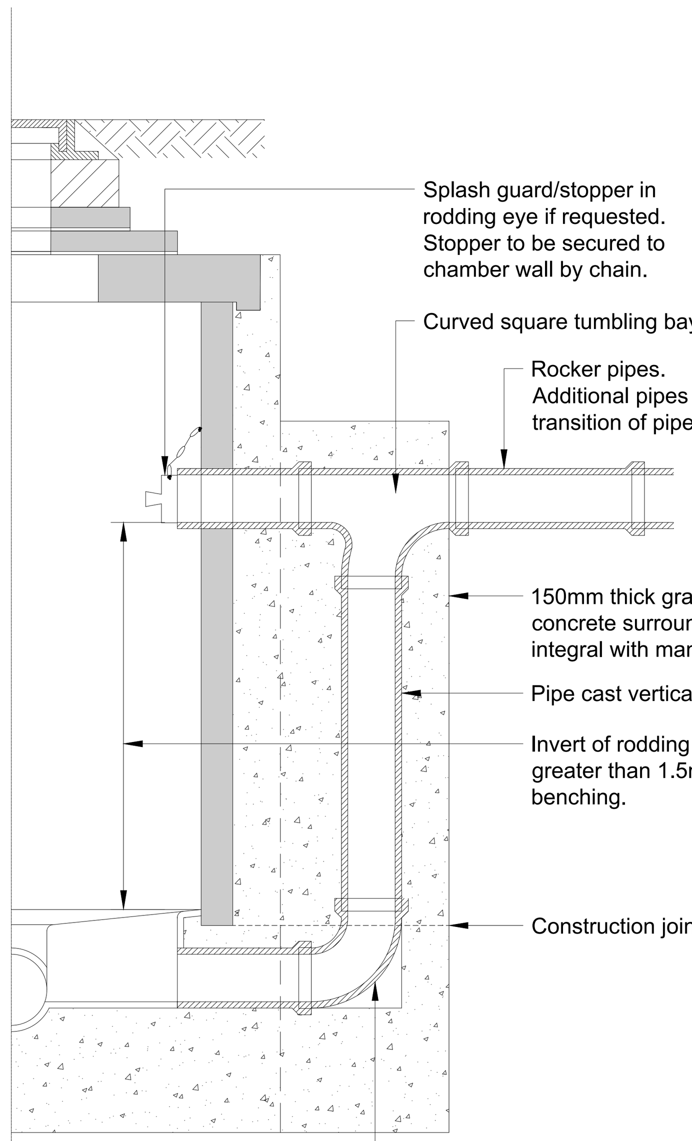

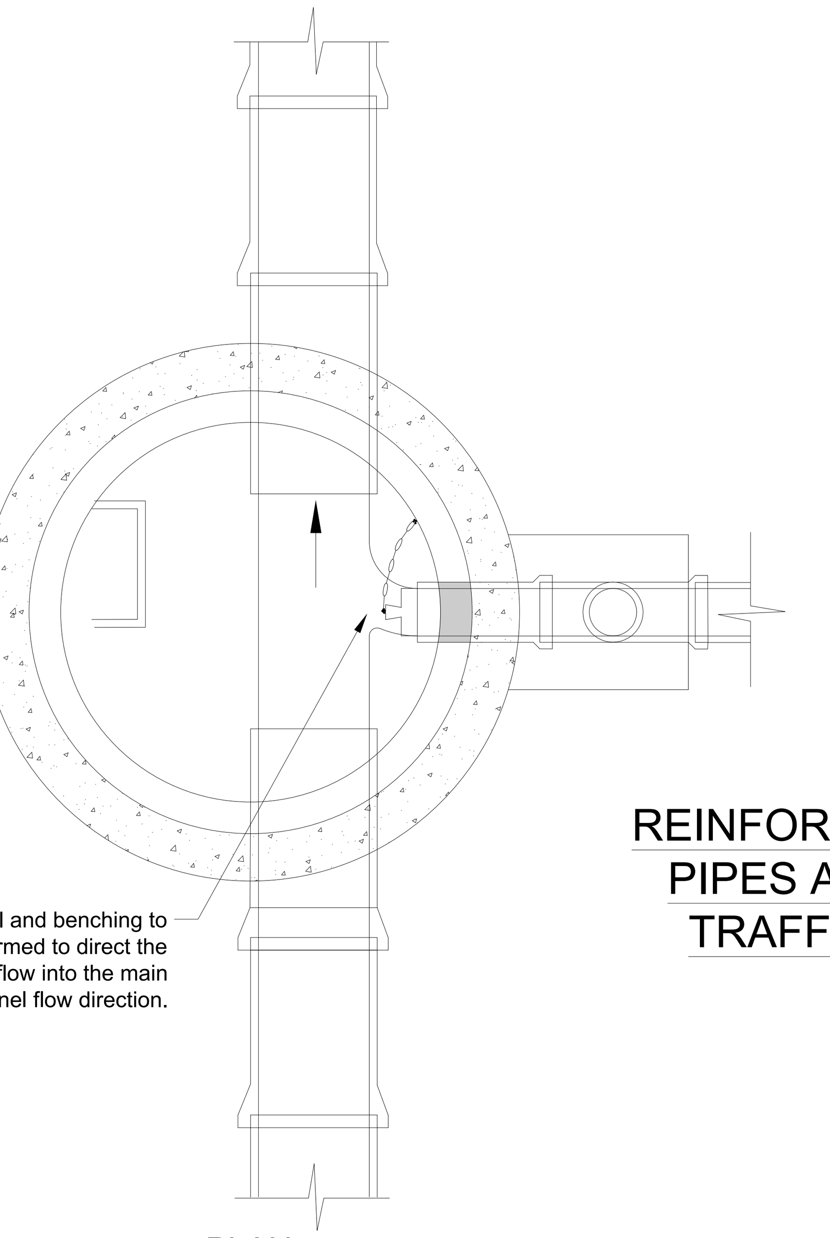

TYPICAL VERTICAL BACKDROP MANHOLE DETAIL
(note: construction details as standard PCC manhole)

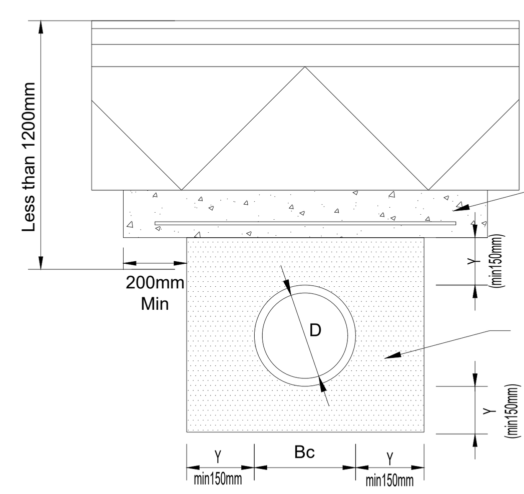

REINFORCED CONCRETE PROTECTION DETAIL FOR PIPES AT DEPTHS OF COVER LESS THAN 1.2m IN TRAFFICKED AREAS AND LESS THEN 900mm IN UNTRAFICKED AREAS

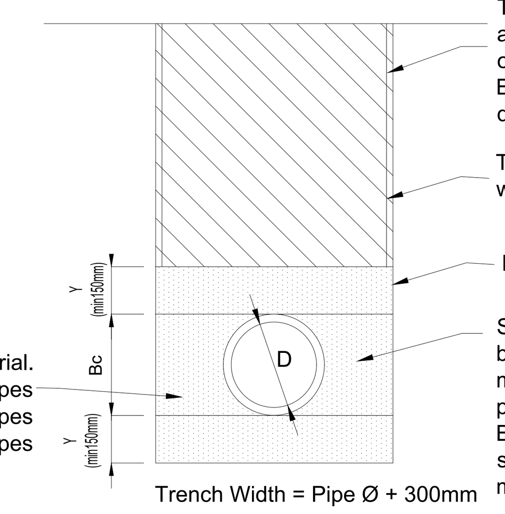

Main back fill material compacted in layers not exceeding 250mm thick. to be type 1 granular material under roads where directed mechanical compaction of main backfill material should not be commenced until there is a total cover depth of 300mm above the crown of the pipe.

Pipe zone material conforming to bedding table

GEN3 grade concrete with compressible fibre as described in table placed at each pipe joint to preserve flexibility

INSTALLATION GUIDE FOR SEWER PIPE TO WIS 4-35-01

Stantec

Stantec UK Limited
2 Esh Plaza, Sir Bobby Robson Way, Great Park, Newcastle upon Tyne
Newcastle upon Tyne
NE13 9BA
Tel. +44 (0)1912 302993
www.stantec.com/uk

Copyright Reserved

The Copyrights to all designs and drawings are the property of Hydrock Consultants Ltd. Reproduction or use for any purpose other than that authorised by Hydrock is forbidden.

The Contractor shall verify and be responsible for all dimensions. DO NOT scale the drawing. Any errors or omissions shall be reported to Hydrock without delay.

Colour Disclaimer

This drawing has been documented in colour. This drawing is required to be printed in colour. Failure to do so may result in loss of information. Black and white printing may be used if specific black and white documents have been obtained from Stantec.

Drainage Notes

1. Refer to Proposed Drainage Layout Drawing "BC0942-STA-XX-XX-DR-C-1000" for Drainage Notes

HEALTH & SAFETY
1. CONTRACTOR SHOULD BE AWARE OF GENERAL CONSTRUCTION RISKS TO PREVENT SLIPS, TRIPS AND FALLS AND TAKE NECESSARY PRECAUTIONS WITHOUT SPECIAL INSTRUCTION.
ROADS & DRAINAGE
2. CONTRACTOR TO PROVIDE TRENCH SUPPORTS AS APPROPRIATE AND ENSURE THAT PLANT REMAINS A SAFE DISTANCE FROM TRENCHES PRIOR TO INSTALLING DRAINAGE
3. THE TIME THAT EXCAVATIONS ARE OPEN ON SITE SHOULD BE KEPT TO A MINIMUM AND ALL TRENCHES SHOULD BE SURROUNDED BY A BARRIER.
4. CONNECTIONS TO EXISTING SEWERS TO BE MADE BY YORKSHIRE WATER APPROVED CONTRACTOR ONLY.
5. CONTRACTOR TO MAKE OPERATIVES AWARE OF ASSOCIATED DANGERS TO HEALTH SUCH AS LEPTOSPIROSIS (WEILS DISEASE) AND RECOMMENDED PRECAUTIONS. ADEQUATE WELFARE FACILITIES AND PROTECTIVE CLOTHING TO BE PROVIDED AS REQUIRED.
6. UNFINISHED MANHOLES MUST BE COVERED WITH LOAD BEARING MATERIALS AND SURROUNDED WITH BARRIER.
PIPES & CABLES
7. SERVICE RECORDS TO BE REFERRED TO PRIOR TO WORK COMMENCING. CONTRACTOR TO PROCEED WITH CAUTION AND SERVICES TO BE LOCATED BY HAND DIG AND PROTECTED ACCORDINGLY.
EXCAVATION/FILL
8. CONTRACTOR TO ENSURE RELEVANT MEASURES ARE TAKEN TO KEEP PLANT AND PEOPLE A SAFE DISTANCE FROM STEEP SLOPES DURING THE WORKS.
9. CONTRACTOR TO ENSURE THAT PROCEDURES ARE IN PLACE TO KEEP PEOPLE A SAFE DISTANCE FROM WORKING PLANT WHERE NECESSARY.
10. CONTRACTOR TO REFER TO GROUND INVESTIGATION REPORT FOR CONTAMINATION TESTS AND TO PROVIDE ADEQUATE WELFARE FACILITIES AND PROTECTIVE CLOTHING AS REQUIRED.

UPVC PIPES TO BE CERTIFIED TO WIS 4-35-01 and BSEN13476

CLAY PIPE STRENGTH REQUIREMENTS
100mm DIA. MINIMUM CRUSHING STRENGTH = 40kN/m
150mm DIA. MINIMUM CRUSHING STRENGTH = 40kN/m
225mm DIA. MINIMUM CRUSHING STRENGTH = 45kN/m
300mm DIA. MINIMUM CRUSHING STRENGTH = 72kN/m

CONCRETE PIPE TO EN 1916/BS5911-1:202
STRENGTH REQUIREMENTS
ALL CONCRETE PIPES SHOULD BE CLASS 120 (TO EN 1916/BS5911-1 2002)

YORKSHIRE WATER REF
X-X-XXX-XXX

P01 INITIAL ISSUE	JF	MP	04.07.2025
Issued/Revision	By	Appd	DD.MM.YYYY

JF	JF	MP	04.07.2025
Dwn.	Dsgn.	Chkd.	DD.MM.YYYY

Issue Status

S2 - FOR INFORMATION

This document is suitable only for the purpose noted above.
Use of this document for any other purpose is not permitted.

Client/Project Logo

thirteen
Managing and building homes

Client/Project
THIRTEEN GROUP

HIGHMOOR LANE, CLECKHEATON

Title
DRAINAGE DETAILS
SHEET 1

Project No. 39134
A1 Scale NTS
Revision **P01**
Drawing No. **BC0942-STA-XX-XX-D-C-1010**

Plotted: 04.07.2025 2025.07.04 2:50:03 PM By: Foster, James
ORIGINAL SHEET - ISOA1 p:\39000-39999\39134 - highmoor lane cleckheaton\01_wip\dr_drawing\c\working drawings\bc0942-sta-xx-xx-d-c-1010 - adoptable drainage details