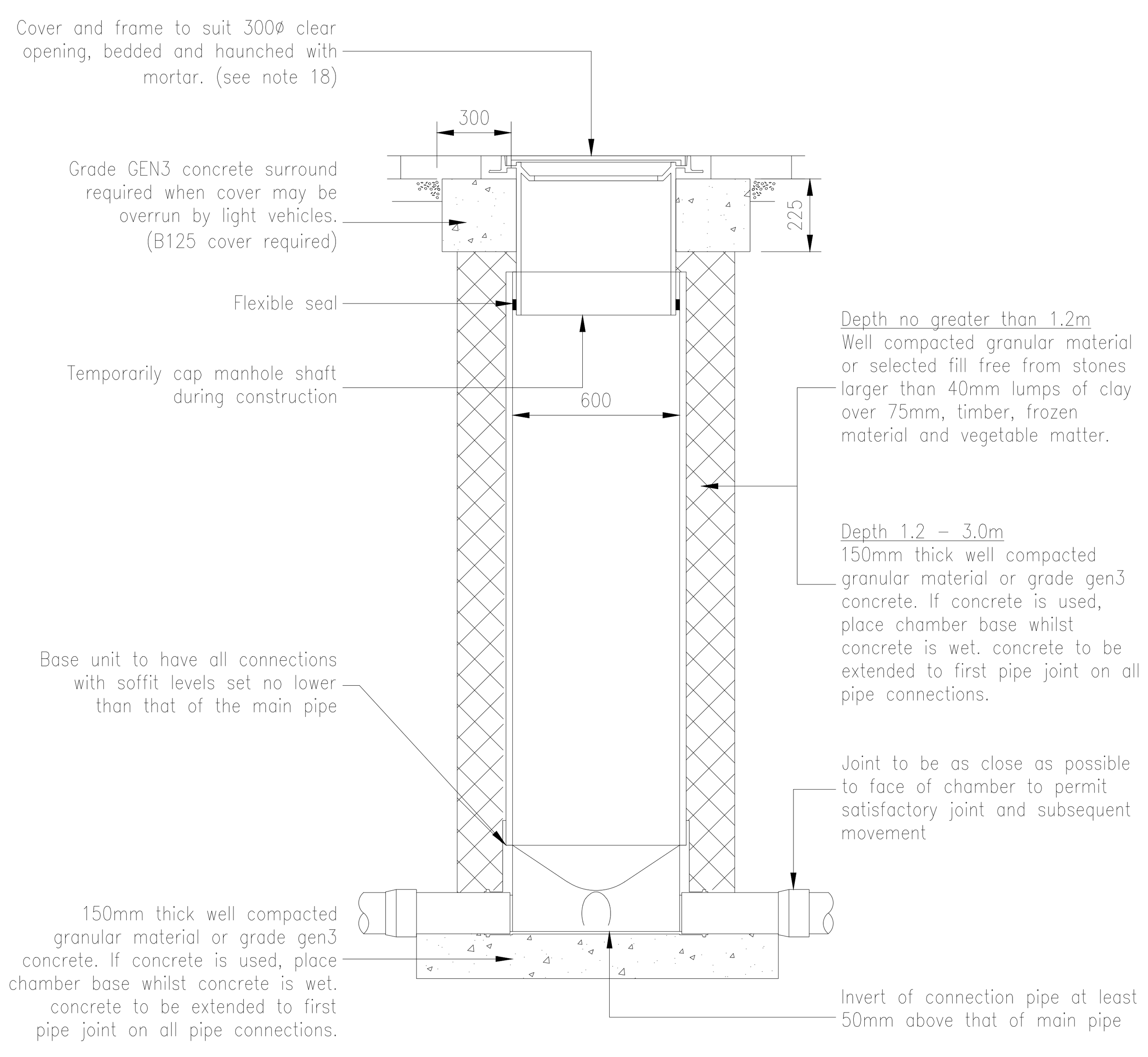

TYPICAL SECTION
(non-man entry)

TYPICAL 600ø POLYPROPYLENE INSPECTION CHAMBER DETAIL
DEPTH NO GREATER THAN 3000mm

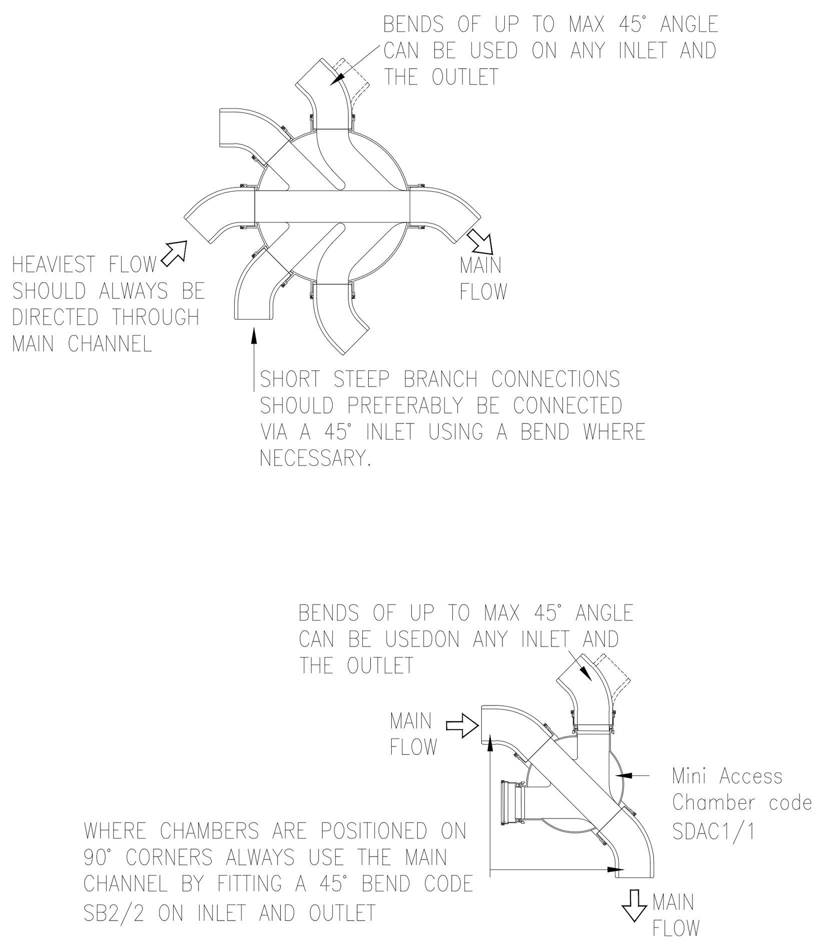

300 DIA POLYPROPYLENE
INSPECTION CHAMBER
(UPTO 0.6 DEEP)

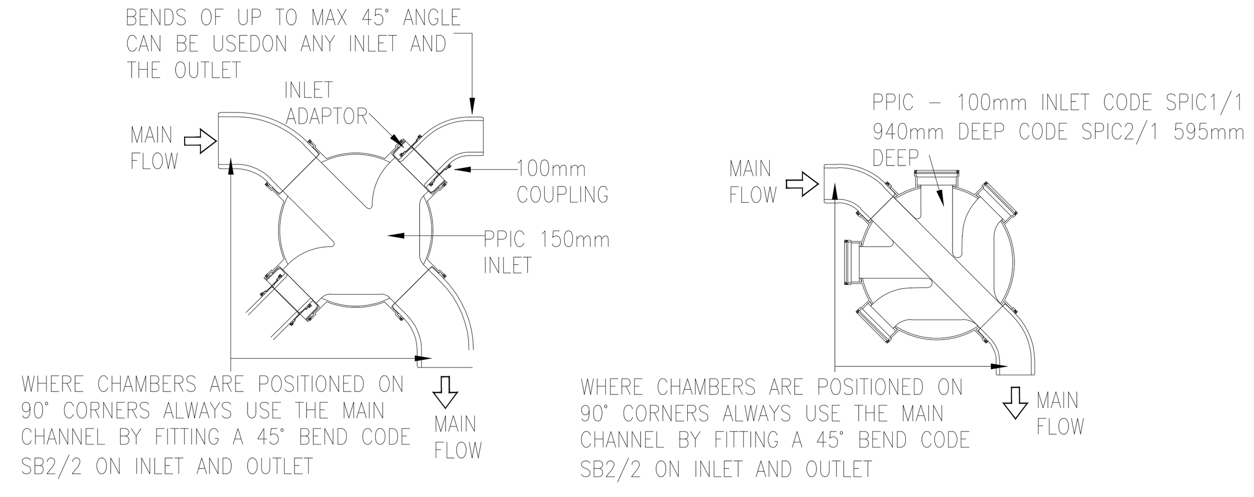

450 DIA POLYPROPYLENE
INSPECTION CHAMBER
(UPTO 1.2M DEEP)

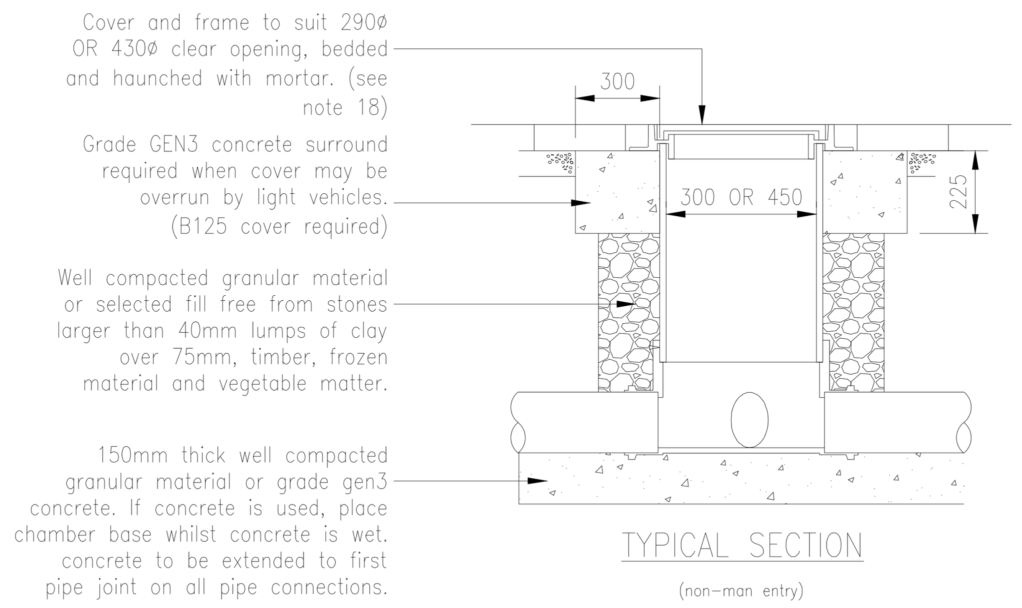

TYPICAL SECTION
(non-man entry)

TYPICAL 300ø/450ø POLYPROPYLENE
INSPECTION CHAMBER DETAIL
DEPTH NO GREATER THAN
600mm/1200mm RESPECTIVELY

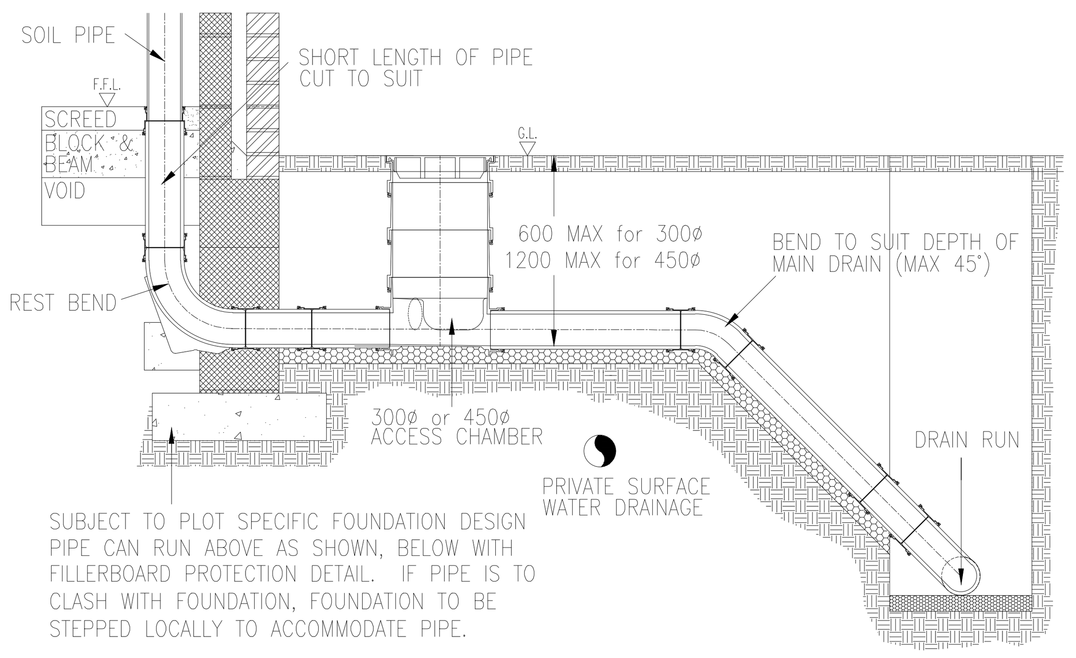

ACCESS CHAMBER CONNECTION TO MAIN DRAIN RUN

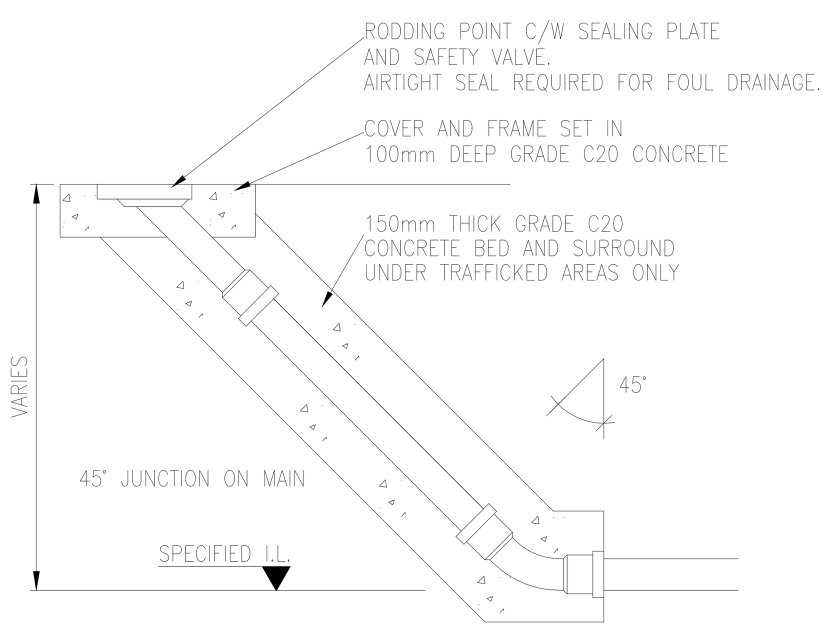

TYPICAL RODDING EYE DETAIL

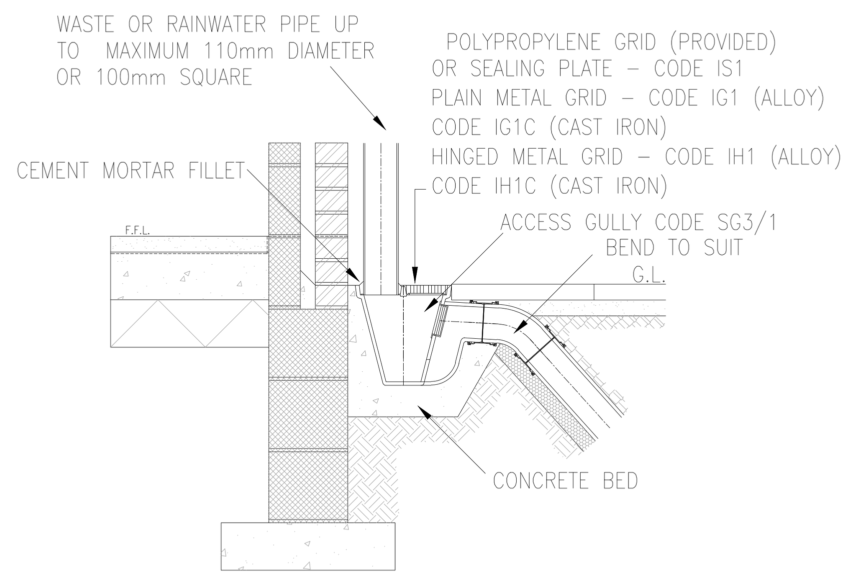

HEPWORTH BACK INLET GULLY DETAIL
(OR EQUAL AND APPROVED)

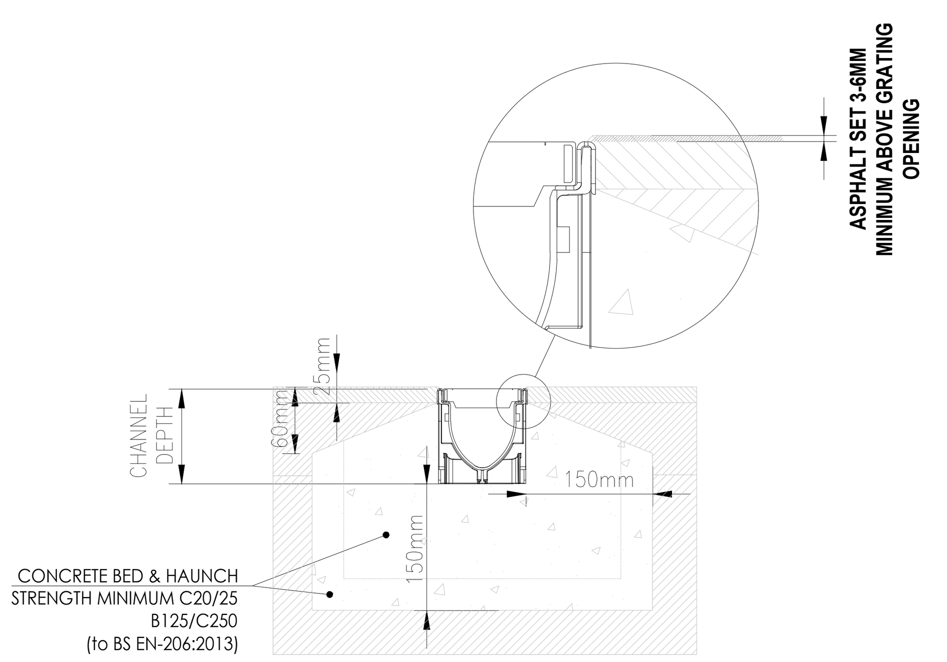

1 : 10 ACO
HexDrain Pro
Asphalt Pavement

ACO HEXDRAIN PRO(C250)
SCALE 1:10

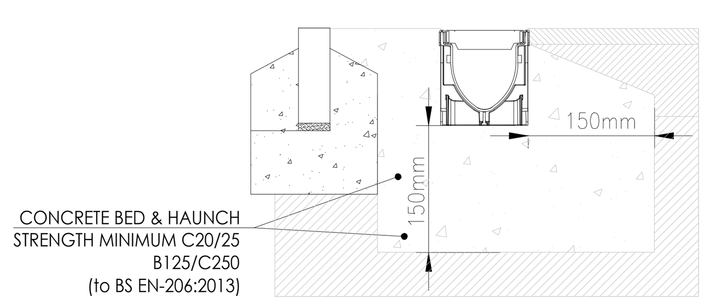

1 : 10 ACO
HexDrain Pro
Asphalt Pavement

ACO HEXDRAIN PRO(C250)
SCALE 1:10

NOTES

1. ALL ADOPTABLE SER WORKS AND MATERIALS TO BE IN ACCORDANCE WITH THE DESIGN AND CONSTRUCTION GUIDELINES FOR FOUL AND SURFACE WATER OFFERED FOR ADOPTION, THE RELEVANT BRITISH/EUROPEAN AND NORTHUMBRIAN WATERS STANDARD/REQUIREMENTS..
2. CONTRACTOR TO ESTABLISH POSITION SIZE AND DEPTH OF ALL EXISTING SEWERS AND SERVICES PRIOR TO COMMENCEMENT ON SITE.
3. THE CONTRACTOR SHALL ALLOW FOR THE PROTECTION, TEMPORARY AND PERMANENT SUPPORT, AND TEMPORARY AND PERMANENT DIVERSION WORKS, AS NECESSARY TO ALL EXISTING SERVICES.
4. THE CONTRACTOR SHALL ALLOW FOR ALL TRAFFIC MANAGEMENT IN CONNECTION WITH ROAD AND SEWER WORKS.
5. THE CONTRACTOR SHALL ALLOW FOR KEEPING SEWER TRENCHES AND EXCAVATIONS AS DRY AS PRACTICABLE BY PUMPING FROM TEMPORARY SUMPS AND DE WATERING AS APPROPRIATE. THE POINT AND METHOD OF DISCHARGE TO BE AGREED WITH THE DRAINAGE AUTHORITY.
6. PIPES UP TO AND INCLUDING 300mmØ TO BE TWIN WALLED PLASTIC PIPES. PIPES 375mmØ AND GREATER TO BE CONCRETE CLASS H.
7. THE ADOPTABLE SEWERS SHOULD BE A MINIMUM OF 1m AND MANHOLES 0.5m FROM KERBS FACES AND SERVICE MARGINS.
8. SEWERS MUST HAVE 5 METERS CLEARANCE FROM TREES AND HEDGES
9. ALL PIPE WORK TO BE 100mm DIAMETER UNLESS NOTED OTHERWISE.
10. COVER SLABS MUST CARRY THE BSI KITE MARK OR WILL BE REJECTED BY DRAINAGE INSPECTOR. WHERE THE CLEAR OPENING OF THE KITE MARKED PRODUCT IS DIFFERENT TO THAT OF THE COVER AND FRAME A LOAD BEARING SLAB SHOULD BE FITTED ABOVE THE COVER SLAB TO BRING THE SIZE DOWN TO 675mmx675mm FOR THE NORTHUMBRIAN WATER SPECIFIED COVER SIZE. PLEAS REFER TO CONCRETE PIPE SYSTEMS ASSOCIATIONS TECHNICAL BULLETIN ISSUED AUTUMN 2004 FOR KITE MARKED COVER SLAB OPENING SIZES.
11. SULPHATE RESISTING CEMENT (C20-DC2) AND PRECAST CONCRETE PRODUCTS MUST BE USED OR A LABORATORY REPORT PROVIDED PROVING THAT SUCH PRECAUTIONS ARE NOT NECESSARY..
12. GULLY GRATES AND FRAMES SHALL COMPLY WITH THE RELEVANT PROVISIONS OF BS EN124 AND BE OF A NON-ROCKING DESIGN WITH CAPTIVE HINGE ACCESS AND BE KITE MARKED. LOAD CLASS D400 FOR ROADS REGULARLY CARRYING FAST MOVING HEAVY VEHICLES. CLASS C250 TO BE USED IN LESSER TRAFFICKED AREAS eg. ESTATE ROADS, CUL-DE-SACS, RESIDENTIAL CAR PARKING AREAS ETC.
13. SEWERS TO BE LAID IN CLASS 'S' BEDDING (150MM GRANULAR BED AND SURROUND WHERE DEPTH OF COVER TO TOP OF THE SEWER IS LESS THA1.2m IN HIGHWAYS AND VERGES 9OR LESS THAN 0.9M IN NONE VEHICULAR ACCESS AREAS) THEN A CONCRETE SLAB SHALL BE PROVIDED ABOVE THE GRANULAR BED AND SURROUND
14. BACKFILLING AND REINSTATEMENT TO TRENCHES IN PUBLIC HIGHWAYS SHALL BE TYPE 1 GRANULAR MATERIAL IN ACCORDANCE WITH THE REQUIREMENTS AND SPECIFICATIONS OF THE ADOPTING AUTHORITY, OR, IN THE ABSENCE OF SUCH, IN ACCORDANCE WITH THE REQUIREMENTS OF "THE STREET WORKS REGULATIONS 1992" AND RELEVANT PROVISIONS OF H.A.U.C. "SPECIFICATION FOR THE REINSTATEMENT OF OPENINGS IN HIGHWAYS" JUNE 1992, BOTH UNDER SECTION 71 OF THE NEW ROADS AND STREET WORKS ACT 1991.
15. BEDDING AND BACKFILL MATERIAL TO CONFORM TO THE REQUIREMENTS OF WATER INDUSTRY SPECIFICATION 4-08-02(TABLE A2)
16. ALL ROAD GULLIES ARE TO BE TRAPPED GULLIES. ALL GULLY LEADS TO BE 150mm DIAMETER.
17. ALL REDUNDANT EXISTING DRAINAGE TO BE GRUBBED UP OR GROUTED, ANY EXISTING LIVE DRAINAGE SHOULD BE REPORTED TO THE ENGINEER AND RECONNECTED.
18. ALL ROAD GULLIES & LEADS TO BE CLEARED OF DEBRIS UPON COMPLETION OF WORKS.
19. THE CONTRACTOR MUST ENSURE THAT ANY OF THE EXISTING DRAINAGE WHICH IS LIVE IS KEPT CLEAR OF DEBRIS AND SHOULD ALLOW FOR JETTING THROUGH THE NEW & EXISTING DRAINAGE UPON COMPLETION.
20. CONTRACTOR TO TAKE MEASURES TO PROTECT HIS OPERATIVES WITH RESPECT TO THE PRESENCE OF GAS IN SEWER TRENCHES AND MANHOLES THROUGH THE USE OF GAS MONITORING EQUIPMENT AND BREATHING APPARATUS AS REQUIRED.
21. CONTRACTOR TO APPLY FOR SEWER PERMITS AND ROAD OPENING PERMITS AS NECESSARY FROM THE APPROPRIATE AUTHORITIES, PRIOR TO COMMENCING WORKS.
22. FILLED GROUND MUST BE FILLED AND CONSOLIDATED UNDER THE SUPERVISION AND TO THE SATISFACTION OF YORKSHIRE WATER BEFORE ANY SEWER WORKS ARE CARRIED OUT.

Stantec UK Limited
2 Esh Plaza, Sir Bobby Robson Way, Great Park, Newcastle upon Tyne
Newcastle upon Tyne
NE13 9BA
Tel. +44 (0)1912 302993
www.stantec.com/uk

Copyright Reserved

The Copyrights to all designs and drawings are the property of Hydrock Consultants Ltd. Reproduction or use for any purpose other than that authorised by Hydrock is forbidden.

The Contractor shall verify and be responsible for all dimensions. DO NOT scale the drawing. Any errors or omissions shall be reported to Hydrock without delay.

Colour Disclaimer

This drawing has been documented in colour. This drawing is required to be printed in colour. Failure to do so may result in loss of information. Black and white printing may be used if specific black and white documents have been obtained from Stantec.

Issued/Revision	By	Appd	DD.MM.YYYY
P01 PRELIMINARY ISSUE	JF	MP	29.08.2025

Dwn.	Dsgn.	Chkd.	DD.MM.YYYY
JF	JF	MP	29.08.2025

Issue Status

S2 - FOR INFORMATION

This document is suitable only for the purpose noted above.
Use of this document for any other purpose is not permitted.

Client/Project Logo

thirteen
Managing and building homes

Client/Project
THIRTEEN GROUP

HIGHMOOR LANE, CLECKHEATON

Title
PRIVATE DRAINAGE DETAILS
SHEET 1

Project No.	A1 Scale
39134	NTS

Revision	Drawing No.
P01	BC0942-STA-XX-XX-D-C-1015