Arboricultural Impact Assessment BS5837:2012

AllArboriculture
23 Southernhay Avenue, Bristol, BS8 4TJ
07375110399
e – info@allarboriculture.co.uk

Prepared By: Kristian Chesterman - Principal Consultant

Date: 15th May 2020

Site: 287 Oxford Road, Gomersal, BD19 4JR

Ref: 287 Oxford Road (AIA)

Kristian Chesterman

All Arboriculture

AllArboriculture
23 Southernhay Avenue, Bristol,
BS8 4TJ
07375110399
e – info@allarboriculture.co.uk

CONTACTS

Client Details		
Omar Aftab	**Address:**	**287 Oxford Road, Gomersal,** **BD19 4JR**
	Contact Numbers:	
	E-mail:	

Consultant Details		
Kristian Chesterman **All Arboriculture**	**Address:**	**28 Southernhay Avenue** **Bristol** **BS8 4TJ**
	Contact Numbers:	**07375110399**
	E-mail:	**info@allarboriculture.co.uk**

CONTENTS OF REPORT

1 Introduction 3
2 Site Description 6
3 Vegetation Description 7
4 Arboricultural Impact Assessment 8

Appendices

1 Terms and Definitions 13
2 Authors Qualifications and Experience 15
3 Tree Survey 16
4 Tree Categorisation Table (BS5837:2012) 18
5 Specification for Tree Protection Barriers 19
6 References 20

1 INTRODUCTION

1.1 Instruction

1.1.1 The report is produced at the instruction of Omar Aftab. The instruction was received on the 11th May 2020.

1.1.2 The instruction is to produce a tree survey and arboricultural impact assessment as a formal report in accordance with BS5837:2012 to be submitted as part of an application for full planning consent.

1.2 Tree Survey

1.2.1 The tree survey is undertaken by a suitable qualified Arboriculturist (see appendix 2) and was produced independent of any proposed layout. The completed survey will be used to identify trees on the site and categorise those which are most suitable for retention in order to enhance the development. Detail on tree categorisation can be viewed in appendix 4.

1.2.2 The tree survey was carried out on the 12th May 2020.

1.2.3 The tree survey collected relevant information in accordance with BS5837:2012 which are as follows:

a) Tree identification number (which is linked to the plan)

b) Species using common names. Scientific names will be identified in appendix 3

c) Height (Metres) measured with a laser distometer

d) Stem diameter (mm) at 1.5M above ground measured with a girthing tape.

e) Branch spread to the four cardinal points (Metres) measured with a laser distometer

f) Existing height above ground of first branch and direction. (Metres)

g) Existing height above ground of canopy. (Metres)

h) Life Stage. Young, Early Mature, Mature, Over Mature. See appendix 3 for definitions.

i) General observations

j) Estimated remaining contribution in years. <10, 10+, 20+, 40+

k) Grading category as per appendix 4.

l) RPA (expressed as a radius)

m) RPA (expressed in square metres)

1.2.4 Full detail of the tree survey which informs the quality and value of the trees can be found within appendix 3.

1.3 Scope of the Report

1.3.1 The aim of the report is to give guidance and recommendations on the relationship between trees, design, demolition and construction activities with the purpose of creating a harmonious and sustainable situation in which trees and built structures can co-exist.

1.3.2 The report will aim to identify the value and quality of woody vegetation on and around the site. The data gathered during the survey will be used to identify the impact that the vegetation will have on the proposed development and vice versa.

1.3.3 As a result, the information gained will be used to make recommendations to ensure the protection of all existing vegetation which is to be retained.

1.3.4 It will also give an indication of which trees are to be removed and provide a suitable justification and make recommendations for mitigation planting where appropriate.

1.3.5 Subsequent to, and depending on the results of the report, there may be a requirement to produce an Arboricultural Method Statement in order to secure the protection of the trees through the construction phase and into the future.

1.4 Limitations and Copyright

1.4.1 The content of the tree survey is intended to inform the most appropriate way forward in terms of development. It is not intended to be used as a detailed tree risk management survey. All observations were made from ground level only and are visual in nature. Should trees with significant defects which present an imminent danger be identified during the survey, this will be brought to the attention of the client immediately and as a separate matter. Should trees require a more detailed inspection (e.g. aerial inspection or decay detection) but the condition is not considered to be imminently dangerous, then this will be identified within the survey and addressed through preliminary management recommendations.

1.4.2 The report does not make reference to protected species (e.g. Bats) and the investigation of the presence of such species remains the responsibility of the client. The disturbance of such species may carry heavy penalties and the client is advised to seek professional advice before implementing any of the recommendations contained within the report (or Arboricultural Method Statement) if their presence is suspected.

1.4.3 No samples were taken from site for lab analysis or for any other purpose.

1.4.4 Copyright – all rights to the report are reserved by the author. No parts of the report are to be sold, lent or hired to any third party not directly involved with the site or the planning application without the written consent of the author.

1.4.5 Comments made in relation to tree health are reflective of their physical condition at the time of the survey. Changes in condition may occur due to external influences (e.g. construction

activities, pathogens, climatic events, etc.) and the author cannot take responsibility for changes in condition once the site visit has been completed.

1.4.6 The report is valid for a period of 1 year.

1.4.7 I have not checked with the local planning authority for the existence of any TPO's or the presence of a designated conservation area. Written consent may therefore be required from the LPA before implementing any of the works contained within the report, if either of these planning restrictions are in place. This remains the responsibility of the client.

1.4.8 Disclaimer. Should any part of the report is altered or tampered with in any way, then this will invalidate the entire document.

1.5 Documents Provided

1.5.1 I was provided with the following documents by the client via e-mail:

- Proposed site plan.

2 SITE DESCRIPTION

2.1 The site is located in the urban area of Gomersal.

2.2 The site is currently land.

2.3 I have not been provided with any information on soil type or modified plasticity index at this time.

2.4 The proposal is to erect a detached .

3 VEGETATION DESCRIPTION

3.1 T1 - T5 form a linear group of very low quality self-set trees all of which have poor form and as such have been downgraded from category B to category C.

4 ARBORICULTURAL IMPACT ASSESSMENT

4.1 The Impact of the Development on the Trees

4.1.1 Foundations

The installation of foundations will require the removal of T1 - T5 which are low quality self-set trees which have been designated as category C.

4.1.2 Drives, parking areas and pathways

No new access arrangements are being planned for this proposal. The existing drive and access will serve the property.

4.1.3 Services

I have not been provided with any information on the installation of services for the buildings at this time but there is more than sufficient space to install service trenches around the site without impacting on any of the retained trees. To be clear, under no circumstances should service trenches, soak-aways or other drainage features be position within the RPA's of any of the retained trees.

4.1.4 Tree removals

As already stated trees T1 - T5 which require felling for the development. All trees are low quality, have poor form and with little visibility and their removal will not have a negative impact.

4.1.5 Tree pruning

No pruning works are required to implement the development.

4.1.6 Damage to root systems

The existing boundary fence will act as a tree protection barrier as shown on draft Tree Protection Plan (TPP). Tree protection barriers as detailed with appendix 5 will not be necessary.

4.1.7 Damage to above ground parts of the tree

The existing boundary fence will act as a tree protection barrier as shown on draft Tree Protection Plan (TPP). Tree protection barriers as detailed with appendix 5 will not be necessary.

4.1.8 Pressure for future tree removal

Replacement trees will be planted in suitable locations to ensure there is no pressure to remove them in the future.

4.1.9 Storage and mixing of heavy and toxic materials

There is sufficient space for the storage and mixing of materials as identified on the draft TPP.

4.1.10 Demolition

No demolition works are required.

4.2 The Impact of the Trees on the Development

4.2.1 Potential for direct damage

All buildings will be sufficiently distant from retained trees to make direct damage extremely unlikely as long as they are engineered appropriately. Hard surfaces which run through the RPA's of retained trees will need to be suitably engineered to reduce the risk of damage.
Any new tree planting will need to be positioned so as to avoid direct damage to any of the new structures.

4.2.2 Potential for indirect damage

I have not been provided with any detail on soil type or modified plasticity index.

4.2.3 Shading

The issue of shading is insignificant.

4.2.4 Seasonal nuisance

Seasonal nuisance will not increase from that which is currently experienced.

4.2.5 Privacy and screening

T1 - T5 will be replaced with better specimens in suitable locations. It is respectfully suggested that if additional tree planting is required then this should be secured through an appropriately worded planning condition.

4.3 Issues to be addressed by the Arboricultural Method Statement

4.3.1 It may be possible to secure tree protection through conditioning the draft TPP but if additional information is required in the form of an Arboricultural Method Statement then it is respectfully suggested that this should be secured through an appropriately worded planning condition. The following issues shall be addressed:

i. Site construction access
ii. Contractor's car parking.
iii. Phasing of on-site operations.
iv. Welfare facilities (requirement and siting)
v. Storage and mixing areas.
vi. Tree Protection (barriers)
vii. Tree Protection Plan (final version – if amendment is required)
viii. The installation of specialist no dig paths and drives (if required).
ix. Removal of materials, facilities, and protective measures for the final phase
x. Post construction tree works and landscaping.
xi. Monitoring

Appendices

1 TERMS AND DEFINITIONS

Access facilitation pruning

A one-off tree pruning operation, the nature and effects of which are without significant adverse impact on the tree(s) physiology or amenity value, which is directly necessary to provide access for operations on site.

Arboricultural Method Statement

A methodology for the implementation of any aspect of development that is in the RPA, or has the potential to result in loss or damage to a tree to be retained.

Arboriculturist

A person who has through relevant education, training and experience, gained expertise in the field of trees in relation to construction.

Competent Person

A person who has had training and experience relevant to the matter being addressed and an understanding of the requirements of the particular task being approached.

Construction

A site-based operation with the potential to affect existing trees.

Construction Exclusion Zone

An area based on the RPA from which access is prohibited for the duration of the project.

Root Protection Area (RPA)

A layout design tool indicating the minimum area around a tree deemed to contain sufficient roots and rooting volume to maintain the tree's viability, and where the protection of the roots and soil structure is treated as a priority.

Service

Any above- or below- ground structure or apparatus required for utility provision.

Stem

The principal above-ground structural component(s) of a tree that supports its branches.

Structure

Manufactured objects, such as a building, carriageway, path, wall, service run and built or excavated earthworks.

Tree Protection Plan

A scale drawing, informed by descriptive text where necessary, based upon the finalised proposals, showing trees for retention and illustrating the tree and landscape protection measures.

2 AUTHORS QUALIFICATIONS AND EXPERIENCE

Qualifications:

Level 6 BSC(Hons) in Arboriculture	2013
Technicians Certificate in Arboriculture (Merit)	2012
Arboricultural Consultant. (AllArboriculture)	2015 – present
Arborist and Owner(Chesterman Tree Care)	2006 – 2014

3 TREE SURVEY

Key to scientific names:

Common Names	***Scientific Names***
Ash	*Fraxinus excelsior*
Holly	*Ilex aquifolium*

Key to Life Stage description:

Young	Newly planted
Semi Mature	Large nursery stock which can be newly planted or still in the stages of establishment
Early Mature	Tree in the first third of its life cycle, growing quickly
Mature	Tree in the second third of its life cycle, maintaining its ultimate size with minimal annual growth
Over Mature	Tree in the final third of its life cycle, starting to show signs of decline

Tree No.	Species (Common Name)	Height (m)	Stem Dia. @ 1.5m (mm)	Branch Spread (m) N-E-S-W				Height of First Branch (m) and Direction	Canopy Height (m)	Life Stage. Y, SM, EM, M, OM	General Observations. Condition and Management Recommendations	Estimated remaining Contribution (Yrs) <10, 10+, 20+, 40+	Retention Category	RPA - radius (m)	RPA (m2)
T1	Ash	14	480	2	3	3	3	n/a	2	EM	No significant defects, low quality. Ivy clad.	20+	C1	8.0	201.1
T2	Holly	8	290	2	2	2	2	n/a	2	EM	No significant defects. Ivy clad. Low quality.	20+	B1	6.4	128.7
T3	Ash	12	270	4	1	0	1	n/a	2	EM	Lean to the North, ivy clad. Low quality.	20+	C1	4.8	72.4
T4	Ash	12	320	3	3	3	3	n/a	2	EM	No significant defects, low quality.	20+	C1	5.1	81.7
H5	Ash	10	290	3	3	3	3	n/a	2	EM	No significant defects, low quality	20+	C1	2.0	12.6

4 TREE CATEGORISATION TABLE (BS5837:2012)

Table 1 **Cascade chart for tree quality assessment**

Category and definition	Criteria (including subcategories where appropriate)			Identification on plan
Trees unsuitable for retention (see Note)				
Category U Those in such a condition that they cannot realistically be retained as living trees in the context of the current land use for longer than 10 years	• Trees that have a serious, irremediable, structural defect, such that their early loss is expected due to collapse, including those that will become unviable after removal of other category U trees (e.g. where, for whatever reason, the loss of companion shelter cannot be mitigated by pruning) • Trees that are dead or are showing signs of significant, immediate, and irreversible overall decline • Trees infected with pathogens of significance to the health and/or safety of other trees nearby, or very low quality trees suppressing adjacent trees of better quality *NOTE Category U trees can have existing or potential conservation value which it might be desirable to preserve; see 4.5.7.*			See Table 2
	1 Mainly arboricultural qualities	**2 Mainly landscape qualities**	**3 Mainly cultural values, including conservation**	
Trees to be considered for retention				
Category A **Trees of high quality** with an estimated remaining life expectancy of at least 40 years	Trees that are particularly good examples of their species, especially if rare or unusual; or those that are essential components of groups or formal or semi-formal arboricultural features (e.g. the dominant and/or principal trees within an avenue)	Trees, groups or woodlands of particular visual importance as arboricultural and/or landscape features	Trees, groups or woodlands of significant conservation, historical, commemorative or other value (e.g. veteran trees or wood-pasture)	See Table 2
Category B **Trees of moderate quality** with an estimated remaining life expectancy of at least 20 years	Trees that might be included in category A, but are downgraded because of impaired condition (e.g. presence of significant though remediable defects, including unsympathetic past management and storm damage), such that they are unlikely to be suitable for retention for beyond 40 years; or trees lacking the special quality necessary to merit the category A designation	Trees present in numbers, usually growing as groups or woodlands, such that they attract a higher collective rating than they might as individuals; or trees occurring as collectives but situated so as to make little visual contribution to the wider locality	Trees with material conservation or other cultural value	See Table 2
Category C **Trees of low quality** with an estimated remaining life expectancy of at least 10 years, or young trees with a stem diameter below 150 mm	Unremarkable trees of very limited merit or such impaired condition that they do not qualify in higher categories	Trees present in groups or woodlands, but without this conferring on them significantly greater collective landscape value; and/or trees offering low or only temporary/transient landscape benefits	Trees with no material conservation or other cultural value	See Table 2

5 SPECIFICATION FOR TREE PROTECTION BARRIERS

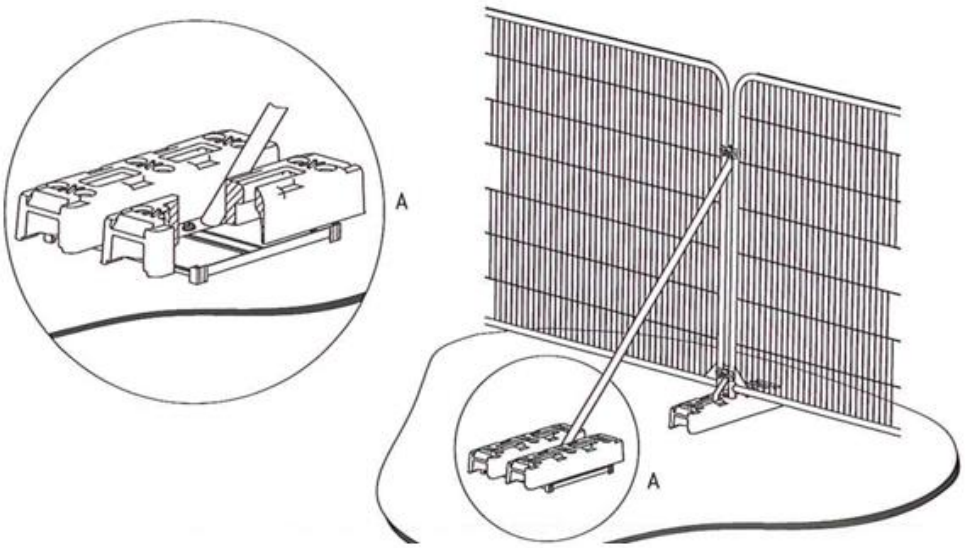

Specification:

1. Two metre tall weld mesh panels secured on rubber or concrete feet.
2. Panels joined together using and minimum of two anti-tamper couplers secured in a way that they can only be removed from the inside.
3. Distance between the couplers should be at least 1m and uniform throughout fence.
4. Panels to be supported on the inside by stabiliser struts.

6 REFERENCES

1. Anon. **(2012)** *BS5837:2012. Trees in relation to design, demolition, and construction – recommendations*. British Standard Institute. London, UK.