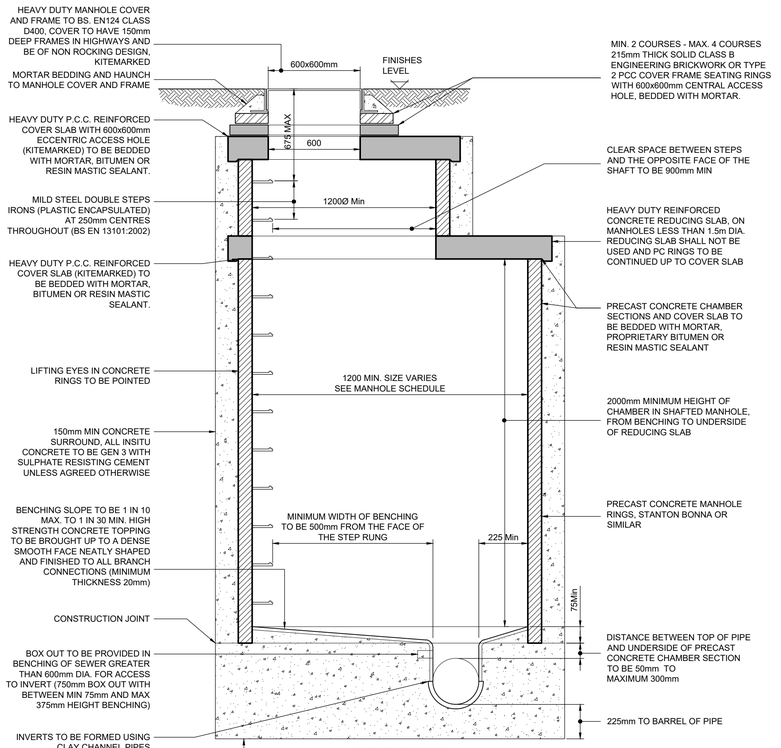

SECTION
MANHOLE TYPE A
FOR USE WHERE DEPTH FROM COVER TO SOFFIT IS BETWEEN 3.0m & 6.0m

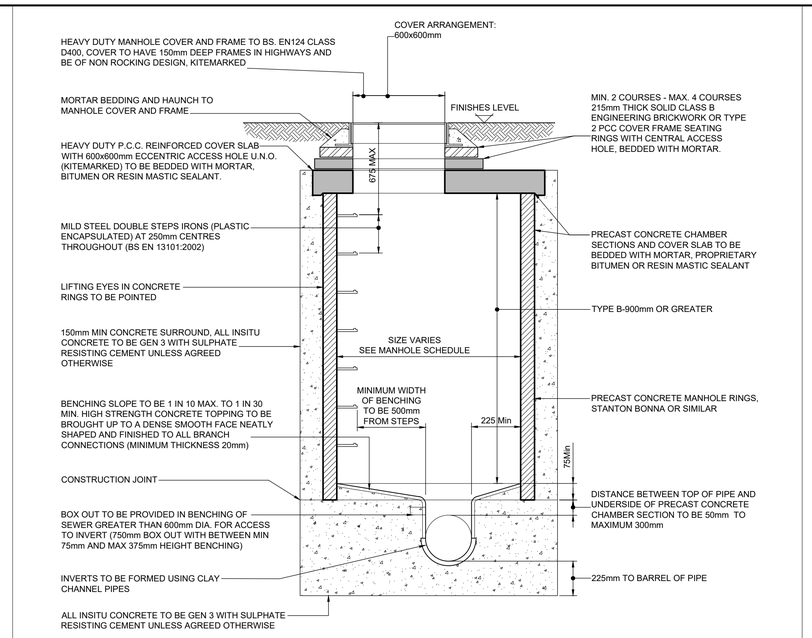

SECTION
MANHOLE TYPE B - DEPTH 1.5-3.0m SOFFIT

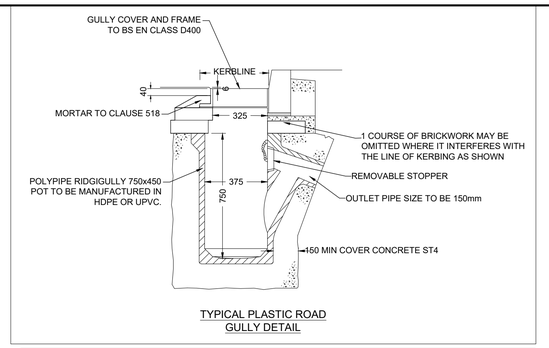

TYPICAL PLASTIC ROAD GULLY DETAIL

YARD GULLY WITH LIGHT DUTY (1 TONNE) GRID - CODE RGP5
WITH MEDIUM DUTY (5 TONNE) GRID - CODE RGP7.

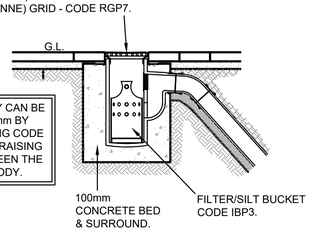

YARD GULLY
(SHOWN AS HEPWORTH PRODUCT BUT OTHER SIMILAR CAN BE USED)

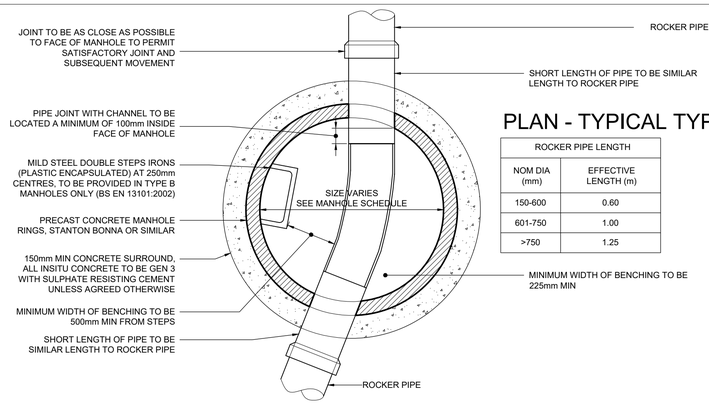

PLAN - TYPICAL TYPE A/B MH

ROCKER PIPE LENGTH	
NOM DIA (mm)	EFFECTIVE LENGTH (m)
150-600	0.60
601-750	1.00
>750	1.25

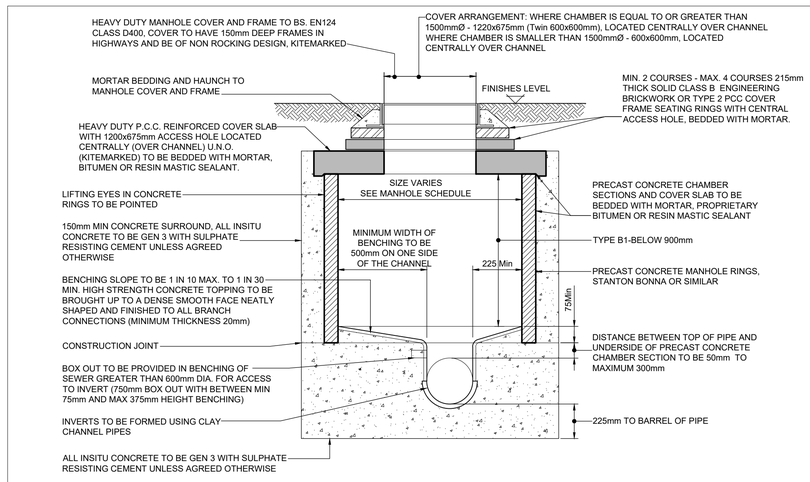

SECTION
MANHOLE TYPE C - DEPTH 1-1.5m SOFFIT

DRAINAGE NOTES

1. THE CONTRACTOR SHALL ALLOW FOR THE PROTECTION, TEMPORARY AND PERMANENT SUPPORT AND DIVERSION WORKS AS NECESSARY, TO ALL EXISTING SERVICES.

2. THE CONTRACTOR SHALL ALLOW FOR DEALING WITH SURFACE WATER RUN-OFF INTO EXCAVATIONS AND FROM GROUNDWATER BY MEANS OF SUMPS, PUMPING AND DE-WATERING AS APPROPRIATE, IN ORDER TO KEEP THE EXCAVATION AS REASONABLY DRY AS POSSIBLE DURING THE CONSTRUCTION OF THE WORKS.

3. ALL PLOT DRAINAGE WITHIN THE SITE IS TO COMPLY WITH THE REQUIREMENTS OF BSEN752 AND BUILDING REGULATIONS PART H.

4. ALL PLOT DRAINAGE PIPES TO BE LAID IN TRENCHES BEDDED CLASS 'S' ON SINGLE SIZED AGGREGATE AND BACKFILLED WITH APPROVED SELECTED FILL (40mm DOWN) REUSED FROM EXCAVATED MATERIAL. UNDER BUILDINGS AND WHERE COVER TO INVERT IS LESS THAN 600mm UNDER TRAFFICKED AREAS, PIPES TO BE CAST IN CONCRETE (CLASS Z BEDDING).

5. SELECTED BACKFILL MATERIAL SHALL CONSIST OF UNIFORM EXCAVATED MATERIAL, FREE FROM STONES LARGER THAN 40mm, CLAY LUMPS LARGER THAN 75mm, TREE ROOTS, CONTAMINATED MATERIAL. SELECTED BACKFILL MATERIAL IS TO BE PLACED IN LAYERS NOT EXCEEDING 150mm THICKNESS. THE MATERIAL SHALL BE COMPACTED TO ACHIEVE NOT LESS THAN 95% OF THE MAXIMUM DRY DENSITY AS DETERMINED IN LABORATORY COMPACTION TESTS. SUFFICIENT TESTING SHALL BE CARRIED OUT, BY THE CONTRACTOR, TO DEMONSTRATE THIS IS ACHIEVED (NUMBER AND FREQUENCY OF TESTING TO BE AGREED). WHERE THE MOISTURE CONTENT OF THE MATERIAL PROHIBITS COMPLIANCE WITH THE ABOVE 6F1 OR SIMILAR IMPORTED MATERIAL SHALL BE USED.

6. CLASS Z CONCRETE ENCASEMENT REQUIRED WHERE VERTICAL CLEARANCE BETWEEN THE TWO PIPES IS LESS THAN 300mm.

7. ALL PIPEWORK WITHIN MANHOLES ARE TO BE LAID SOFFIT TO SOFFIT (UNO). ALL CHAMBER INVERT LEVELS ARE FOR THE OUTGOING PIPE LEVELS. BACKDROP PIPEWORK SHALL BE CONNECTED AT SOFFIT TO SOFFIT WITH THE RODDING ACCESS LEVEL SPECIFIED.

8. ALL DRAINS TO BE LAID IN ACCORDANCE WITH THE MANUFACTURERS GUIDANCE.

9. ALL DRAINAGE INSITU CONCRETE SHALL BE GEN3 (U.N.O).

10. ANY GRADIENTS OF DRAINS INDICATED ARE INDICATIVE ONLY AND THE CONTRACTOR SHALL INSTALL THE DRAINS TO THE SPECIFIED LEVELS SHOWN FOR EACH MANHOLE. CATCHPIT INVERT LEVELS ARE FOR THE OUTGOING PIPE WITH THE SUMP LEVEL SPECIFIED SEPARATELY.

11. CO-ORDINATE SETTING OUT INFORMATION FOR MANHOLES IS TO THE INTERSECTION THE DRAINS AND NOT THE CENTRE OF THE MANHOLE.

12. COVER LEVELS OF THE MANHOLES ARE PROVISIONAL AND SUBJECT TO ADJUSTMENT ON SITE TO SUIT THE FINISHED GROUND LEVELS. ALL EXTERNAL WORKS CONSTRUCTION AREAS TO BE AS LOCATED BY THE ARCHITECT.

13. GULLY GRATINGS AND STEEL CHANNEL COVERS ARE TO BE IN ACCORDANCE WITH BSEN124 AS FOLLOWS:
   a) AREAS SUBJECT TO VEHICULAR OVERRUN: CLASS D400 MINIMUM.
   b) AREAS NOT SUBJECT TO REGULAR VEHICLE OVERRUN (ADJACENT TO KERBS ETC): CLASS C250.
   c) GULLY GRATES ADJACENT TO KERBS SHALL BE HINGED ON THE SIDE OF THE TRAFFIC DIRECTION (LEFT HAND SIDE).

14. ALL BRICKWORK IN CONNECTION WITH DRAINAGE IS TO BE SOLID CLASS B ENGINEERING BRICK TO BS3921.

15. ALL PRECAST CONCRETE PIPES, CHAMBER PRODUCTS AND ROAD GULLIES SHALL BE TO BS5911 AND BE KITEMARKED.

16. ALL DRAINAGE INSITU CONCRETE SHALL BE GEN3.

17. ALL INSITU AND CONCRETE PRODUCTS SHALL COMPLY WITH THE REQUIREMENTS FOR SULPHATE EXPOSURE IN ACCORDANCE WITH BRE SPECIAL DIGEST 1, CONCRETE IN AGGRESSIVE GROUND (2001) PART 1: TABLE 2.

18. UPON COMPLETION OF THE WORKS THE CONTRACTOR SHALL CLEAN ALL DRAINAGE BY JETTING, REMOVING ALL DEBRIS FROM SITE. NO DEBRIS SHALL BE PERMITTED TO ENTER THE EXISTING DRAINAGE SYSTEM.

19. CONSTRUCTION JOINTS IN CONCRETE SURROUND MUST NOT BE WITHIN 150MM OF CHAMBER/SHAFT RING JOINTS. ROCKER PIPES TO BE SURROUNDED WITH CONCRETE LOCATED 150mm MINIMUM 200mm MAXIMUM FROM THE FIRST FLEXIBLE JOINT TO THE MANHOLE WALL.

20. SOFT SPOTS IN THE TRENCH FORMATION SHALL BE REMOVED AND REPLACED WITH GRANULAR BEDDING UNLESS INSTRUCTED OTHERWISE.

21. LATERAL CONNECTIONS IN BETWEEN MANHOLE RUNS SHALL BE FORMED BY USING PURPOSE MADE JUNCTION FITTINGS. BEND FITTINGS SHALL BE PROVIDED WHERE APPROPRIATE TO DIRECT THE FLOW INTO MAIN RUNS.

22. IT SHALL BE THE CONTRACTORS RESPONSIBILITY TO LIAISE WITH BUILDING CONTROL FOR APPROVALS, INTERIM INSPECTION, SNAGGING AND FINAL INSPECTIONS OF THEIR WORK.

23. AT THE CONCLUSION OF THE WORKS THE CONTRACTOR SHALL PROVIDE A MARKED UP DRAWING TO RECORD ANY AS BUILT VARIATIONS.

24. ALL ROOF RWDP TO BE 100Ø. ALL OTHER PLOT SURFACE WATER DRAINAGE TO BE 150Ø UNLESS STATED OTHERWISE. ALL PLOT FOUL WATER PIPES TO BE 100Ø UNLESS STATED OTHERWISE.

GENERAL NOTES:

1. DRAWINGS ARE TO BE READ IN CONJUNCTION WITH ALL RELEVANT SPECIFICATIONS, ENGINEERS, ARCHITECTS & SERVICES DRAWINGS, INCLUDING APPROVED BUILDERS WORK DRAWINGS. CONTRACTOR TO NOTIFY ENGINEER OF DISCREPANCIES BETWEEN STRUCTURAL DRAWINGS AND SPECIFICATIONS OR OTHER DRAWINGS.

2. DO NOT SCALE FROM THIS DRAWING, WORK TO DIMENSIONS OR CO-ORDINATES PROVIDED. ALL LEVELS ARE IN METRES AND ALL DIMENSIONS ARE IN MILLIMETRES, UNLESS OTHERWISE NOTED. ANY AMBIGUITIES, OMISSIONS AND ERRORS ON DRAWINGS, SHALL BE BROUGHT TO THE ENGINEERS ATTENTION IMMEDIATELY.

Stat	Purpose of Issue	Date	Auth
S2	FOR INFORMATION	26.06.24	WF

Rev	Description	By	Date	Chk'd	Auth
P01	FIRST ISSUE	MF	26.06.24	WF	WF

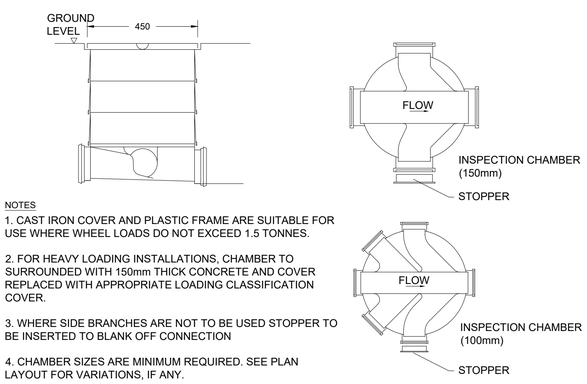

NOTES

1. CAST IRON COVER AND PLASTIC FRAME ARE SUITABLE FOR USE WHERE WHEEL LOADS DO NOT EXCEED 1.5 TONNES.

2. FOR HEAVY LOADING INSTALLATIONS, CHAMBER TO SURROUNDED WITH 150mm THICK CONCRETE AND COVER REPLACED WITH APPROPRIATE LOADING CLASSIFICATION COVER.

3. WHERE SIDE BRANCHES ARE NOT TO BE USED STOPPER TO BE INSERTED TO BLANK OFF CONNECTION

4. CHAMBER SIZES ARE MINIMUM REQUIRED. SEE PLAN LAYOUT FOR VARIATIONS, IF ANY.

5. ALL INSPECTION CHAMBERS WITH A DEPTH GREATER THAN 1.2m TO HAVE A 350mm DIAMETER REDUCING PLATE LOCATED BENEATH COVER AND FRAME TO PREVENT ACCESS.

PRECAST CONCRETE TO BS 5911:PART 2 AND BS8301 KITEMARKED, UP TO 1.0 METRE DEEP POLYPROPYLENE INSPECTION CHAMBERS TO BS 7158, BS EN 124 KITEMARKED, MIN. 450mm DIAMETER UPTO 2.0m DEEP BY HEPWORTH OR SIMILAR APPROVED

POLY-PROPOLENE INSPECTION CHAMBER (PPIC)

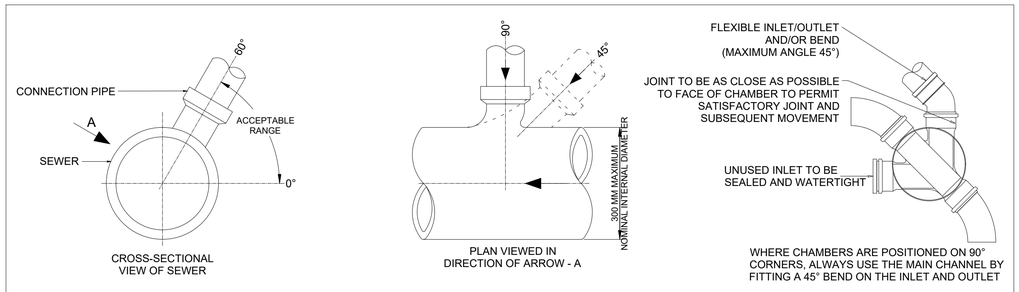

CONNECTIONS TO NETWORK

Lynas Engineers
Wilton Centre
Redcar
TS10 4RF
Tel: +44 (0)1642 438273
www.lynasengineers.com

Copyright © Lynas Engineers Limited (2020)

Client: Mandale Homes

Project: HANGING HEATON BATLEY

Title: PROPOSED DRAINAGE DETAILS SHEET 2

Sheet Size	Original Scale	Designed/Drawn	Checked	Authorised
A1	1:250	MF Date 26.06.24	WF Date 26.06.24	RL Date 26.06.24

Status	Drawing Number	Rev
S2	24004-LE-00-ZZ-DR-D-0111	P01