HIGHWAYS & STREETSCENE
HIGHWAYS STRUCTURES

Civic Centre 1
High Street
Huddersfield
HD1 2NE

APPROVAL IN PRINCIPLE FOR DESIGN OF

Private Mass Concrete Retaining Walls in a New Residential Development off Westgate, Cleckheaton

Commented [CR1]: Please retain our comment in any further submissions.

Structure reference:	**K61200A & B**
Date:	**29/10/2025**
Revision:	**P4~~3~~**
Status:	**Draft**
Prepared by:	**D.J. Phillipson**
Checked by:	**D. Rogers**

Information is available in large print, braille, audio tape, or PC disk on request

DOCUMENT CONTROL

Structure title: Private Brick Face Mass Concrete Retaining Walls in a New Development off, Westgate, Cleckheaton

Structure reference: K61200A & B

Date: 29/10/2025

Revision: -P43

Status: Draft

Document issue record

Issue	Status	Prepared	Date	Checked	Date	Approved	Date
-	Appr'l	D.J. Phillipson	20/06/25	D. Rogers	20/06/25	D. Rogers	20/06/25
P1	Appr'l	D.J. Phillipson	09/07/25	D. Rogers	09/07/25	D. Rogers	09/07/25
P2	Draft	D.J. Phillipson	02/09/25	D. Rogers	02/09/25	D. Rogers	02/09/25
P3	Draft	D.J. Phillipson	29/10/25	D. Rogers	29/10/25	D. Rogers	29/10/25
P4	Draft	D.J. Phillipson	03/12/25	D. Rogers	03/12/25	D. Rogers	03/12/25

PROJECT DETAILS

Name of project: Westgate, Cleckheaton

Name of Bridge or Structure: Private Brick Face Mass Concrete Retaining Walls

Structure reference no: K61200A & B

Summary:

AIP is to cover the design of the proposed Gravity Mass Concrete Retaining Walls adjacent, Plots No's 30-32 & 33-43.

1. HIGHWAY DETAILS

1.1. Type of highway

1.1.1. Location and OS Map / Grid reference

Location:	Westgate, Cleckheaton
OS Map:	SE184250
Grid Ref (X, Y):	(418400,42500)

1.2. Permitted traffic speed

30 m.p.h.

1.3. Existing restrictions

The walls form the boundary to the Plot garden areas, access is restricted by the plot layout and associated boundaries.

2. SITE DETAILS

2.1. Obstacles crossed

None.

3. PROPOSED STRUCTURE

3.1. Description of structure and design working life

The Proposed Brick faced mass concrete wall is required to support land forming the gardens of Plots No's 30-32 & 33-43

The proposed structures are Mass Concrete Gravity retaining walls to a design working life of 120 years, (category 5) in accordance with CD350 – The Design of Highway Structures – Table 7.1.

The total mass of the mass concrete retaining walls will be designed to provide the necessary structural support to the private land.

3.2. Structural type

Mass Concrete Retaining Wall, formed using Concrete Blocks.

3.3. Foundation type

The foundations are ground bearing strip foundation, a maximum bearing pressure of 75kN/m^2 has been assumed, Foundations are sat on clays which will provide the 75kN/m^2, drawing QD1766-14-11 & 12, section 7 is sat on fill material, a geotechnical engineer will confirm the required bearing capacity to design to.

Commented [CR2]: Typo?

3.4. Span arrangements

The maximum retained height is in the order of 1.875m.

3.5. Articulation arrangements

Movement Joints are to be provided at a maximum of 10m centre to centre.

3.6. Classes and levels

3.6.1. Consequence class

Consequence class to be CC2 (medium consequence for loss of human life, economic, social or environmental consequences considerable)

3.6.2. Reliability class

Reliability class is to be associated with the consequence class detailed in 3.6.1. Reliability class to be RC2.

Factor for actions to be used KFI = 1,0

3.6.3. **Inspection level**

Inspection Level 2 – Normal inspection (inspection in accordance with the procedures of the inspecting organisation).

3.7. Road restraint systems requirements

A close boarded 1.8m high timber fence will be constructed behind the retaining wall as the boundary treatment.

3.8. Proposals for Water Management

A 100mm diameter perforated longitudinal drain encased in free draining material and taken to a suitable outlet together with 64mm square pvc weep pipes at 2m centres.

3.9. Proposed arrangements for future maintenance and inspection

3.9.1. **Traffic management**

Any traffic management system requirements will be agreed with Kirklees Council's Highways department prior to the start of works (where applicable)

3.9.2. **Arrangements for future maintenance and inspection of structure. Access arrangements to structure.**

Inspection will be from the adopted highway

3.10. Environment and sustainability

Constructed from Concrete, brickwork, concrete Blockwork and Stone backfill, which will be recyclable at end of life.

3.11. Durability. Materials and finishes

Item	Material	Finish / Location
Concrete Foundation	Grade RC32/40 XD3	
Brickwork	Class F2, S2 conforming to BS EN 771-1	Finish as manufacturers specification, tied to blockwork using type 2 stainless steel wall ties @ 450mm horizontal and vertical centres.
Blockwork	conforming to BS EN 771-3	Retaining wall construction behind brickwork face

Item	Material	Finish / Location
Reinforcement	Grade B500B conforming to BS 4449:2005	Foundation
Backfill material	Type 3 aggregate in compliance with specification for highway works, (SHW).	Backfill to structure.
Drainage to rear of Wall	100mmØ semi perforated twin wall drainage pipe laid to positive outlet. Drain to be surrounded with single size drainage stone, together with 64mm square pvc weepholes at 2m c/c, min 150mm above ground level.	Rear of Wall
Waterproofing	Bituminous paint in accordance with series 2000 of MCHW.	Rear of Wall

3.12. Risks and hazards considered for design, execution, maintenance and demolition. Consultation with and/or agreement from Overseeing Organisation

The Risks include

- Maintenance of access for both site operatives and construction traffic
- Live traffic
- Safety of highway users
- Working at height
- Deep Excavation
- Existing utility services
- Manual handling of heavy objects
- Maintenance of close Boarded Fence to prevent Falls.

3.13. Acceptance of recommendations of the structures Options Report (reference date) to be used in the design and reasons for any proposed changes (including estimated cost of proposed structure). If an Options Report has not been prepared, state the reasons for the selected solution and reasons for rejecting alternatives (including comparative whole life costs with dates of estimates).

Lock and Load system discounted, due to negligible heights of walls.

Costs T.B.C.

3.14. Proposed arrangements for construction

3.14.1. Construction of structure

Outline Method Statement

- Agree fence line with Kirklees Highways to enable access to carry out the works, including any traffic management requirements.
- Excavate Foundations
- Construct Foundations and substructure masonry to existing ground level
- Apply damp proofing
- Construct remainder of retaining wall
- Apply damp proofing
- Backfill retaining wall upto required level.

3.14.2. Traffic management

Main construction to be from within site boundary, should there be a requirement to carry out works from the adjacent highway, all traffic management will be agreed with Kirklees Highways Streetworks section prior to start on site (where applicable).

3.14.3. Service diversions

No existing services are known to be present. However, utilities plans will be obtained and the presence of private services (if any) will be confirmed prior to the commencement of works.

3.14.4. Interface with existing structures

N/A

3.15. Deliberate damage and security

Mass Concrete retaining wall with clay brickwork facing, are a robust material to resist vandalism.

4. DESIGN CRITERIA

4.1. Actions

4.1.1. Permanent actions

All permanent actions as outlined in BS EN 1991-1-1 and the national annex.

Backfill density to be 16-20kN/m³
Concrete density to be 25kN/m³
Surfacing density to be 22kN/m³

4.1.2. Snow, Wind and Thermal actions

Wind actions as outlined in BS EN 1991-1-3 and the National Annex..
Thermal actions to blockwork and brickwork to be resisted by movement joints as manufacturers recommendations, maximum 10m centres.

4.1.3. Actions relating to normal traffic under AW regulations and C&U regulations

N/A.

4.1.4. Actions relating to General Order traffic under STGO regulations

N/A

4.1.5. Footway or footbridge variable actions

5kN/m^2 has been allowed for the surcharge load in accordance with BS8002:2015 (Table 7).

4.1.6. Actions relating to Special Order traffic, provision for exceptional abnormal indivisible loads including location of vehicle track on deck cross-section

N/A

4.1.7. Accidental actions

Accidental actions to be in accordance with 4.7.3.1 of BS EN 1991-2 and NA to BS EN 1991-2., construction traffic will be kept minimum 1.5m from back face of retaining walls, so as to mitigate any additional surcharge.

4.1.8. **Action during construction**

The retaining wall is to be backfilled in accordance with the MCHW and surcharge loadings are to be derived based on the requirements of PD 6694-1:2011. Therefore, compaction pressures imposed on the wall during construction do not need to be considered. (PD 6694-1:2011 CL 7.3.3)

4.1.9. **Any special action not covered above**

N/A

4.2. Heavy or high load route requirements and arrangements being made to preserve the route, including any provision for future heavier loads or future widening

N/A

4.3. Proposed minimum headroom provided

N/A

4.4. Set out measures that will be incorporated into design to minimise maintenance

Low maintenance materials used, concrete and stone

4.5. Authorities consulted and any special conditions required

Kirklees Council, Highways

4.6. Standards and documents listed in the Technical Approval Schedule

TAS dated May 2025 - See appendix A.

Additional relevant DoT standards published since the above edition of the TAS including amendments, are listed as follows:

'None'.

4.7. Proposed departures from standards listed in 4.6

The proposed retaining walls will be private structures and as such their maintenance responsibility will solely rest with the adjoining properties title holder/s. This will need be shown on the land registry title deeds and plans for the relevant properties (i.e. the maintenance responsibility for the retaining walls is shown using an inverted "T" symbol). A copy of the land registry deed plan will be sent the Council's Highway Structures section for record purposes.

4.8. Proposed departures from standards concerning methods for dealing with aspects not covered by standards listed in 4.6

Close Boarded Timber Fence to the top of the retaining wall.

4.9. Proposed safety critical fixings

N/A

5. STRUCTURAL ANALYSIS

5.1. Methods of analysis proposed for superstructure, substructure and foundations

The retaining wall has been analysed as a Mass Gravity retaining wall in The 'Masterseries' Software, to the information supplied by Eastwood Consulting Engineers, dated July 2023

The retaining wall components shall be designed in accordance with BS EN 1997-1 Geotechnical Design, General Rules.

The wall shall be analysed based on a metre strip method for Design Approach 1, Combinations 1 & 2 in accordance with BS EN 1997-1.
Each element shall be designed for the worst combination of loads with those stated in Section 4.1.

Ultimate limit state checks shall include, but are not limited to:

- Bearing capacity failure
- Overturning
- Sliding
- Global Instability

5.2. Description and diagram of idealised structure to be used for analysis

Structure has been designed as a Mass Gravity wall, based on the cross sectional area.

5.3. Assumptions intended for calculation of structural element stiffness

Gross Uncracked properties are used for the overall stability design.

The mass concrete retaining wall will be analysed as a gravity structure to resist lateral and vertical loads derived in accordance with section 4.1 above.

Hydrostatic pressure has been ignored from the calculations in this instance. This is because the structure will be backfilled with granular fill in addition to installing a longitudinal perforated drain which will allow the free flow of water behind the structure. This will prevent any significant build-up of hydrostatic pressure being applied to the wall.

5.4. Proposed range of soil parameters to be used in the design of earth retaining elements

Wall designed for a ground bearing pressure of maximum 75kPa, or in agreement with Geotechnical engineer for a lesser pressure.

K_a = 0.227
K_0, = 0.426
K_p, = Not Permitted

6. GEOTECHNICAL CONDITIONS

6.1. Acceptance of recommendations of the ground investigation report (references/dates) to be used in the design and reasons for any proposed changes

Foundations are to be designed to impose a maximum of 75kPa bearing pressure. Site investigations have concluded a bearing capacity of 150kPa for the substrata upon which the walls will be founded, and this will be confirmed on site when excavations take place, Revisions to the design of the wall will be undertaken accordingly in the event of any changes to this assumption which impact on the design of the walls.

Formatted: Font: 12 pt, Font color: Auto

Formatted: Normal, Justified, Indent: Left: 2.25 cm

6.2. Differential settlement to be allowed for in the design of the structure

Differential settlement within each length of retaining wall is anticipated to be negligible (less than 25mm) as the loads in adjacent positions along each wall, and the ground conditions beneath each wall, are similar, foundations are to be placed on ground to suit a maximum 75kPa or to be confirmed by a geotechnical engineer.

6.3. If the ground investigation report is not yet available, state when the results are expected and list the sources of information used to justify the preliminary choice of foundations

N/A, previously submitted.

7. CHECK

7.1. Proposed Category and Design Supervision Level

Wall is Category 1 for CG300 (For additional Wind Loading)

DSL2, (refer to CD 350 Table 7.2).

7.2. If Category 3, name of proposed Independent Checker

N/A

7.3. Erection proposals or temporary works for which Types S and P Proposals will be required, listing structural parts of the permanent structure affected with reasons

The design and installation of all temporary works to facilitate the construction will be the responsibility of the Principal Contractor.

8. DRAWINGS AND DOCUMENTS

8.1. List of drawings (including numbers) and documents accompanying the submission

8.1.1. Drawings (See appendix B)

Reference	Title
BY00099-STH-B01-XX-DR-S-1003, Rev-B	Retaining Wall Heights from Formation
BY00099-STH-B01-XX-DR-S-1007, Rev-A	~~Mass Concrete Wall~~AIP Walls Land Drain
QD1776-14-10 – Rev C~~B~~	Mass Concrete and Gillcon Retaining Walls Location Plans
QD1776-14-11 – Rev C~~B~~	Mass Concrete Retaining Wall Sections (Sheet 1 of 4)
QD1776-14-12 – Rev A	Mass Concrete Retaining Wall Sections (Sheet 2 of 4)

8.1.2. Documents (See appendix C)

Reference	Title

9. THE ABOVE IS SUBMITTED FOR ACCEPTANCE

Design Team Leader	
Signed	
Name	D.J. Phillipson
Engineering Qualifications	BEng(Hons), CEng, M.IStructE
Name of Organisation	Queensberry Design Ltd.
Date	~~2~~903/1~~2~~0/2025
Check Team Leader	
Signed	
Name	D. Rogers
Engineering Qualifications	BSc(Hons), MSc
Name of Organisation	Queensberry Design Ltd.
Date	~~2~~903/~~1~~012/2025

10. THE ABOVE IS REJECTED/AGREED SUBJECT TO THE AMENDMENTS AND CONDITIONS SHOWN BELOW

Commented [CR3]: TAA reminder notes only:
1.Any changes to the design assumptions set out in this AIP will require an addendum for the approval of the TAA.

Signed	
Name	**Farhad Khatibi**
Position held	**Bridges & Structures Manager**
Engineering Qualifications	**BSc (Hons) Civil Eng, MSc**
TAA	**Kirklees Council**
Date	

For and on behalf of Kirklees Council

APPENDIX A

LIST OF RELEVANT DESIGN DOCUMENTS

APPROVAL IN PRINCIPLE FOR DESIGN

Struc Ref: K61200A & B
Rev P~~3~~4
Scheme title: Residential Development off Westgate, Cleckheaton
Structure title: Private Mass Concrete Retaining Walls
03~~29~~/12~~0~~/2025

TECHNICAL APPROVAL SCHEDULE (TAS)

Schedule of Documents Relating to Design of Highway Bridges and Structures

(All documents are taken to include revisions current as of May 2025)

Additional standards needed for a particular design should be added to the section at the bottom of the TAS.

The Designer is responsible for ensuring that the standards and references given in the schedule are correct and up to date. Tick all the documents used (✓)

Used (✓)	Eurocodes and associated UK National Annexes			
	Eurocode part	**Title**	**Amendment / Corrigenda**	***Notes***
	Eurocode 0	**Basis of structural design**		
✓	BS EN 1990:2002 +A1:2005	Eurocode 0: Basis of structural design	+A1:2005 Incorporating corrigenda December 2008 and April 2010	See CD 350 section 7 for additional guidance. This document is to be used until 30 March 2028. After which it will be superseded by BS EN 1990:2023
✓	NA to BS EN 1990:2002 + A1:2005	UK National Annex to Eurocode 0 Basis of structural design	National Amendment No.1	See CD 350 section 7 for additional guidance.
	Eurocode 1	**Actions on structures**		
✓	**BS EN 1991-1-1:2002**	**Eurocode 1: Actions on structures. General Actions. Densities, self-weight, imposed load for buildings**	**Corrigenda December 2004 and March 2009**	**This document is to be used until 30 March 2028. After which it will be superseded by BS EN 1991-1-1:2025**
✓	NA to BS EN 1991-1-1:2002	UK National Annex to Eurocode 1: Actions on structures. General Actions. Densities, self-weight, imposed load for buildings	Corrigenda July 2019	

APPROVAL IN PRINCIPLE FOR DESIGN

Struc Ref: K61200A & B
Rev P~~43~~
03~~29~~/12~~0~~/2025

Scheme title: Residential Development off Westgate, Cleckheaton
Structure title: Private Mass Concrete Retaining Walls

Used (✓)	Eurocodes and associated UK National Annexes			
	Eurocode part	**Title**	**Amendment / Corrigenda**	***Notes***
	BS EN 1991-1-3:2003 +A1:2015	**Eurocode 1: Actions on structures. General Actions. Snow loads**	**+A1:2015 Incorporating corrigenda December 2004 and March 2009**	**This document is to be used until 30 March 2028. After which it will be superseded by BS EN 1991-1-3:2025**
✓	NA + A2:18 to BS EN 1991-1-3:2003+A1:2015	UK National Annex to Eurocode 1: Actions on structures. General Actions. Snow loads	+A2:2018 Incorporating corrigenda June 2007, December 2015 and October 2018	
✓	BS EN 1991-1-4:2005 +A1:2010	Eurocode 1: Actions on structures. General Actions. Wind actions	+A1:2010 Corrigenda July 2009 and January 2010	
✓	NA to BS EN 1991-1-4:2005 + A1:2010	UK National Annex to Eurocode 1: Actions on structures. General Actions. Wind actions	National Amendment No.1	
✓	**BS EN 1991-1-5:2003**	**Eurocode 1: Actions on structures. General Actions. Thermal actions**	**Corrigenda December 2004 and March 2009**	**This document is to be used until 30 March 2028. After which it will be superseded by BS EN 1991-1-5:2025**
✓	NA to BS EN 1991-1-5:2003	UK National Annex to Eurocode 1: Actions on structures. General Actions. Thermal actions	-	
✓	BS EN 1991-1-6:2005	Eurocode 1: Actions on structures. General Actions. Actions during execution	Corrigenda July 2008, November 2012 and February 2013	
✓	NA to BS EN 1991-1-6:2005	UK National Annex to Eurocode 1: Actions on structures. General Actions. Actions during execution	-	

Used (✓)	Eurocodes and associated UK National Annexes			
	Eurocode part	**Title**	**Amendment / Corrigenda**	***Notes***
✓	BS EN 1991-1-7:2006 +A1:2014	Eurocode 1: Actions on structures. General Actions. Accidental actions	+A1: 2014 Corrigendum February 2010	
✓	NA+A1 to BS EN 1991-1-7:2006+A1:2014	UK National Annex to Eurocode 1: Actions on structures. Part 1-7 : Accidental actions	+A1:2014 Incorporating corrigenda August 2014 and November 2015	See CD 350 for additional guidance.
	BS EN 1991-2:2003	Eurocode 1: Actions on structures. Traffic loads on bridges	Corrigenda December 2004 and February 2010	See CD 350 section 7 for additional guidance. This document is to be used until 30 March 2028. After which it will be superseded by BS EN 1991-2:2023
	NA +A1:2020 to BS EN 1991-2:2003	UK National Annex to Eurocode 1: Actions on structures. Traffic loads on bridges	Corrigendum No.1 Amendment June 2020	See CD 350 section 7 for additional guidance.
	Eurocode 2	**Design of concrete structures**		
✓	BS EN 1992-1-1:2004 + A1:2014	Eurocode 2: Design of concrete structures– Part 1-1: General rules and rules for buildings	Incorporating corrigendum January 2008, November 2010 and January 2014	This document is to be used until 30 March 2028. After which it will be superseded by BS EN 1992-1-1:2023
✓	NA + A2:2014 to BS EN 1992-1-1:2004 + A1:2014	UK National Annex to Eurocode 2: Design of concrete structures – Part 1-1: General rules and rules for buildings		

Used (✓)	Eurocodes and associated UK National Annexes			
	Eurocode part	**Title**	**Amendment / Corrigenda**	***Notes***
	BS EN 1992-2:2005	Eurocode 2: Design of concrete structures – Part 2: Concrete bridges – Design and detailing rules	Corrigendum July 2008	This document is to be used until 30 March 2028. After which it will be superseded by BS EN 1992-1-1:2023
	NA to BS EN 1992-2:2005	UK National Annex to Eurocode 2: Design of concrete structure – Part 2: Concrete bridges – Design and detailing rules	-	
	BS EN 1992-3:2006	Eurocode 2: Design of concrete structures – Part 3: Liquid retaining and containment structures		This document is to be used until 30 March 2028. After which it will be superseded by BS EN 1992-1-1:2023
	NA to BS EN 1992-3:2006	UK National Annex to Eurocode 2: Design of concrete structures – Part 3: Liquid retaining and containment structures	-	
	BS EN 1992-4:2018	Eurocode 2: Design of concrete structures – Part 4: Design of fastenings for use in concrete		
	NA to BS EN 1992-4:2018	UK National Annex to Eurocode 2: Design of concrete structures – Part 4: Design of fastenings for use in concrete		
	Eurocode 3	**Design of steel structures**		
	BS EN 1993-1-1:2005 + A1:2014	Eurocode 3: Design of steel structures – Part 1-1 General rules and rules for buildings	Corrigenda February 2006 and April 2009	This document is to be used until 30 March 2028. After which it will be superseded by BS EN 1993-1-1:2022

Used (✓)	Eurocodes and associated UK National Annexes			
	Eurocode part	**Title**	**Amendment / Corrigenda**	***Notes***
	NA + A1:2014 to BS EN 1993-1-1:2005 + A1:2014	UK National Annex to Eurocode 3: Design of steel structures – Part 1-1 General rules and rules for buildings	-	
	BS EN 1993-1-3:2006	Eurocode 3: Design of steel structures – Part 1-3 General rules – Supplementary rules for cold-formed members and sheeting	Corrigendum November 2009	This document is to be used until 30 March 2028. After which it will be superseded by BS EN 1993-1-3:2024
	NA to BS EN 1993-1-3:2006	UK National Annex to Eurocode 3: Design of steel structures – Part 1-3 Supplementary rules for cold-formed members and sheeting	-	
	BS EN 1993-1-4:2006 + A2:2020	Eurocode 3: Design of steel structures – Part 1-4 General rules – Supplementary rules for stainless steels	+ A1:2015 Amendment No. 1 + A2:2020 Amendment No. 2	Supersedes BS EN 1993-1-4:2006 + A1:2015
	NA+A1:15 to BS EN 1993-1-4:2006+A1:2015	UK National Annex to Eurocode 3: Design of steel structures – Part 1-4 Supplementary rules for stainless steels	+ A1:2015 Amendment No. 1	
	BS EN 1993-1-5:2006+A2:2019	Eurocode 3: Design of steel structures – Part 1-5 Plated structural elements	Corrigendum April 2009, +A1:2017 Amendment No. 2, +A2:2019	This document is to be used until 30 March 2028. After which it will be superseded by BS EN 1993-1-5:2024
	NA+A1:2016 to BS EN 1993-1-5:2006	UK National Annex to Eurocode 3: Design of steel structures – Part 1-5 Plated structural elements	+ A1:2016 Amendment No. 1	

APPROVAL IN PRINCIPLE FOR DESIGN

Struc Ref: K61200A & B
Rev P43
0329/1120/2025

Scheme title: Residential Development off Westgate, Cleckheaton
Structure title: Private Mass Concrete Retaining Walls

Used (✓)	Eurocodes and associated UK National Annexes			
	Eurocode part	**Title**	**Amendment / Corrigenda**	***Notes***
	BS EN 1993-1-6:2007+ A1:2017	Eurocode 3: Design of steel structures – Part 1-6 Strength and stability of shell structures	+ A1:2017 Amendment No. 1	
	BS EN 1993-1-7:2007	**Eurocode 3: Design of steel structures – Part 1-7 Plated structures subject to out of plane loading**	**Corrigendum April 2009**	**This document is to be used until 30 March 2028. After which it will be superseded by BS EN 1993-1-7:2025**
	BS EN 1993-1-8:2005	Eurocode 3: Design of steel structures – Part 1-8 Design of joints	Corrigenda December 2005, September 2006, July 2009 and August 2010	This document is to be used until 30 March 2028. After which it will be superseded by BS EN 1993-1-8:2024
	NA to BS EN 1993-1-8:2005	UK National Annex to Eurocode 3: Design of steel structures – Part 1-8 Design of joints	-	
	BS EN 1993-1-9:2005	Eurocode 3: Design of steel structures – Part 1-9 Fatigue	Corrigenda December 2005, September 2006 and April 2009	
	NA to BS EN 1993-1-9:2005	UK National Annex to Eurocode 3: Design of steel structures – Part 1-9 Fatigue	-	
	BS EN 1993-1-10:2005	Eurocode 3: Design of steel structures – Part 1-10 Material toughness and through-thickness properties	Corrigenda December 2005, September 2006 and March 2009	
	NA to BS EN 1993-1-10:2005	UK National Annex to Eurocode 3: Design of steel structures – Part 1-10 Material toughness and through thickness properties	-	

Used (✓)	Eurocodes and associated UK National Annexes			
	Eurocode part	**Title**	**Amendment / Corrigenda**	***Notes***
	BS EN 1993-1-11:2006	Eurocode 3: Design of steel structures – Part 1-11 Design of structures with tension components	Corrigendum April 2009	
	NA to BS EN 1993-1-11:2006	UK National Annex to Eurocode 3: Design of steel structures – Part 1-11 Design of structures with tension components	-	
	BS EN 1993-1-12:2007	Eurocode 3: Design of steel structures – Part 1-12 Additional rules for the extension of EN 1993 up to steel grades S 700	Corrigendum April 2009	
	NA to BS EN 1993-1-12:2007	UK National Annex to Eurocode 3: Design of steel structures – Part 1-12 Additional rules for the extension of EN 1993 up to steel grades S 700	-	
	BS EN 1993-2:2006	Eurocode 3: Design of steel structures – Part 2 Steel bridges	Corrigendum July 2009	
	NA + A1:2012 to BS EN 1993-2:2006	UK National Annex to Eurocode 3: Design of steel structures – Part 2 Steel bridges	+ A1:2012	
	BS EN 1993-5:2007	Eurocode 3: Design of steel structures – Part 5 Piling	Corrigendum May 2009	
	NA + A1:2012 to BS EN 1993-5:2007	UK National Annex to Eurocode 3: Design of steel structures – Part 5 Piling	+ A1:2012	
	Eurocode 4	**Design of composite steel and concrete structures**		
	BS EN 1994-1-1:2004	Eurocode 4: Design of composite steel and concrete structures – Part 1-1 General rules and rules for buildings	Corrigendum April 2009	

Used (✓)	Eurocodes and associated UK National Annexes			
	Eurocode part	**Title**	**Amendment / Corrigenda**	***Notes***
	NA to BS EN 1994-1-1:2004	UK National Annex to Eurocode 4: Design of composite steel and concrete structures – Part 1-1 General rules and rules for buildings	-	
	BS EN 1994-2:2005	Eurocode 4: Design of composite steel and concrete structures – Part 2 General rules and rules for bridges	Corrigendum July 2008	
	NA to BS EN 1994-2:2005	UK National Annex to Eurocode 4: Design of composite steel and concrete structures – Part 2 General rules and rules for bridges	-	
	Eurocode 5	**Design of timber structures**		
	BS EN 1995-1-1:2004 + A2:2014	Eurocode 5: Design of timber structures – Part 1-1 General – common rules and rules for buildings	+ A2:2014 Incorporating corrigendum June 2006	
	NA to BS EN 1995-1-1:2004 + A2:2014	UK National Annex to Eurocode 5: Design of timber structures – Part 1-1 General – common rules and rules for buildings	+ A2:2014	
	BS EN 1995-2:2004	Eurocode 5: Design of timber structures – Part 2 Bridges	-	
	NA to BS EN 1995-2:2004	UK National Annex to Eurocode 5: Design of timber structures – Part 2 Bridges	-	
	Eurocode 6	**Design of masonry structures**		

Used (✓)	Eurocodes and associated UK National Annexes			
	Eurocode part	**Title**	**Amendment / Corrigenda**	***Notes***
✓	BS EN 1996-1-1:2005+A1:2012	Eurocode 6: Design of masonry structures – Part 1-1 General rules for reinforced and unreinforced masonry structures	+A1:2012 Corrigenda February 2006 and July 2009	This document is to be used until 30 March 2028. After which it will be superseded by BS EN 1996-1-1:2022
✓	NA to BS EN 1996-1-1:2005 +A1:2012	UK National Annex to Eurocode 6: Design of masonry structures – Part 1-1 General rules for reinforced and unreinforced masonry structures	+A1:2012	This document is to be used until 30 March 2028. After which it will be superseded by NA to BS EN 1996-1-1:2022
✓	BS EN 1996-2:2006	Eurocode 6: Design of masonry structures – Part 2 Design considerations, selection of materials and execution of masonry	Corrigendum September 2009	This document is to be used until 30 March 2028. After which it will be superseded by BS EN 1996-2:2024
✓	NA to BS EN 1996-2:2006	UK National Annex to Eurocode 6: Design of masonry structures – Part 2 Design considerations, selection of materials and execution of masonry	Corrigendum No.1	
✓	BS EN 1996-3:2006	Eurocode 6: Design of masonry structures – Part 3 Simplified calculation methods for unreinforced masonry structures	Corrigendum October 2009	This document is to be used until 30 March 2028. After which it will be superseded by BS EN 1996-3:2023
✓	NA +A1:2014 to BS EN 1996-3:2006	UK National Annex to Eurocode 6: Design of masonry structures – Part 3 Simplified calculation methods for unreinforced masonry structures	+A1:2014	
	Eurocode 7	**Geotechnical design**		

APPROVAL IN PRINCIPLE FOR DESIGN

Struc Ref: K61200A & B
Rev P43
0329/1120/2025

Scheme title: Residential Development off Westgate, Cleckheaton
Structure title: Private Mass Concrete Retaining Walls

Used (✓)	Eurocodes and associated UK National Annexes			
	Eurocode part	**Title**	**Amendment / Corrigenda**	***Notes***
✓	**BS EN 1997-1:2004+A1:2013**	**Eurocode 7: Geotechnical design – Part 1 General rules**	**+A1:2013 Corrigendum February 2009**	**This document is to be used until 30 March 2028. After which it will be superseded by BS EN 1990:2023, BS EN 1997-1:2024, BS EN 1997-3:2025**
✓	NA+A2:2022 to BS EN 1997-1:2004+A1:2013	UK National Annex to Eurocode 7: Geotechnical design – Part 1 General rules	+A1:2013 Incorporating Corrigendum No.1, Amendment 1 – July 2014 and Amendment 2 - 2022	Supersedes NA+A1:2014 to BS EN 1997-1:2004+A1:2013
	BS EN 1997-2:2007	**Eurocode 7: Geotechnical design – Part 2 Ground investigation and testing**	**Corrigendum June 2010**	**This document is to be used until 30 March 2028. After which it will be superseded by BS EN 1997-3:2025, BS EN 1997-2:2024**
	NA to BS EN 1997-2:2007	**UK National Annex to Eurocode 7: Geotechnical design – Part 2 Ground investigation and testing**	**-**	**This document is to be used until 30 March 2028. After which it will be superseded by NA to BS EN 1997-2:2024**
	Eurocode 8	**Design of structures for earthquake resistance**		
	BS EN 1998-1:2004 + A1:2013	Eurocode 8: Design of structures for earthquake resistance – Part 1 General rules, seismic actions and rules for buildings	Corrigendum June 2009, January 2011 and March 2013	This document is to be used until 30 March 2028. After which it will be superseded by BS EN 1998-1-1:2024

Used (✓)	Eurocodes and associated UK National Annexes			
	Eurocode part	**Title**	**Amendment / Corrigenda**	***Notes***
	NA to BS EN 1998-1:2004	UK National Annex to Eurocode 8: Design of structures for earthquake resistance – Part 1 General rules, seismic actions and rules for buildings	-	
	BS EN 1998-2:2005+A2:2011	**Eurocode 8: Design of structures for earthquake resistance – Part 2 Bridges**	**Corrigenda February 2010 and February 2012**	**This document is to be used until 30 March 2028. After which it will be superseded by BS EN 1998-2:2025**
	NA to BS EN 1998-2:2005	UK National Annex to Eurocode 8: Design of structures for earthquake resistance – Part 2 Bridges	-	
	BS EN 1998-5:2004	Eurocode 8: Design of structures for earthquake resistance – Part 5 Foundations, retaining structures and geotechnical aspects	-	This document is to be used until 30 March 2028. After which it will be superseded by BS EN 1998-5:2024
	NA to BS EN 1998-5:2004	UK National Annex to Eurocode 8: Design of structures for earthquake resistance – Part 5 Foundations, retaining structures and geotechnical aspects	-	
	Eurocode 9	**Design of aluminium structures**		
	BS EN 1999-1-1:2007 + A2:2013	Eurocode 9: Design of aluminium structures– Part 1-1 General structural rules	+ A2:2013 Incorporating corrigendum March 2014	This document is to be used until 30 March 2028. After which it will be superseded by BS EN 1999-1-1:2023

Used (✓)	Eurocodes and associated UK National Annexes			
	Eurocode part	**Title**	**Amendment / Corrigenda**	***Notes***
	NA to BS EN 1999-1-1:2007 + A1:2009	UK National Annex to Eurocode 9: Design of aluminium structures – Part 1-1 General structural rules	National Amendment No.1 Corrigendum No.1	
	BS EN 1999-1-3:2007 + A1:2011	Eurocode 9: Design of aluminium structures – Part 1-3 Structures susceptible to fatigue	+ A1:2011	This document is to be used until 30 March 2028. After which it will be superseded by BS EN 1999-1-3:2023
	NA to BS EN 1999-1-3:2007 + A1:2011	UK National Annex to Eurocode 9: Design of aluminium structures – Part 1-3 Structures susceptible to fatigue	+ A1:2011	
	BS EN 1999-1-4:2007 +A1:2011	Eurocode 9: Design of aluminium structures – Part 1-4 Cold formed structural sheeting	+ A1:2011 Corrigendum November 2009	This document is to be used until 30 March 2028. After which it will be superseded by BS EN 1999-1-4:2023
	NA to BS EN 1999-1-4:2007	UK National Annex to Eurocode 9: Design of aluminium structures – Part 1-4 Cold formed structural sheeting	-	

APPROVAL IN PRINCIPLE FOR DESIGN

Struc Ref: K61200A & B
Rev P43
0329/120/2025

Scheme title: Residential Development off Westgate, Cleckheaton
Structure title: Private Mass Concrete Retaining Walls

Used (✓)	Bsi Published Documents *For guidance only unless clauses are otherwise specified in CD 350 Appendix A.*		
	Published Document reference	**Title**	**Notes**
✓	PD 6687-1:2020	Background paper to the UK National Annexes to BS EN 1992-1 and BS EN 1992-3	Supersedes PD 6687-1:2010 See CD 350 clauses 3.6, 4.1, 4.2 and Appendix A for additional guidance. Clause 3.6 in CD 350 refers to clause 2.5 in PD 6687-1, this is now clause 4.5 in PD 6687-1 Clause 4.2 in CD 350 refers to clause 2.22 in PD 6687-1, this is now clause 4.21.4 in PD 6687-1
✓	PD 6687-2:2008	Recommendations for the design of structures to BS EN 1992-2:2005	See CD 350 clauses 4.1, 4.2 and Appendix A for additional guidance.
✓	PD 6688-1-1:2011	Recommendations for the design of structures to BS EN 1991-1-1	See CD 350 Appendix A for additional guidance.
✓	PD 6688-1-4:2015	Background paper to the UK National Annex to BS EN 1991-1-4	See CD 350 Appendix A for additional guidance.
✓	PD 6688-1-7:2009 +A1:2014	Recommendations for the design of structures to BS EN 1991-1-7	See CD350 clause 3.7 and Appendix B for additional guidance.
✓	PD 6688-2:2011	Recommendations for the design of structures to BS EN 1991-2	See CD 350 Appendix A for additional guidance.
	PD 6694-1:2011 + A1:2020	Recommendations for the design of structures subject to traffic loading to BS EN 1997-1	Incorporating Corrigendum 1 Jan 2022 & Corrigendum 2 Jul 2023 See CD 350 Appendix A for additional guidance.
	PD 6695-1-9:2008	Recommendations for the design of structures to BS EN 1993-1-9	See CD 350 Appendix A for additional guidance.
	PD 6695-1-10:2009	Recommendations for the design of structures to BS EN 1993-1-10	See CD 350 Appendix A for additional guidance.
	PD 6695-2:2008 + A1:2012 Incorporating Corrigendum No.1	Recommendation for the design of bridges to BS EN 1993	See CD 350 Appendix A for additional guidance.
	PD 6696-2:2007 + A1:2012	Background paper to BS EN 1994-2 and the UK National Annex to BS EN 1994-2	See CD 350 Appendix A for additional guidance.

Used (✓)	Bsi Published Documents *For guidance only unless clauses are otherwise specified in CD 350 Appendix A.*		
	Published Document reference	**Title**	**Notes**
	PD 6698:2009	**Recommendations for the design of structures for earthquake resistance to BS EN 1998**	**See CD 350 section 7 for additional guidance.**
	PD 6702-1:2009+A1:2019	Structural use of aluminium. Recommendations for the design of aluminium structures to BS EN 1999	Amended 31 May 2019
	PD 6703:2009	Structural bearings – Guidance on the use of structural bearings	
	PD 6705-2:2020	Structural use of steel and aluminium. Execution of steel bridges conforming to BS EN 1090-2. Guide	Replaces PD 6705-2:2010 + A1:2013
	PD 6705-3:2009	Recommendations on the execution of aluminium structures to BS EN 1090-3	

Used (✓)	Execution Standards referenced in British Standards or Eurocodes		
	Execution Standard reference	**Title**	**Notes**
	BS EN 1090-1:2009+A1:2011	Execution of steel structures and aluminium structures - Part 1: Requirements for conformity assessment of structural components	
	BS EN 1090-2:2018+A1:2024	Execution of steel structures and aluminium structures. Technical requirements for the execution of steel structures	Supersedes BS EN 1090-2:2018
	BS EN 1090-3:2019	Execution of steel structures and aluminium structures – Part 3: Technical requirements for aluminium structures	Supersedes BS EN 1090-3:2008
✓	BS EN 13670:2009 Incorporating corrigenda October 2015 and November 2015	Execution of concrete structures	

Used (✓)	Product Standards referenced in British Standards or Eurocodes		
	Product Standard reference	**Title**	**Notes**
✓	BS EN 206:2013+A2:2021	Concrete – Specification, performance, production and conformity	Supersedes BS EN 206:2013+A1:2016
	BS EN 1317-1:2010	Road Restraint Systems – Part 1 – Terminology and general criteria for test methods	
	BS EN 1317-2:2010	Road Restraint Systems – Part 2 – Performance classes, impact test acceptance criteria and test methods for safety barriers.	
	BS EN 1317-3:2010	Road Restraint Systems – Part 3 – Performance classes, impact test acceptance criteria and test methods for crash cushions.	
	DD ENV 1317-4:2002	Road Restraint Systems – Part 4 – Performance classes, impact test acceptance criteria and test methods for terminals and transitions of safety barriers.	***Draft BS EN 1317-4 for public comment published in June 2012***
	BS EN 1317-5:2007+A2:2012	Road Restraint Systems – Part 5 - Product requirements and evaluation of conformity for vehicle restraint systems	Incorporating corrigendum August 2012 ***Draft prEN 1317-5 for public comment published in December 2013***
	PD CEN/TR 16949:2016	Road Restraint System – Pedestrian restraint system - Pedestrian parapets	***Bsi Published Document / CEN Technical Report published in July 2016*** ***(This document should not be used. The requirements of BS 7818:1995 apply.)***
	PD CEN/TS 1317 7:2023	Road restraint systems - Part 7: Performance characterisation and test methods for terminals of safety barriers	***Replaces Draft prEN 1317-7*** ***(All terminals should be in accordance with this document or ENV1317-4.)***

Used (✓)	Product Standards referenced in British Standards or Eurocodes		
	Product Standard reference	**Title**	**Notes**
	PD CEN/TS 17342:2019	Road restraint systems - Motorcycle road restraint systems which reduce the impact severity of motorcyclist collisions with safety barriers	***Replaces*** PD CEN/TS 1317-8:2012 ***(This document should not be used.)***
	PD CEN/TR 17081:2018	Design of fastenings for use in concrete – Plastic design of fastenings with headed and post-installed fasteners	
	BS EN 1337-1:2000	Structural bearings – Part 1: General Design Rules	
	BS EN 1337-2:2004	Structural bearings – Part 2: Sliding elements	
	BS EN 1337-3:2005	Structural bearings – Part 3: Elastomeric bearings	
	BS EN 1337-4:2004	Structural bearings – Part 4: Roller bearings	Corrigendum No.1 March 2007
	BS EN 1337-5:2005	Structural bearings – Part 5: Pot bearings	
	BS EN 1337-6:2004	Structural bearings – Part 6: Rocker bearings	
	BS EN 1337-7:2004	Structural bearings – Part 7: Spherical and cylindrical PTFE bearings	
	BS EN 1337-8:2007	Structural bearings – Part 8: Guide bearings and restraint bearings	
	BS EN 1337-9:1998	Structural bearings – Part 9: Protection	
	BS EN 1337-10:2003	Structural bearings – Part 10: Inspection and maintenance	Corrigendum No.1 November 2003
	BS EN 1337-11:1998	Structural bearings – Part 11: Transport, Storage and Installation.	
	BS EN 10025-1:2004	Hot rolled products of structural steels Part 1: General technical delivery conditions.	
	BS EN 10025-2:2019	Hot rolled products of structural steels Part 2: Technical delivery conditions for non-alloy structural steels.	Supersedes BS EN 10025-1:2004
	BS EN 10025-3:2019	Hot rolled products of structural steels Part 3: Technical delivery conditions for normalized/normalized rolled weldable fine grain structural steels.	Supersedes BS EN 10025-3:2004

APPROVAL IN PRINCIPLE FOR DESIGN

Struc Ref: K61200A & B
Rev P43
0329/120/2025

Scheme title: Residential Development off Westgate, Cleckheaton
Structure title: Private Mass Concrete Retaining Walls

Used (✓)	Product Standards referenced in British Standards or Eurocodes		
	Product Standard reference	**Title**	**Notes**
	BS EN 10025-4:2019+A1:2022	Hot rolled products of structural steels Part 4: Technical delivery conditions for thermomechanical rolled weldable fine grain structural steels.	Supersedes BS EN 10025-4:2019
	BS EN 10025-5:2019	Hot rolled products of structural steels – Part 5: Technical delivery conditions for structural steels with improved atmospheric corrosion resistance	Supersedes BS EN 10025-5:2004
	BS EN 10025-6:2019+A1:2022	Hot rolled products of structural steels – Part 6: Technical delivery conditions for flat products of high yield strength structural steels in the quenched and tempered condition.	Supersedes BS EN 10025-6:2019
	BS EN 10080:2005	Steel for the reinforcement of concrete – Weldable reinforcing steel - General	
	BS EN 10210-1:2006	Hot finished structural hollow sections of non-alloy and fine grain steels – Part 1: Technical delivery conditions	
	BS EN 10210-2:2019	Hot finished structural hollow sections – Part 2: Tolerances, dimensions and sectional properties	Supersedes BS EN 10210-2:2006
	BS EN 10248-1:2023	Hot rolled sheet piling of non alloy steels. Technical delivery conditions	Supersedes BS EN 10248-1:1996
	BS EN 10248-2:2024	Hot rolled sheet piling of non alloy steels. Tolerances on shape and dimensions	Supersedes BS EN 10248-2:1996
	BS EN 12063:2024	Execution of special geotechnical work. Sheet pile walls.	Supersedes BS EN 12063:1999
	BS EN 13369:2023	Common rules for precast concrete products	Supersedes BS EN 13369:2018
	BS EN 14388:2005	Road traffic noise reducing devices	There is a 2015 version, however the 2015 version is not harmonised.
	BS EN 15050:2007 + A1:2012	Precast concrete products – Bridge elements	See CD 350 clause 3.8.1 for additional guidance.

Used (✓)	Product Standards referenced in British Standards or Eurocodes		
	Product Standard reference	**Title**	**Notes**
	BS EN 15258:2008	Precast concrete products - Retaining wall elements	

Used (✓)	British Standards		
	British Standard reference	**Title**	**Notes**
✓	BS 4449:2005+A3:2016	Steel for the reinforcement of concrete	No longer covers plain round bar. (See BS4482 up to 12mm dia, see BS EN 10025-1 for larger sizes and dowels. See BS EN 13877-3 for dowel bars in concrete pavements.)
	BS 5896:2012	Specification for high tensile steel wire and strand for the prestressing of concrete	
	BS 7818:1995	Specification for pedestrian restraint systems in metal	Incorporating Corrigendum No.1 May 2004 and Corrigendum No.2 September 2006 Currently the requirements of BS 7818:1995 are to be used instead of PD CEN/TR 16949:2016
✓	BS 8002:2015	Code of practice for earth retaining structures	
✓	BS 8004:2015 +A1 2020	Code of practice for foundations	Amendment +A1:2020
✓	BS 8006-1:2010+A1:2016	Code of practice for strengthened/reinforced soils and other fills	
✓	BS 8500-1:2023	Concrete – Complementary British Standard to BS EN 206: Method of specifying and guidance for the specifier.	Supersedes BS 8500-1:2015+A2:2019

APPROVAL IN PRINCIPLE FOR DESIGN

Struc Ref: K61200A & B
Rev P43
0329/120/2025

Scheme title: Residential Development off Westgate, Cleckheaton
Structure title: Private Mass Concrete Retaining Walls

Used (✓)	British Standards		
✓	BS 8500-2:2023	Concrete – Complementary British Standard to BS EN 206: Specification for constituent materials and concrete.	Supersedes BS 8500-2:2015+A2:2019
✓	BS 8666:2020	Scheduling, dimensioning, bending and cutting of steel reinforcement for concrete	Supersedes BS 8666:2005

Used (✓)	The Manual Contract Document for Highway Works (MCHW)		
	MCHW reference	**Title**	**Notes**
✓	MCHW Volume 1: October 2022	Specification for Highway Works	***Specification compliant with the execution standards must be used. A Departure is necessary for the parts where a compliant revision has not been published.*** ***Amendments October 2022*** ***Supersedes April 2022 version***
✓	MCHW Volume 2: October 2022	Notes for guidance on the Specification for Highway Works	***Notes for guidance compliant with the execution standards must be used. A Departure is necessary for the parts where a compliant revision has not been published.*** ***Amendments October 2022*** ***Supersedes November 2021 version***
✓	MCHW Volume 3: February 2017	Highway Construction Details	

Used (✓)	The Design Manual for Roads and Bridges (DMRB)		
	DMRB reference	**Title**	**Notes**
	GG 101 Revision 0.1.0	Introduction to the Design Manual for Roads and Bridges	Replaces GG 101 Revision 0
	GG 102 Revision 0	Quality Management Systems for Highway Design	Replaces GD 02/16
	GG 103 Revision 0	Introduction and general requirements for sustainable development and design	
	GG 104 Revision 0.1.0	Requirements for Safety Risk Assessment	Replaces GG 104 Revision 0
✓	GG 184 Revision 0	Specification for the use of Computer Aided Design	Replaces IAN 184/16
✓	CG 300 Revision 0.2.0	Technical approval of highway structures	Supersedes CG 300 Revision 0.1.0
	CG 302 Revision 0	As-built, operational and maintenance records for highway structures	Supersedes BD 62/07

Used (✓)	The Design Manual for Roads and Bridges (DMRB)		
	DMRB reference	**Title**	**Notes**
	CG 303 Revision 0	Quality assurance scheme for paints and similar protective coatings	Supersedes BD 35/14
	CG 305 Revision 0	Identification marking of highway structures	Supersedes BD 45/93
	CG 501 Revision 2	Design of highway drainage systems	Supersedes HD 33/16, TA 80/99
	CD 127 Revision 1.0.1	Cross-sections and headrooms	Replaces TD 27/05 and TD 70/08
✓	CD 350 Revision 0	The design of highway structures	Supersedes BD 100/16, BA 57/01, BD 57/01 and IAN 124/11
	CD 351 Revision 0	The design and appearance of highway structures	Supersedes BA 41/98
	CD 352 Revision 0.0.1	Design of road tunnels	Supersedes CD 352 Revision 0
	CD 353 Revision 0	Design criteria for footbridges	Supersedes BD 29/17
	CD 354 Revision 1.1.0	Design of minor structures	Supersedes CD 354 Revision 1
	CD 355 Revision 0	Application of whole-life costs for design and maintenance of highway structures	Replaces BD 36/92 and BA 28/92
	CD 356 Revision 1	Design of highway structures for hydraulic action	Supersedes BA 59/94
	CD 357 Revision 1	Bridge expansion joints	Replaces BD 33/94, BA 26/94, IAN 168/12 and IAN 169/12
	CD 358 Revision 2.4.0	Waterproofing and surfacing of concrete bridge decks	Supersedes CD 358 Revision 2.3.0
	CD 359 Revision 0	Design requirements for permanent soffit formwork	Supersedes BA 36/90 and IAN 131/11
	CD 360 Revision 2	Use of compressive membrane action in bridge decks	Supersedes BD 81/02
	CD 361 Revision 0	Weathering steel for highway structures	Supersedes BD 7/01
	CD 362 Revision 1	Enclosure of bridges	Replaces BD 67/96 and BA 67/96
	CD 363 Revision 0	Design rules for aerodynamic effects on bridges	Replaces BD 49/01
	CD 364 Revision 0	Formation of continuity joints in bridge decks	Replaces BA 82/00
	CD 365 Revision 1	Portal and cantilever signs/signals gantries	Replaces BD 51/14, IAN 193/16, BE 7/04
	CD 366 Revision 0	Design criteria for collision protection beams	Replaces BD 65/14
	CD 367 Revision 0	Treatment of existing structures on highways widening schemes	Replaces BD 95/07
	CD 368 Revision 0	Design of fibre reinforced polymer bridges and highway structures	Replaces BD 90/05
	CD 369 Revision 0	Surface protection for concrete highway structures	Replaces BA 85/04

APPROVAL IN PRINCIPLE FOR DESIGN

Struc Ref: K61200A & B
Rev P~~43~~
03~~29~~/12~~0~~/2025

Scheme title: Residential Development off Westgate, Cleckheaton
Structure title: Private Mass Concrete Retaining Walls

Used (✓)	The Design Manual for Roads and Bridges (DMRB)		
	DMRB reference	**Title**	**Notes**
	CD 371 Revision 0	Strengthening highway structures using fibre-reinforced polymers and externally bonded steel plates	Replaces BD 85/08, BD 84/02
	CD 372 Revision 0	Design of post-installed anchors and reinforcing bar connections in concrete	Supersedes IAN 104/15
	CD 373 Revision 0	Impregnation of reinforced and prestressed concrete highway structures using hydrophobic pore-lining impregnants	Supersedes BD 43/03
	CD 374 Revision 0	The use of recycled aggregates in structural concrete	Supersedes BA 92/07
	CD 375 Revision 1	Design of corrugated steel buried structures	Supersedes BD 12/01
	CD 376 Revision 0	Unreinforced masonry arch bridges	Replaces BD 91/04
	CD 377 Revision 4	Requirements for road restraint systems	Supersedes TD 19/06
	CD 622 Revision 1	Managing geotechnical risk	Replaces HD 22/08, BD 10/97 and HA 120/08
	CS 461 Revision 0	Assessment and upgrading of in-service parapets	Supersedes BA 37/92 and IAN 97/07
	CS 462 Revision 0	Repair and management of deteriorated concrete highway structures	Supersedes BA 35/90 and BA 52/94
	GD 304 Revision 2	Designing health and safety into maintenance	Replaces IAN 69/15
	LA 104 Revision 1	Environmental assessment and monitoring	Supersedes HA 205/08, HD 48/08, IAN 125/15, and IAN 133/10
	LA 106 Revision 1	Cultural heritage assessment	Supersedes HA 208/07, HA 60/92, HA 75/01
	LA 110 Revision 0	Material assets and waste	Supersedes IAN 153/11
	LA 113 Revision 1	Road drainage and the water environment	Supersedes HD 45/09
	LD 119 Revision 0	Roadside environmental mitigation and enhancement	Formerly LA 119, which superseded HA 65/94 and HA 66/95

	Interim Advice Notes		
	IAN reference	**Title**	**Notes**
	~~IAN 105/08~~	~~Implementation of construction (design and management) 2007 and the withdrawal of SD 10 and SD 11~~	This document has been withdrawn without replacement.

Used (✓)	Miscellaneous		
	Standard reference	**Title**	**Notes**
	CIRIA C543	Bridge Detailing Guide	
	CIRIA C686	Safe Access for Maintenance and Repair	
	CIRIA C760	Guidance on embedded retaining wall design	
	CIRIA C766	Control of cracking caused by restrained deformation in concrete	Supersedes C660
	CIRIA C777	General fixings – guidance on selection and whole-life management	
	Department for Transport - Design & Maintenance Guidance for Local Authority Roads	Provision of Road Restraint Systems on Local Authority Road	Published October 2011

Used (✓)	Miscellaneous		
	Standard reference	**Title**	**Notes**
	Department for Transport	Guidance on the Design, Assessment and Strengthening of Masonry Parapets on Highway Structures	Published 2012

Additional Standards **Additional standards needed for a particular design should be listed here.**		
Reference	**Title**	**Notes**
BS1722-5:2006+A1:2018	Fences:Specification for close boarded fences and wooden palisade fences	

APPENDIX B

DRAWINGS

CASCADE Westgate, Cleckheaton | Retaining Wall Heights from Formation

This drawing must be read in conjunction with all other relevant drawings and information. The drawing or information must not be used for construction unless expressly issued for construction. Use displayed dimensions & verify dimensions on site before commencing any work with any discrepancies reported to **Strata** immediately.

DO NOT SCALE OFF DRAWINGS.

Rev	Date	Description	By	Checked
A	17/10/2025	RW height to formation adjacent Plot 180 amended to suit drawing QD1776-14-11. Boundary line to rear of Plot 30 amended to suit site fence line	NE	TECH

NOTE: There are no proposed or existing burr walls across the development site, i.e. no walls are subject to existing or proposed highway loading

DRAWING KEY :

- Existing adopted highway extent
- Proposed adoptable highway extent (through Section 38 Agreement)
- Proposed Masonry Retaining Wall (with fence) adjacent to the existing / proposed adoptable highway. See drawing QD1776-14-11 & 12 referenced
- Proposed Masonry Retaining Wall adjacent to the existing / proposed adoptable highway. See drawing QD1776-14-11 & 12 referenced
- Proposed Gillcon Retaining Wall adjacent to the existing / proposed adoptable highway - refer to Lock+Load drawings referenced
- Proposed Retaining Wall NOT adjacent to the existing / proposed adoptable highway
- Proposed Gillcon Retaining Wall NOT adjacent to the existing / proposed adoptable highway - refer to Lock+Load drawings referenced
- X.XXm — Proposed Retained Height (measured from formation level). Please note this only applies where the wall is adjacent to highway. Where not adjacent to highway, heights noted as per Queensberry Design's External Works referenced

Drawing References:

- Site Layout by Strata Homes dated 18.02.2025, ref: BY00099-STH-B01-XX-DR-A-SL001 Rev T
- External Works Sheet 1 by Queensberry Design dated 17.02.2022, ref: QD1776-04-01 Rev I
- External Works Sheet 2 by Queensberry Design dated 17.02.2022, ref: QD1776-04-02 Rev J
- Lock+Load Elevations 01 & 02 by Geoman dated 11.09.2024, ref SK24-5558-F1-01 Rev 0.
- Lock+Load Elevations 01 & 02 by Geoman dated 11.09.2024, ref SK24-5558-F1-02 Rev 0.
- Lock+Load Cross-Sections by Geoman dated 11.09.2024, ref SK24-5558-F1-03 Rev 0.
- Lock+Load Wall 03 Elevation by Geoman dated 27.09.2024, ref SK24-5558-F1-04 Rev D.
- Lock+Load Wall 03 Cross-Sections by Geoman dated 27.09.2024, ref SK24-5558-F1-05 Rev D.
- Section 38 Layout by Queensberry Design, ref: QD1776-16-01 Rev E
- Masonry & Gillcon Retaining Wall Location Plans by Queensberry Design, ref: QD1776-14-10 Rev A
- Mass Concrete Retaining Wall Sections by Queensberry Design, ref: QD1776-14-11 Rev A & 12 Rev A

strata

scale: 1:500 @ A1 drawn by: NE date: 26/03/2025

Project: CASCADE Westgate, Cleckheaton

Drawing name: Retaining Wall Heights from Formation Revision: A

Drawing number: BY00099-STH-B01-XX-DR-S-1003

Planning ref: -

Drawing status: For Approval

strata homes ltd | quay point | lakeside
doncaster | DN4 5PL
E : www.strata.co.uk
T : 01302 308508
discover our social media

Westgate, Cleckheaton | AIP Walls Land Drain

This drawing must be read in conjunction with all other relevant drawings and information. The drawing or information must not be used for construction unless expressly issued for construction. Use displayed dimensions & verify dimensions on site before commencing any work with any discrepancies reported to **Strata** immediately.

DO NOT SCALE OFF DRAWINGS.

Rev	Date	Description	By	Checked
A	09/12/2025	Outfall from SD20 referenced. Note added to Gillcon wall stating designed with hydrostatic pressure. Layout for rear of Gillcon wall adj. Plot 1 added	TECH	TECH

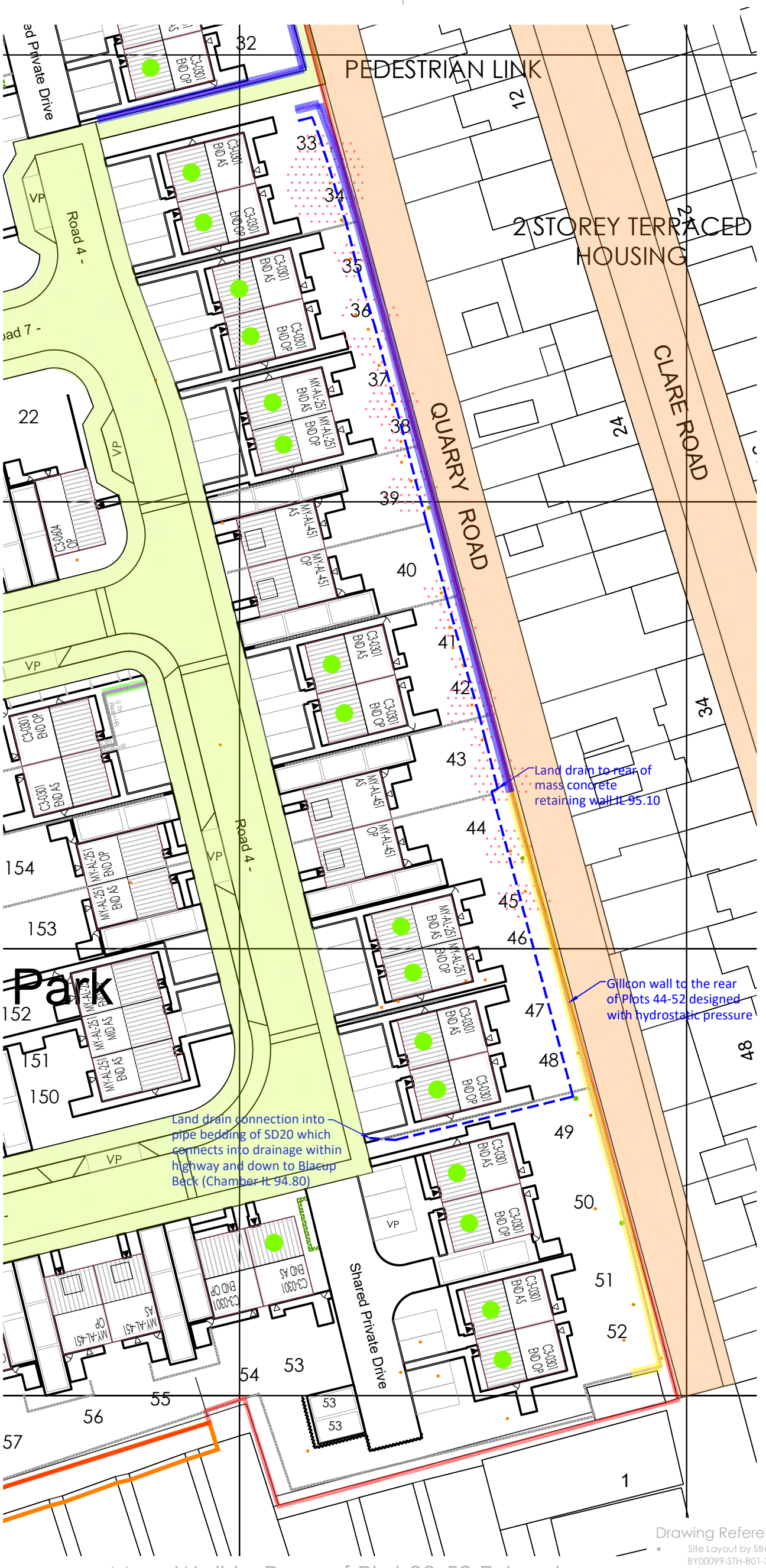

Mass Wall to Rear of Plot 33-52 Extract

Scale 1:500

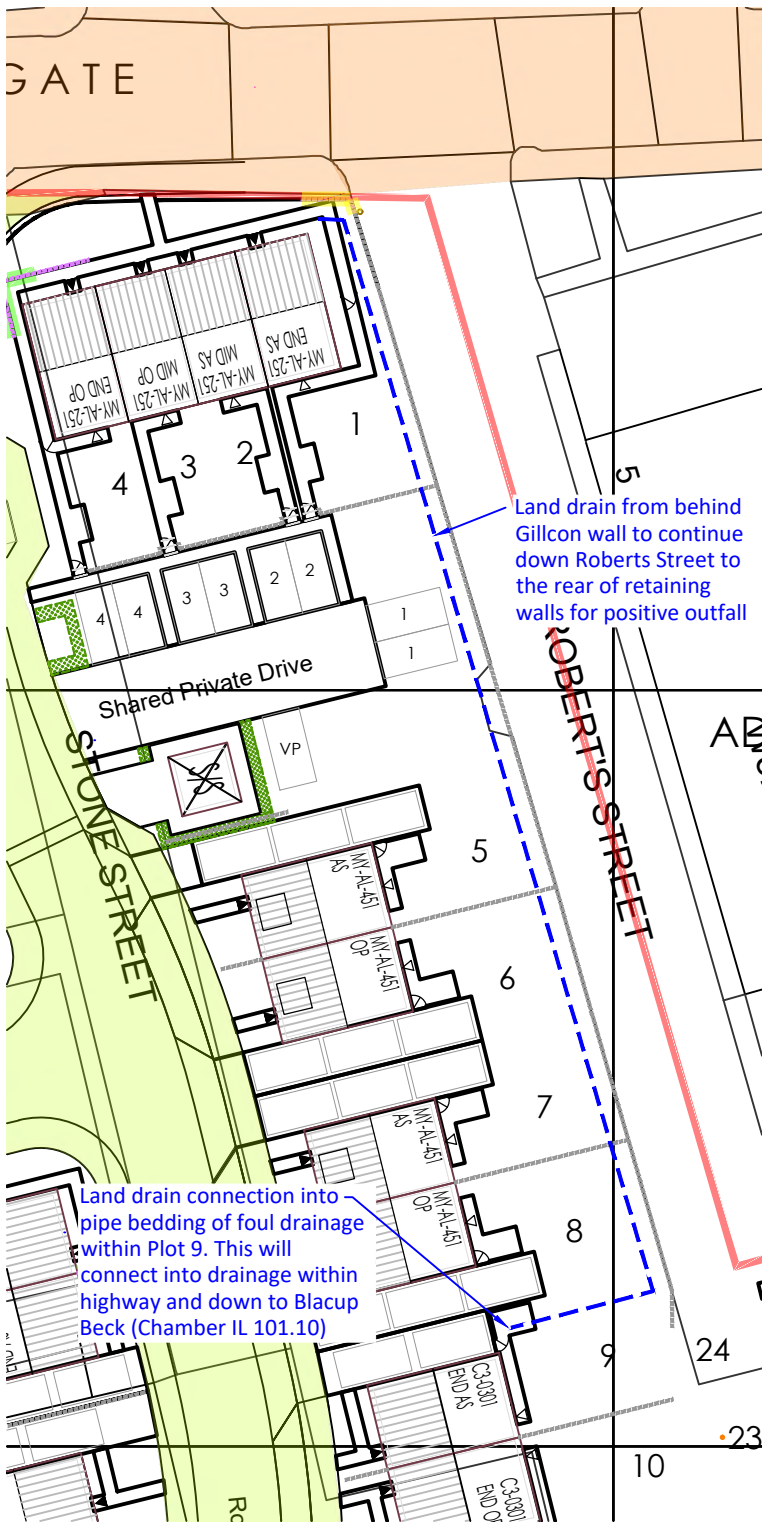

Gillcon Wall Adjacent Plot 1 Extract

Scale 1:500

DRAWING KEY :

- Existing adopted highway extent
- Proposed adoptable highway extent (through Section 38 Agreement)
- Proposed Masonry Retaining Wall (with fence) adjacent to the existing / proposed adoptable highway. See drawing QD1776-14-11 & 12 referenced
- Proposed Gillcon Retaining Wall adjacent to the existing / proposed adoptable highway - refer to Lock+Load drawings referenced
- Proposed 150mm perforated pipe to rear of retaining walls

Drawing References:

- Site Layout by Strata Homes dated 18.02.2025, ref: BY00099-STH-B01-XX-DR-A-SL001 Rev T
- External Works Sheet 1 by Queensberry Design dated 17.02.2022, ref: QD1776-04-01 Rev K
- External Works Sheet 2 by Queensberry Design dated 17.02.2022, ref: QD1776-04-02 Rev L
- Lock+Load Wall 03 Elevation by Geoman dated 27.09.2024, ref SK24-5558-F1-04 Rev D.
- Lock+Load Wall 03 Cross-Sections by Geoman dated 27.09.2024, ref SK24-5558-F1-05 Rev D.
- Section 38 Layout by Queensberry Design, ref: QD1776-16-01 Rev E
- Masonry & Gillcon Retaining Wall Location Plans by Queensberry Design, ref: QD1776-14-10 Rev B
- Mass Concrete Retaining Wall Sections by Queensberry Design, ref: QD1776-14-11 Rev B & 12 Rev A

1:500

10m 0 10m 20m 30m 40m 50m

strata

scale: 1:500 @ A3 drawn by: TECH date: 29/10/2025

Project: Westgate, Cleckheaton

Drawing name: AIP Walls Land Drain Revision: A

Drawing number: BY00099-STH-B01-DR-S-1007

Planning ref: -

Drawing status: For Approval

strata homes ltd | quay point | lakeside doncaster | DN4 5PL
E : www.strata.co.uk
T : 01302 308508
discover our social media

Only PDF/ DWF Issues of this drawing are controlled. All other formats (eg. DWG AutoCAD FILES) are UN-controlled and are used at your own risk.

Notes:–

1. THIS DRAWING IS TO BE READ IN CONJUNCTION WITH ALL OTHER RELEVANT ARCHITECTS ENGINEERS, MECHANICAL AND ELECTRICAL ENGINEERS DRAWINGS TOGETHER WITH THE SPECIFICATIONS.
2. DIMENSIONS TAKEN FROM PROPOSED LAYOUT.

MASONRY RETAINING WALLS.

GILCON RETAINING WALLS.

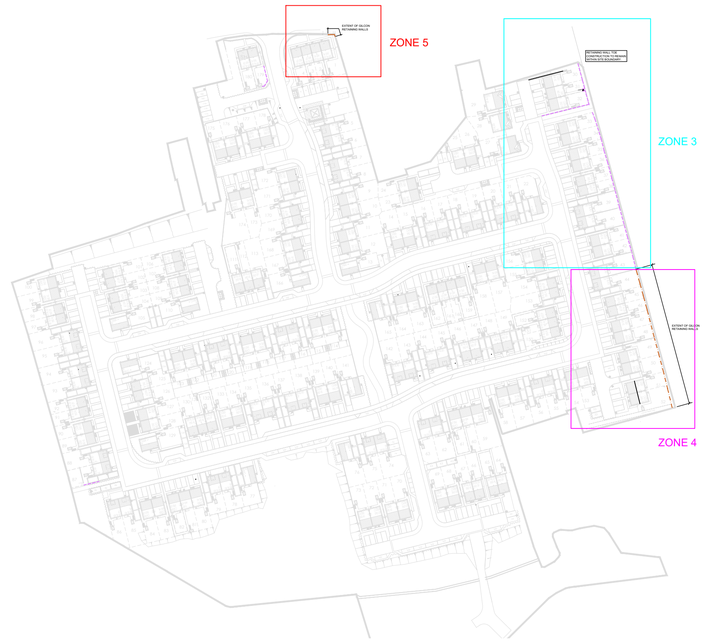

OVERALL ZONAL PLAN

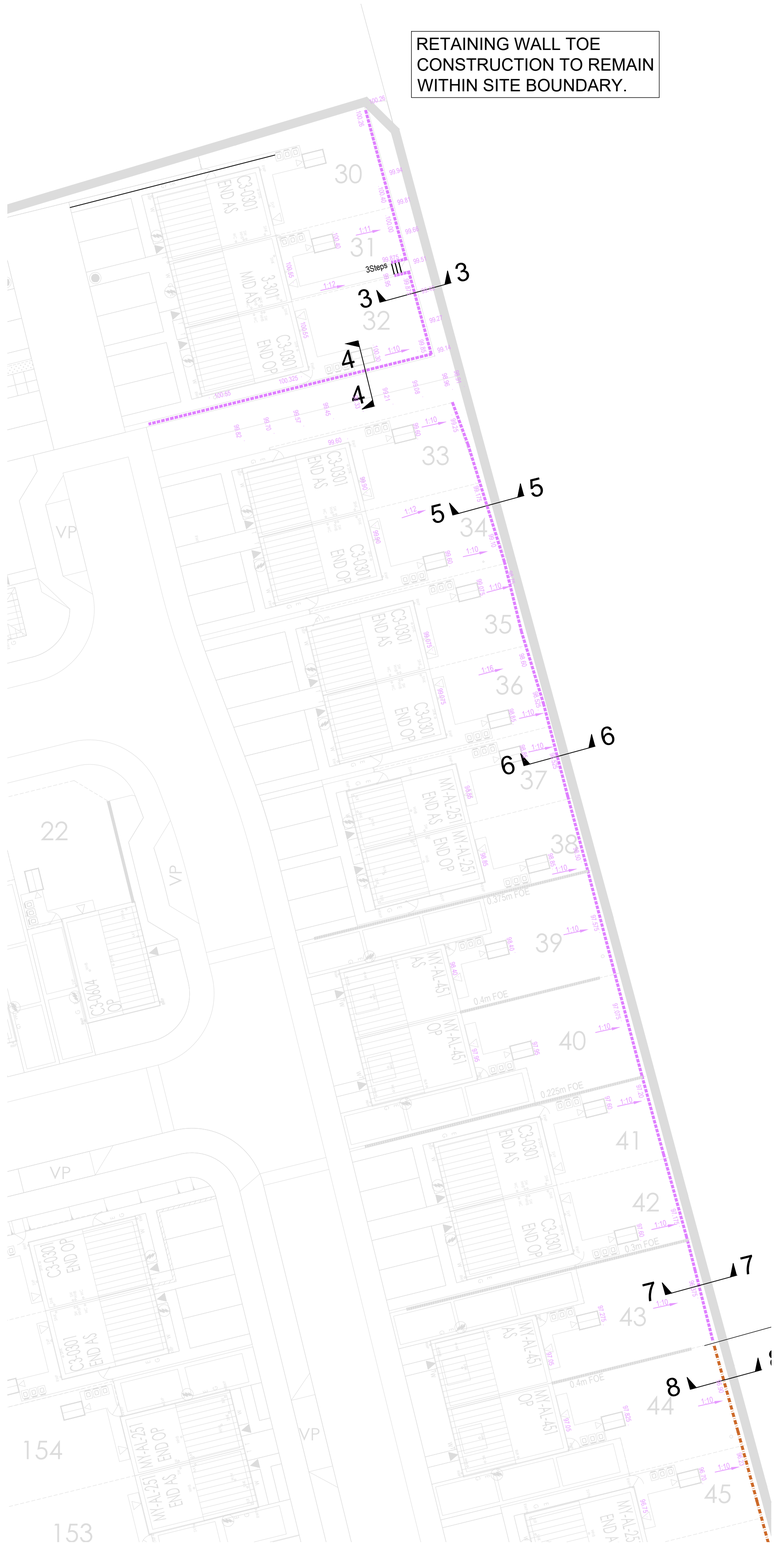

ZONE 3 - PLAN VIEW

SCALE - 1:50

ZONE 4 - PLAN VIEW

SCALE - 1:50

ZONE 5 - PLAN VIEW

SCALE - 1:50

Rev.	Date	Revision Details	Drawn	Checked
C	23.11.25	RETAINED HEIGHTS REMOVED	DZ	DJP
B	29.10.25	ZONES 1 & 2 OMITTED, ZONE 5 ADDED	DZ	DJP
A	26.08.25	DRAWINGS UPDATED	DZ	DJP
-	12.06.25	INITIAL ISSUE	DZ	DJP

© This drawing is the property of Queensberry Design Limited and the information can only be reproduced with their prior permission.

QUEENSBERRY DESIGN
CIVIL, STRUCTURAL, ARCHITECTURAL & GEOTECHNICAL CONSULTANTS
NORTH EAST OFFICE
5 STAITHES, THE WATERMARK, GATESHEAD, TYNE AND WEAR NE11 9ZN
T: 0191 460 9090
YORKSHIRE OFFICE
SUITE 12A, BROOKFIELD COURT, SELBY ROAD, LEEDS, LS25 1NB
T: 0113 517 7099
www.queensberrydesign.co.uk

Client: STRATA

Project: WESTGATE CLECKHEATON

Title: MASONRY & GILLCON RETAINING WALL LOCATION PLANS

Drawn	Checked	Date
DR	DJP	12/06/2025

Drawing Number: QD1776-14-10

Drawing Status	Scale	Rev.
INITIAL ISSUE	1:500 - A1	C

Only PDF/ DWF Issues of this drawing are controlled. All other formats (eg. DWG AutoCAD FILES) are UN-controlled and are used at your own risk.

Notes:–

1. THIS DRAWING IS TO BE READ IN CONJUNCTION WITH ALL OTHER RELEVANT ARCHITECTS ENGINEERS, MECHANICAL AND ELECTRICAL ENGINEERS DRAWINGS TOGETHER WITH THE SPECIFICATIONS.
2. DIMENSIONS TAKEN FROM PROPOSED LAYOUT.
3. FOR SECTION DETAILS, REFER TO TYPICAL MASONRY DETAIL RETAINING WALL ON DRAWING – QD1776–14–12

Table 3.11, AIP

ITEM	MATERIAL	FINISH/LOCATION
Concrete Foundation	Grade RC32/40 XD3	
Brickwork	Class F2, S2 conforming to BS EN 771-1	Finish as manufacturers specification, tied to blockwork using type 2 stainless steel wall ties @ 450mm horizontal and vertical centres.
Blockwork	conforming to BS EN 771-3	Retaining wall construction behind brickwork face
Reinforcement	Grade B500B conforming to BS 4449:2005	Foundation
Backfill material	Type 3 aggregate in compliance with specification for highway works, (SHW).	Backfill to structure.
Drainage to rear of Wall	100mmØ semi perforated twin wall drainage pipe laid to positive outlet. Drain to be surrounded with single size drainage stone, together with 64mm square pvc weepholes at 2m c/c, min 150mm above ground level.	Rear of Wall
Waterproofing	Bituminous paint in accordance with series 2000 of MCHW.	Rear of Wall

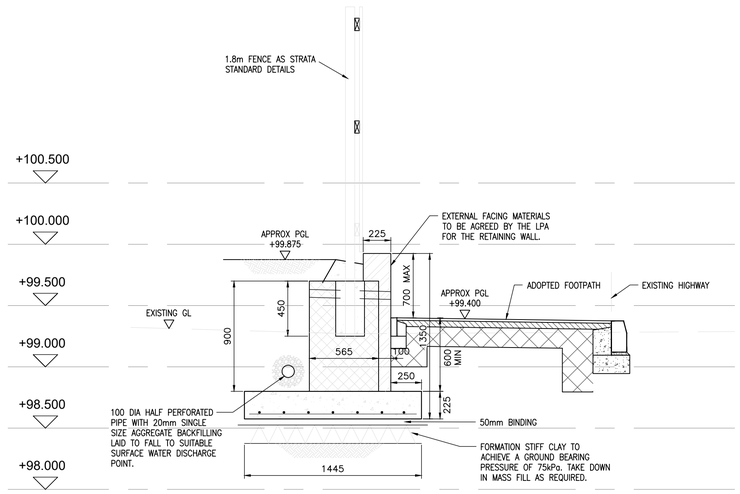

SECTION 3-3

Scale @ 1:25

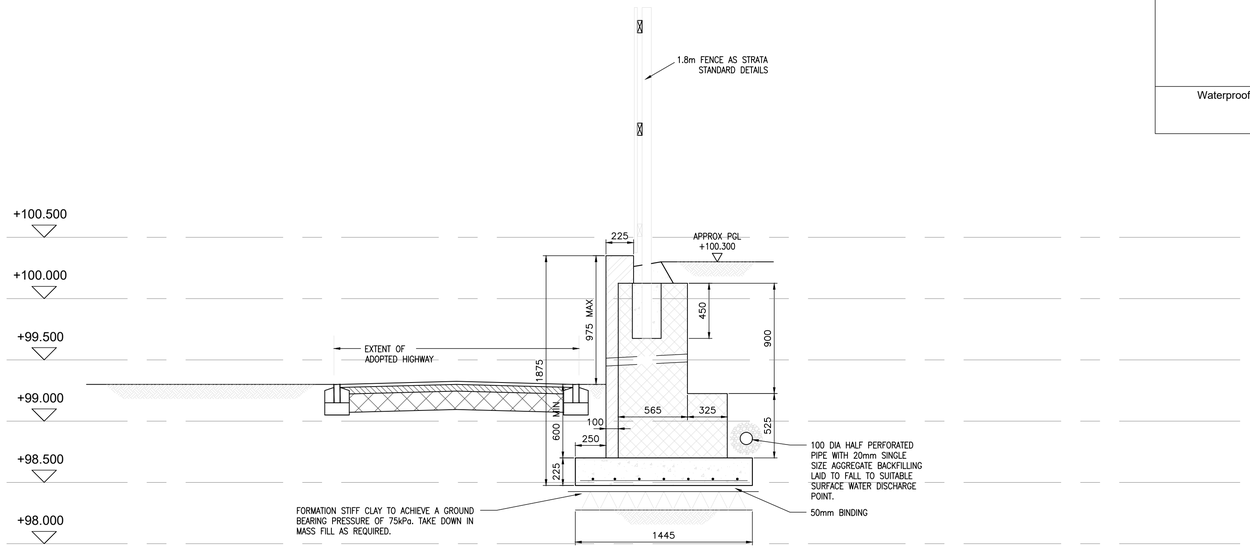

SECTION 4-4

Scale @ 1:25

Rev.	Date	Revision Details	Drawn	Checked
C	23.11.25	SECTION 4 AMENDED AS KIRKLEES REQUEST	DZ	DJP
B	29.10.25	SECTIONS 1 & 2 OMITTED	DZ	DJP
A	26.08.25	DRAWINGS UPDATED	DZ	DJP
-	12.06.25	INITIAL ISSUE	DZ	DJP

© This drawing is the property of Queensberry Design Limited and the information can only be reproduced with their prior permission.

QUEENSBERRY DESIGN
CIVIL, STRUCTURAL, ARCHITECTURAL & GEOTECHNICAL CONSULTANTS
NORTH EAST OFFICE
5 STAITHES, THE WATERMARK, GATESHEAD, TYNE AND WEAR NE11 9SN
T: 0191 460 9090
YORKSHIRE OFFICE
SUITE 12A, BROOKFIELD COURT, SELBY ROAD, LEEDS, LS25 1NB
T: 0113 517 7099
www.queensberrydesign.co.uk

Client: STRATA

Project: WESTGATE CLECKHEATON

Title: MASS CONCRETE RETAINING WALL SECTIONS (SHEET 1 of 4)

Drawn	Checked	Date
DR	DJP	12/06/2025

Drawing Number: QD1776-14-11

Drawing Status	Scale	Rev.
INITIAL ISSUE	1:500 - A1	C

Only PDF/ DWF Issues of this drawing are controlled. All other formats (eg. DWG AutoCAD FILES) are UN-controlled and are used at your own risk.

Notes:–

1. THIS DRAWING IS TO BE READ IN CONJUNCTION WITH ALL OTHER RELEVANT ARCHITECTS ENGINEERS, MECHANICAL AND ELECTRICAL ENGINEERS DRAWINGS TOGETHER WITH THE SPECIFICATIONS.
2. DIMENSIONS TAKEN FROM PROPOSED LAYOUT.
3. FOR SECTION DETAILS, REFER TO TYPICAL MASONRY DETAIL RETAINING WALL ON DRAWING – QD1776–14–12

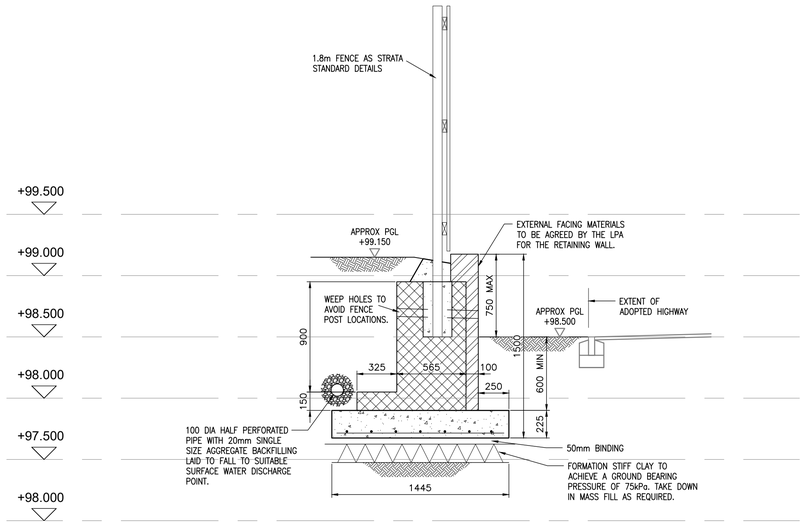

SECTION 5-5

Scale @ 1:25

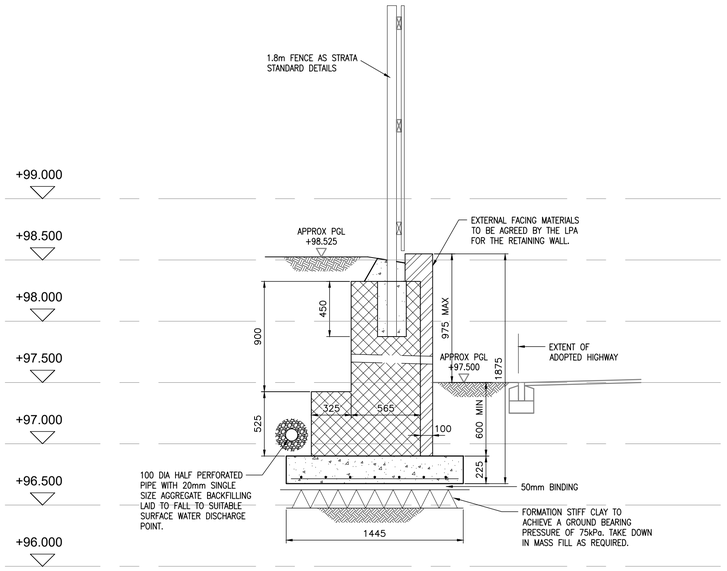

SECTION 6-6

Scale @ 1:25

Table 3.11, AIP		
ITEM	MATERIAL	FINISH/LOCATION
Concrete Foundation	Grade RC32/40 XD3	
Brickwork	Class F2, S2 conforming to BS EN 771-1	Finish as manufacturers specification, tied to blockwork using type 2 stainless steel wall ties @ 450mm horizontal and vertical centres.
Blockwork	conforming to BS EN 771-3	Retaining wall construction behind brickwork face
Reinforcement	Grade B500B conforming to BS 4449:2005	Foundation
Backfill material	Type 3 aggregate in compliance with specification for highway works, (SHW).	Backfill to structure.
Drainage to rear of Wall	100mmØ semi perforated twin wall drainage pipe laid to positive outlet. Drain to be surrounded with single size drainage stone, together with 64mm square pvc weepholes at 2m c/c, min 150mm above ground level.	Rear of Wall
Waterproofing	Bituminous paint in accordance with series 2000 of MCHW.	Rear of Wall

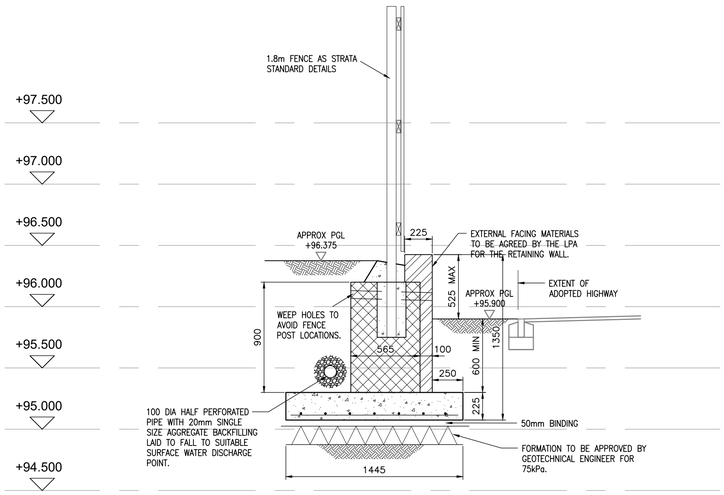

SECTION 7-7

Scale @ 1:25

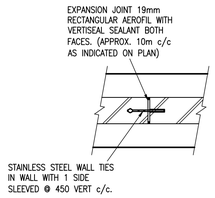

EXPANSION JOINT DETAIL (10m MAX)

Scale @ 1:20

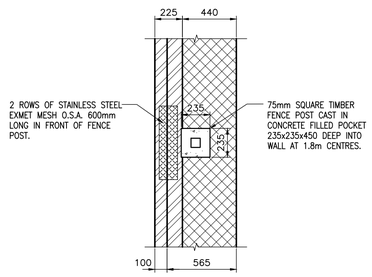

PLAN ON FENCE POST LOCATION POCKET

Scale @ 1:20

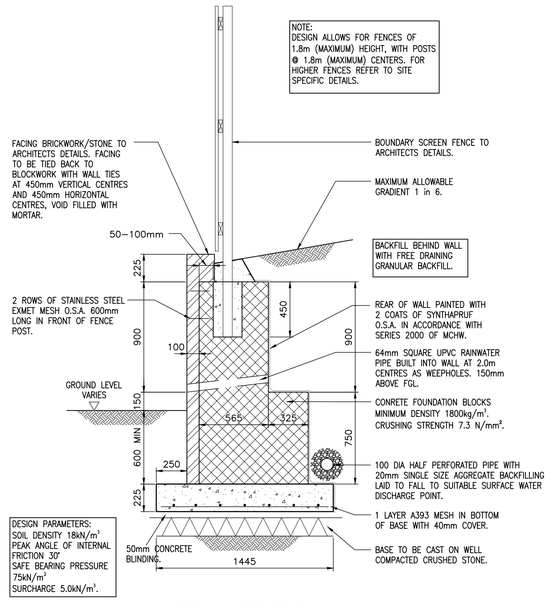

TYPICAL MASONRY DETAIL RETAINING WALL (2.0m MAX)

Scale @ 1:20

Rev.	Date	Revision Details	Drawn	Checked
A	26.08.25	DRAWINGS UPDATED	DZ	DJP
-	12.06.25	INITIAL ISSUE	DZ	DJP

© This drawing is the property of Queensberry Design Limited and the information can only be reproduced with their prior permission.

QUEENSBERRY DESIGN
CIVIL, STRUCTURAL, ARCHITECTURAL & GEOTECHNICAL CONSULTANTS
NORTH EAST OFFICE
5 STAITHES, THE WATERMARK, GATESHEAD, TYNE AND WEAR NE11 9SN
T: 0191 460 9090
YORKSHIRE OFFICE
SUITE 12A, BROOKFIELD COURT, SELBY ROAD, LEEDS, LS25 1NB
T: 0113 517 7099
www.queensberrydesign.co.uk

Client: STRATA

Project: WESTGATE CLECKHEATON

Title: MASS CONCRETE RETAINING WALL SECTIONS (SHEET 2 of 4)

Drawn	Checked	Date
DR	DJP	12/06/2025

Drawing Number: QD1776-14-12

Drawing Status	Scale	Rev.
INITIAL ISSUE	1:500 - A1	A

APPENDIX C

ADDITIONAL INFORMATION