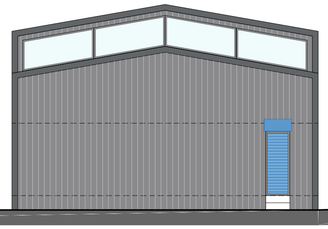

SIDE ELEVATION
1:100

FRONT ELEVATION
1:100

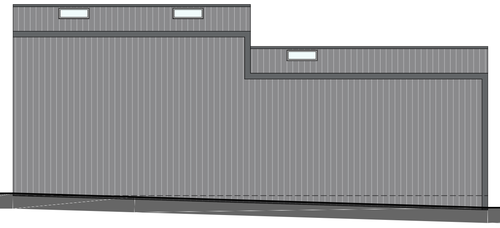

REAR ELEVATION
1:100

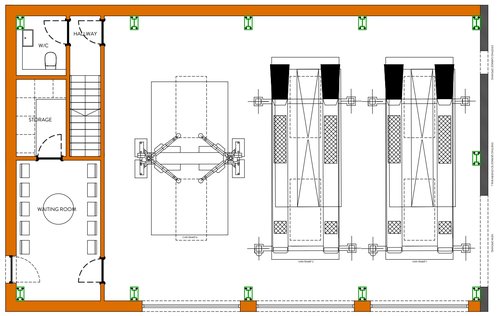

GROUND FLOOR PLAN
1:100

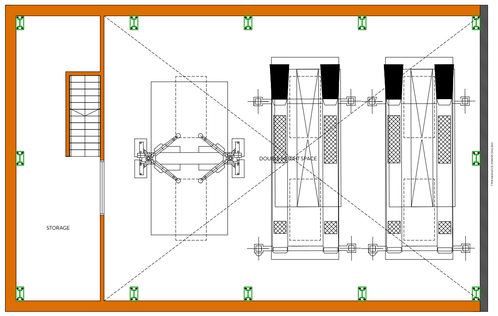

FIRST FLOOR PLAN
1:100

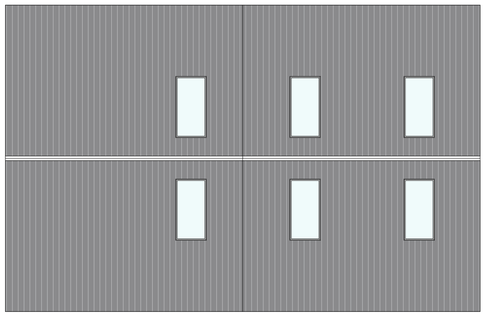

ROOF PLAN
1:100

2021 NORTHERN DESIGN AWARDS FINALIST

2022 Best of Houzz Service

BUILD 2021 Home Builder Awards

BUILD Architecture Awards 2019

REVISION	DESCRIPTION	DATE
-	-	-
-	-	-
-	-	-
-	-	-
-	-	-
-	-	-
-	-	-
-	-	-
-	-	-
-	-	-
-	-	-

NOTES

STATUS: PLANNING DRAWING

ORANGE DESIGN STUDIO.
ARCHITECTURAL PRACTICE

hello@orangedesignstudio.co.uk
59A, Huddersfield Road, Mirfield, WF14 8AA
orangedesignstudio.co.uk
01924 650930

COPYRIGHT © ORANGE DESIGN STUDIO LIMITED

PROJECT TITLE: NEWGATE GARAGE, MIRFIELD

DRAWING TITLE: PROPOSED GA

SCALE	DRAWN	CHECKED	PROJECT REFERENCE
1:50	EC	JH	ODS_21-499
PAPER SIZE	**DWG NUMBER**	**DATE**	**REVISION**
A1	(20)001	13/08/25	/

CLIENT: MOHAMED ADEEL