QUEENSGATE RETAIL PARK
QUEENSGATE
HUDDERSFIELD
HD1 2RD

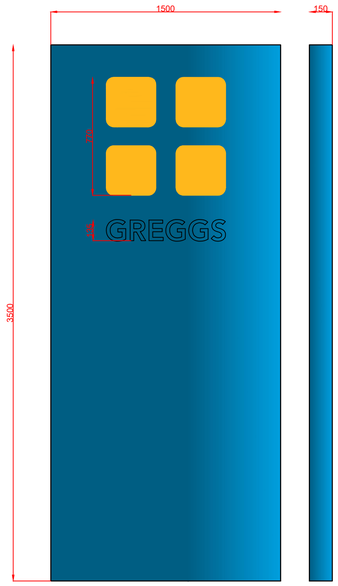

3.5M NON-ILLUMINATED TOTEM

MAIN PANEL STOVE ENAMELLED BLUE TO RAL 5019
WITH 60% HORIZONTAL GRADIENT TO PANTONE PROCESSED
CYAN. 'GREGGS' LETTERING IN FRET CUT OPAL PERSPEX.
QUATRO DOTS FRET CUT PERSPEX TO PANTONE 1235C.

PROPOSED TOTEM DETAIL (1:20)

0 200 400 600 800 1000mm
SCALE 1:20

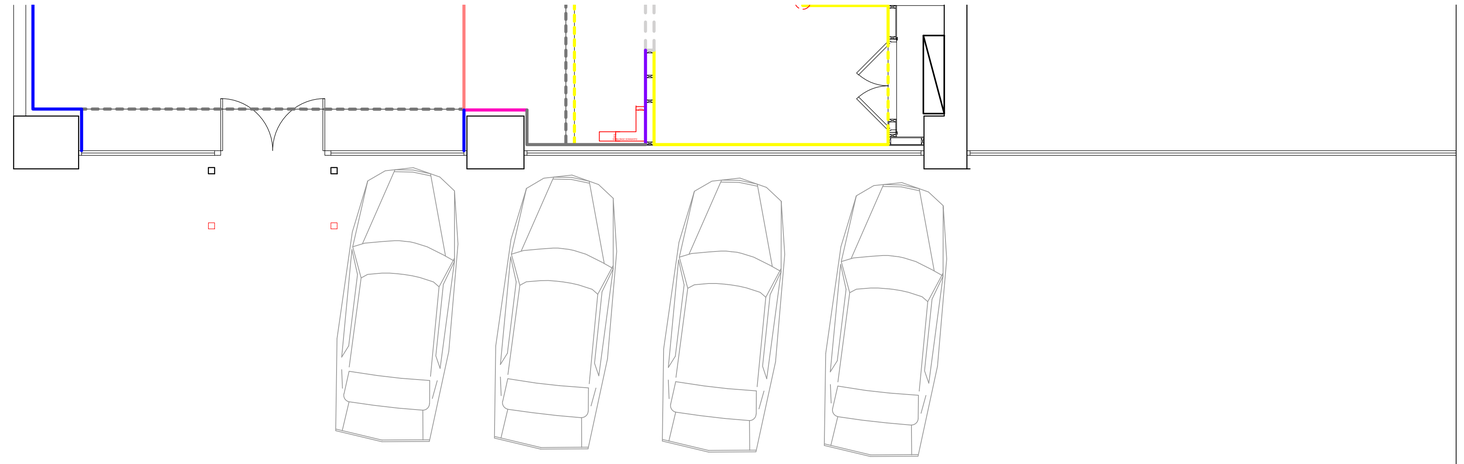

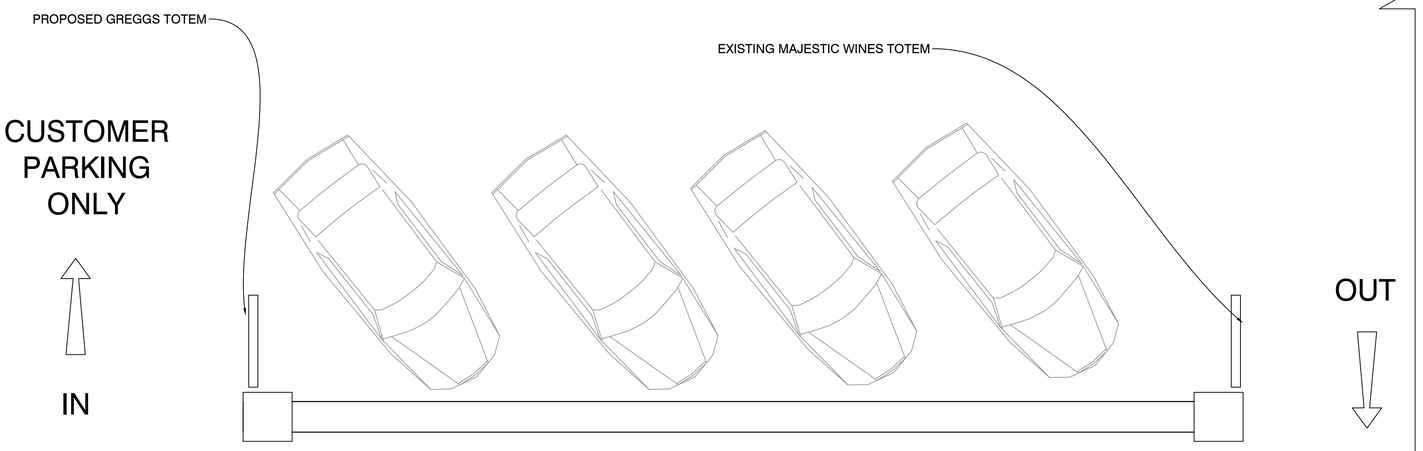

PROPOSED TOTEM POSITION (1:50)

0 500 1000 1500 2000 2500mm
SCALE 1:50

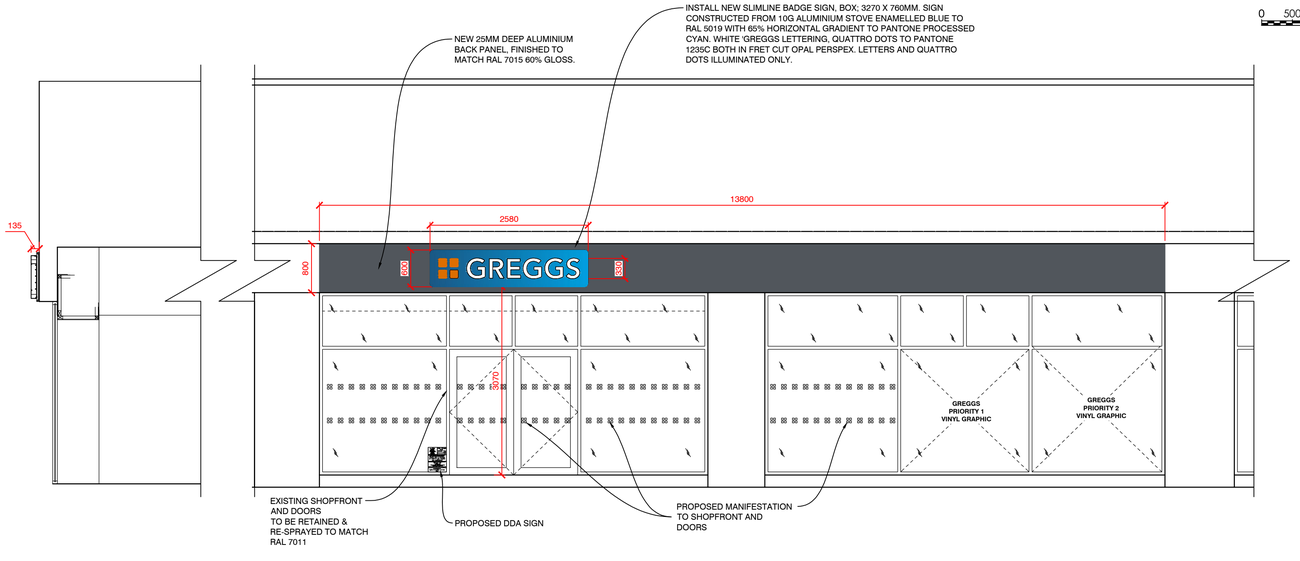

PROPOSED SHOPFRONT ELEVATION AND SECTION THROUGH (1:50)

0 500 1000 1500 2000 2500mm
SCALE 1:50

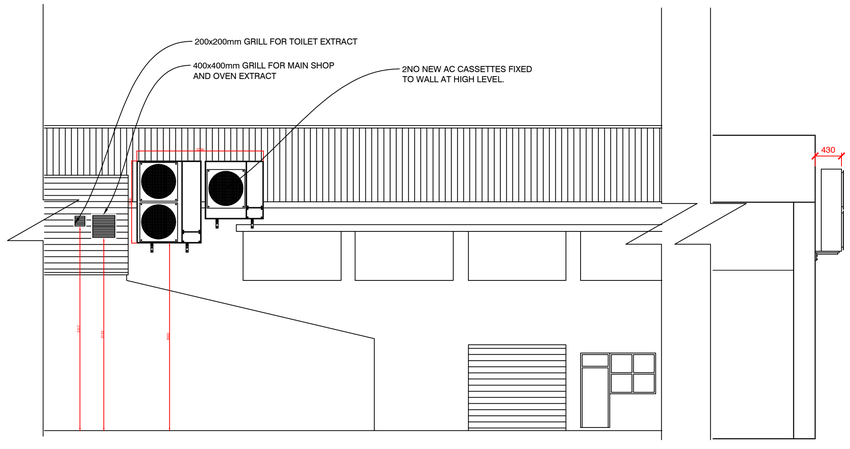

PROPOSED REAR ELEVATION AND SECTION THRU' (1:50)

0 500 1000 1500 2000 2500mm
SCALE 1:50