Project: Castle Hill, Huddersfield	Electric Charging		
Client: The Thandi Partnership	Drg No: 3287 (SK) 116	Rev: A	Date: February 2023

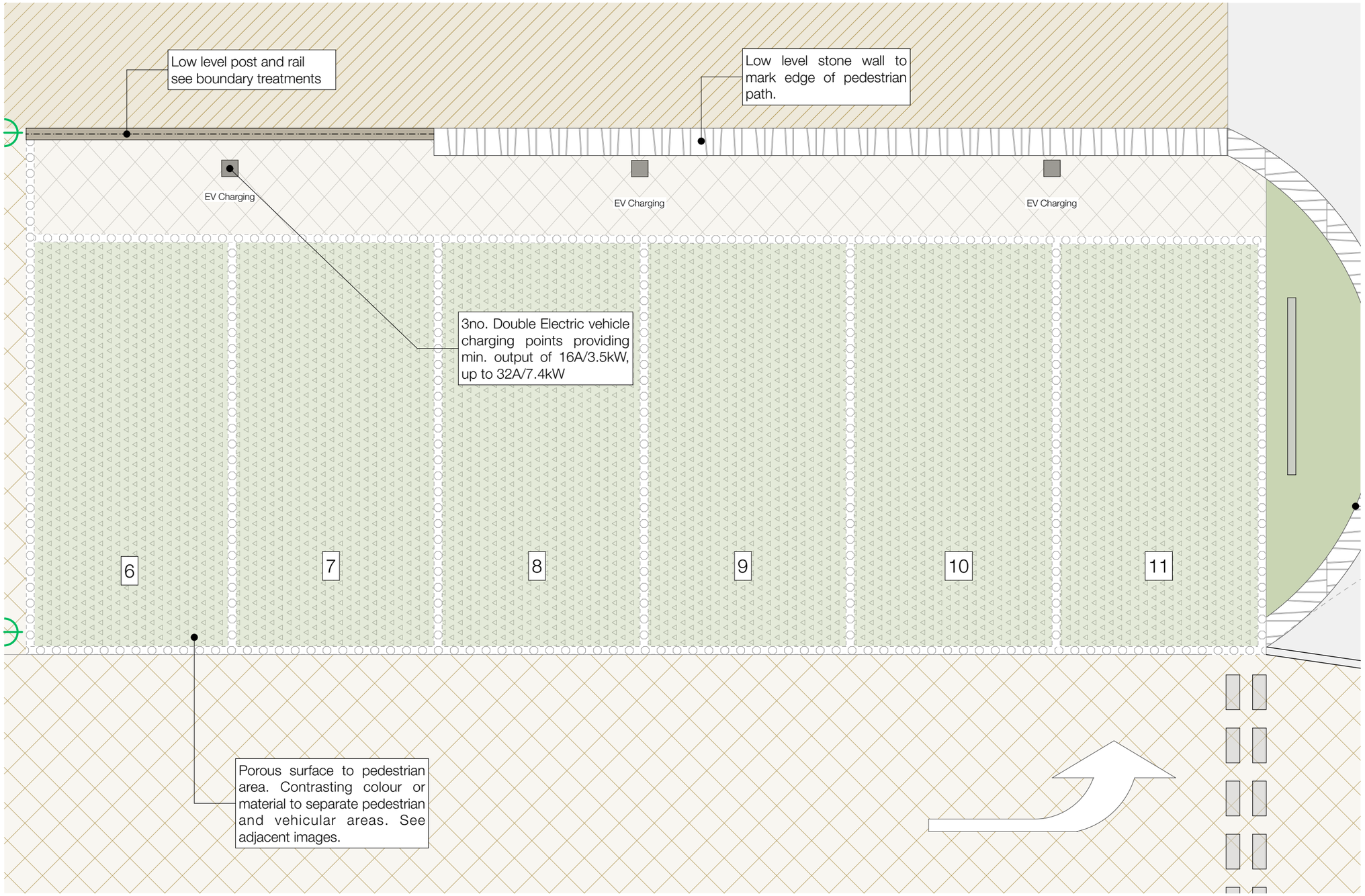

Electric Charging Parking Layout 1:50

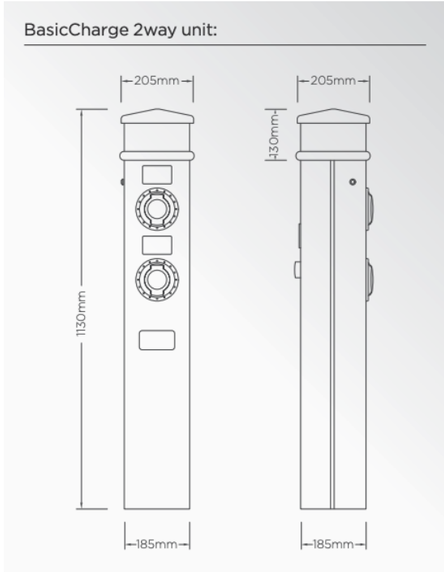

Example Electric Charging point

ONE17
ARCHITECTS & INTERIOR DESIGNERS

The Dyehouse, Armitage Bridge
Huddersfield, West Yorkshire HD4 7PD
T 01484 668 000 **F** 01484 668 001
E solutions@one17design.com
ONE17DESIGN.COM