Notes:

This drawing is the sole copyright of KPP Architects Ltd and reproduction in any form is forbidden unless permission is obtained in writing.

Do not scale from this drawing. Any descrepancies on site should be brought to the attention of KPP Architects Ltd.

Work and materials must comply with the current building regulations and codes of practice and be read in conjunction with building specifications and other sub-contractors information. All materials are to be installed in strict accordance with the recommendations of the manufacturers.

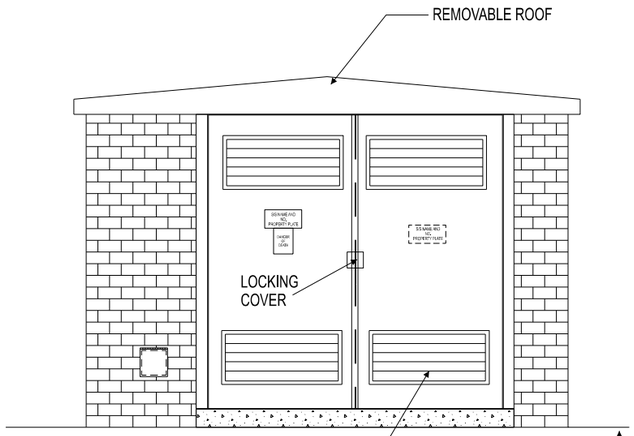

FRONT ELEVATION

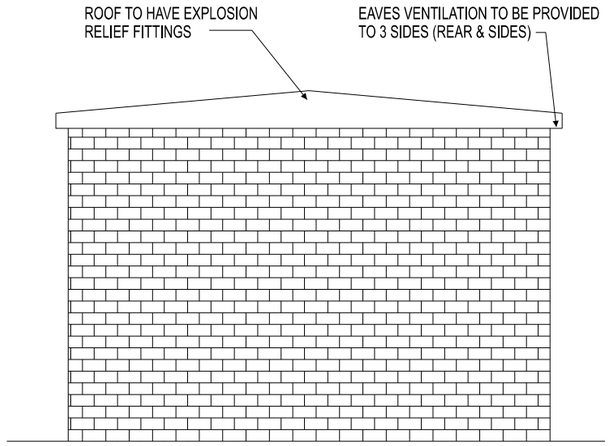

REAR ELEVATION

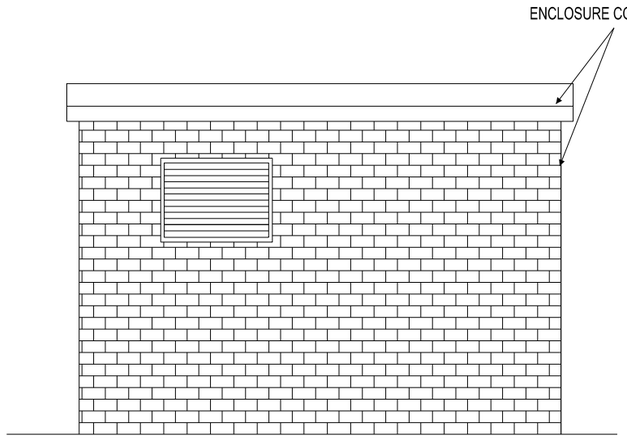

SIDE ELEVATION

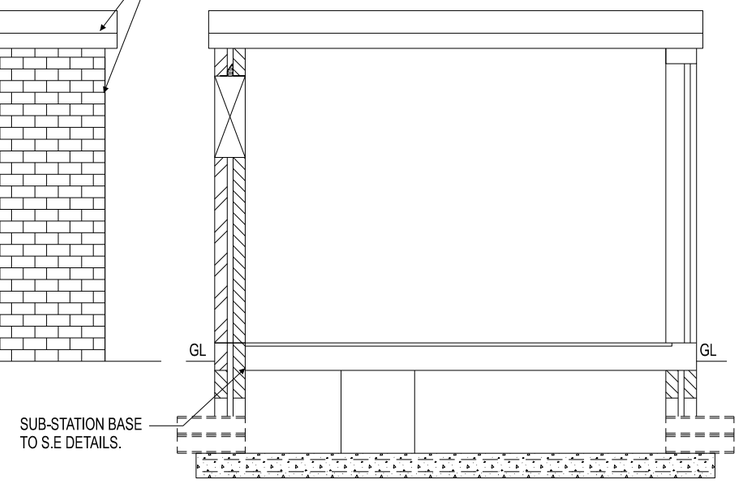

SECTION A-A

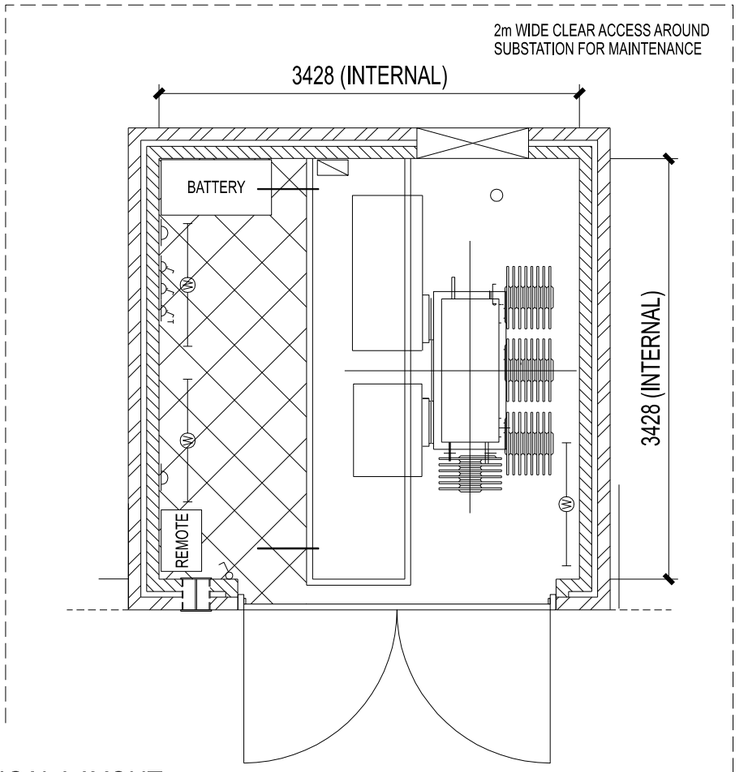

ELECTRICAL LAYOUT

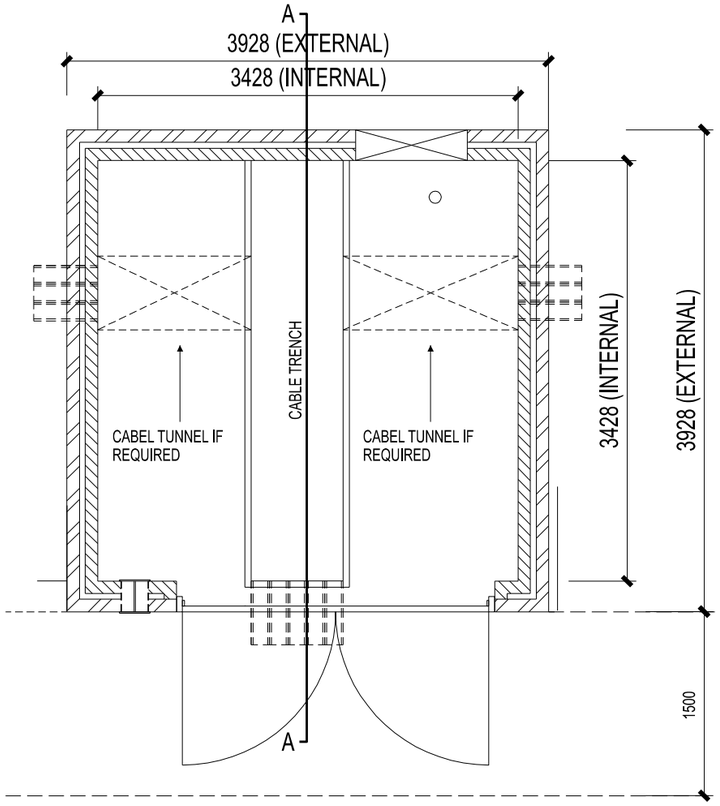

PLAN

REFER TO BMF-KPP-ZZ-DR-A-GA-2002 PROPOSED SITE PLAN FOR SUB STATION LOCATIONS

Rev	Description	By	Chkd	Date

Client

PARK VALLEY HUDDERSFIELD

Project Title

BLACKMOORFOOT ROAD, HUDDERSFIELD

Drawing Title

SUBSTATION DETAILS

KPP ARCHITECTS
Lodge House
12 Town Street
Horsforth, Leeds LS184RJ
T : +44 (0) 113 2390460
E : architects@kpp-leeds.co.uk
W : www.kpp-leeds.co.uk

Scale	Size	Date	Drawn	Checked
1:50	A3	JUNE '24	GK	JM

Status

PLANNING

KPP Job No **2406** Rev **.**

Number

BMF-KPP-ZZ-DR-A-DET-2019