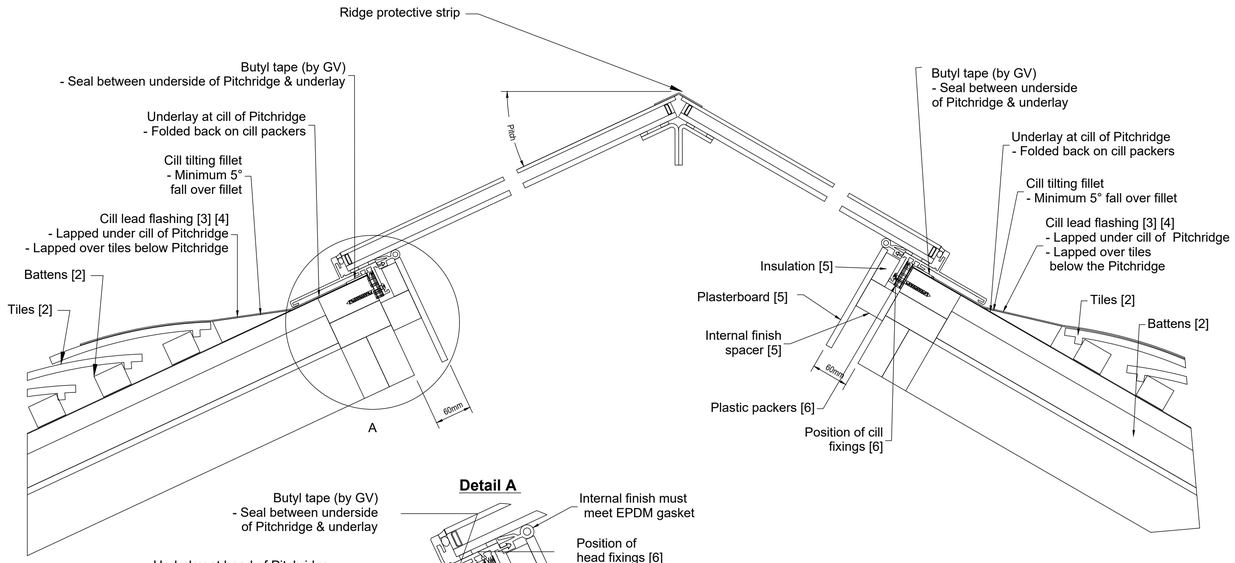

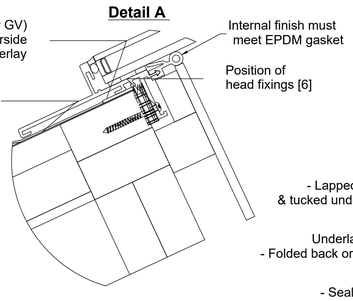

[1] Example glazing unit: Toughened double glazed unit
- 6mm HST toughened outer pane
- 16mm argon-filled cavity, black warm edge spacer
- 8mm HST toughened soft coat low-E inner pane

[2] Example of roofing:
- Plain tiles at 120mm gauge with double overlap
- 50 x 30mm battens
- 4 x 2in rafters and trimmers

[3] Flashing kit:
- If specified, then supplied by GV
- Otherwise supplied by others
- All lead to be code 4 (apx. 1.8mm)
- All aprons to be of underlay at least 1m wide
- Consider clipping down flashings and soakers in severe exposures

[4] Mortar beds are NOT suitable for use with this product
- In case of damage to the glass, the entire unit is expected to be replaced

[5] Example of internal finish:
- Plasterboard spaced away from the rafters/structural trimmers using 2in timber
- Space between plasterboard and aluminium frame of Pitchridge insulated

[6] Fixings:
- Woodscrews and a selection of plastic packers supplied by GV

Please Note
These products can be very heavy. GV strongly recommend that a structural engineer is consulted when designing the structure(s) that will support the Pitchridge and the surrounding roof. The roofing materials & construction shown in these details are presented as an example only. This drawing does not constitute a structural proposal.

Jamb Section

By others unless otherwise specified

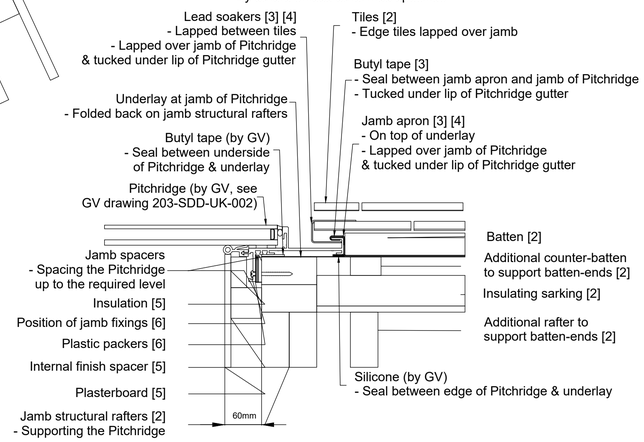

Apex glazing details
Scale 1:5

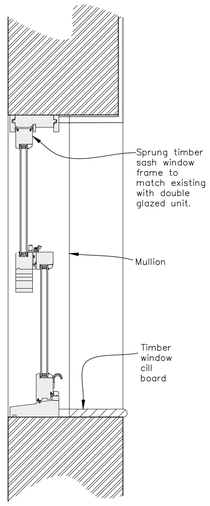

Typical section through sprung sash window
Scale 1:10

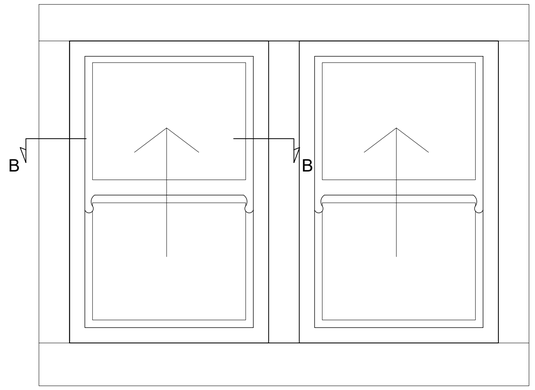

Elevation on proposed sash window
indicating line of section
Scale 1:10

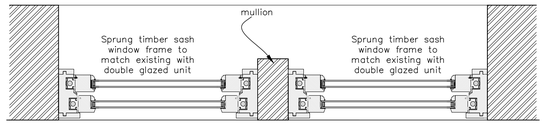

Section B – B Detail
Scale 1:10

Sprung Sash Windows	
Material	Manufactured in selected engineered laminated pine or hardwood, sourced from sustainable and managed forestry (FSC or PFEC certified)
Mechanism	Sashes are hung on spiral balances and have an additional feature, which allows the sash to be lowered into the room to allow cleaning and maintenance of the outside face.
Security (optional)	Fully tested to Secure by design standards BS 7950 (additional cost)
Weatherseal	The window is fully weather sealed to BS EN 6375–1 2009
Glazing	Windows are internally beaded with the external rebate up stand to give the appearance of putty glazing
Glass	The window is factory glazed with 16 mm thickness dual sealed units
Thermal Performance	Thermal performance is calculated by the standards of EN ISO 10077–1: 2006 and typically this window achieves a U–value of 1.6 W/m²K or better
Glazing Bars	Thru bars with slender double glazing sealed unit capped with clear silicone
Cills	Manufactured in Hardwood with options of cill projections
Fittings	A lockable Fitch fastener and two finger pulls to the bottom sash with options in colour and finish
Ventilation	A controllable trickle ventilator can be fitted to the window dependant on width of frame (See Drawing No TILT–160/07)
Restrictors	Restrictors which allows the opening of the sash to be restricted to 100mm is an option
Factory Finishing	To ensure the smooth operation and optimum performance of the window, apply 3 coats of sprayed applied microporous water based paint system

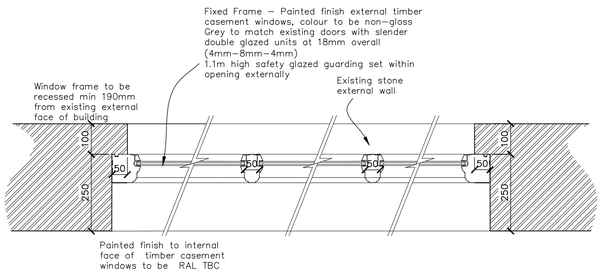

Horizontal section fixed casement window to outbuilding
Scale 1:10

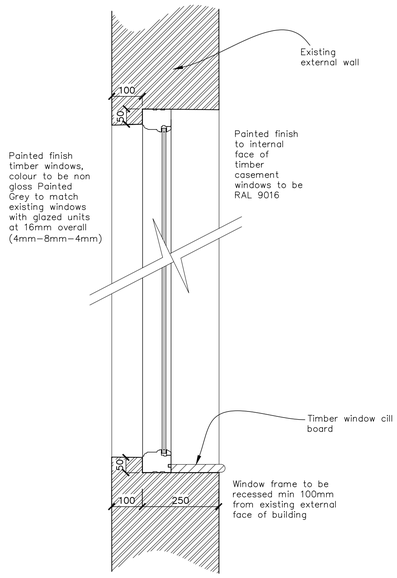

Vertical section fixed casement window to outbuilding
Scale 1:10

NOTES

1. No dimensions to be scaled. IF IN DOUBT ASK.

2. All dimensions must be checked and verified on site by the Contractor prior to the commencement of works and Hinchliffe Architecture & Design Ltd. to be notified of any discrepancies.

3. The copyright of these drawings remains the property or Hinchliffe Architecture & Design Ltd. They must not be reproduced in any way without prior written consent from the originator (Hinchliffe Architecture & Design Ltd.)

Health & Safety Note
The details on this drawing have been prepared on the assumption that a competent contractor will be carrying out the works. If the contractor(s) considers that there is insufficient Health and Safety information on this drawing, this should immediately be brought to the attention of the designer.

Rev.	Date	Description

Status: BUILDING REGULATIONS

hinchliffe architecture & design
Hinchliffe A&D
34 Carr View Road
Hepworth
Holmfirth
West Yorkshire
HD9 1HX
07921 907 162
01484 520 764
info@hinch-architecture.co.uk
www.hinch-architecture.co.uk

Client: MR & MRS M. JACKSON–SMITH

Project: BOTHY COTTAGE
WARD PLACE
HOLMFIRTH
WEST YORKSHIRE
HD9 2AB

Drawing Title: PROPOSED WINDOW DETAILS

Scale (at A1): AS SHOWN
Date: JULY 2024
Drg. no.: 214–23–BR05
Rev.: –

10 0 10 20 50 100mm NATURAL SCALE

ORIGINAL DRAWING SIZE 841 x 594