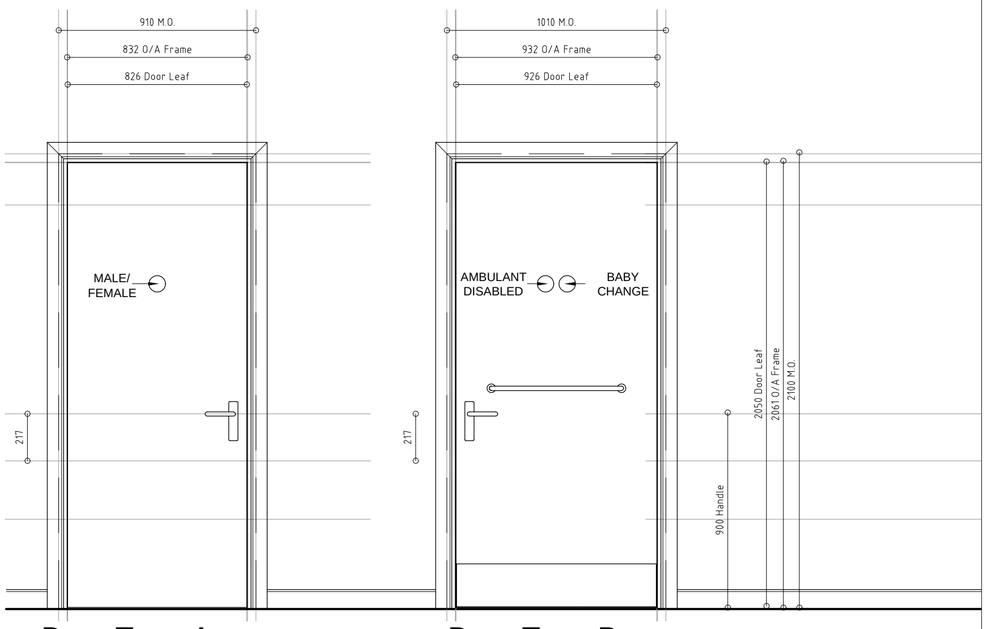

Door Type A

Door Type B

Proposed Door Type Elevations

Scale 1:20 @ A2

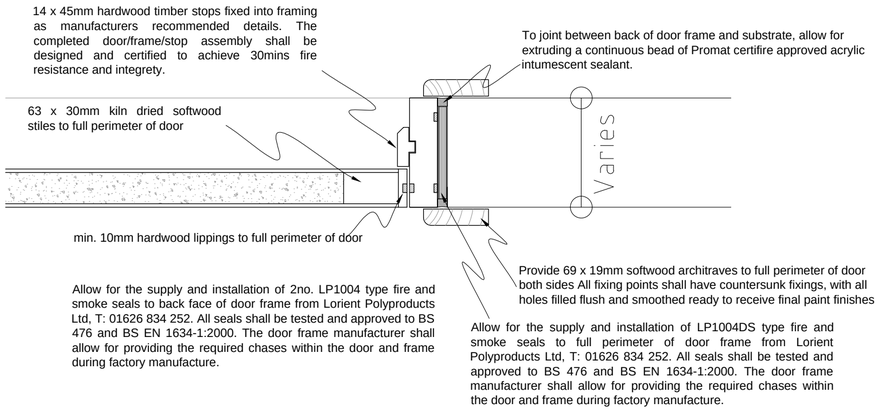

Typical Door Jamb Detail

Scale 1:5 @ A2

Notes

Door Hinges

89 x 101mm Certifire accredited butt hinge to suit 44mm/54mm door. Satin stainless steel finish grade 304. 4no. per door screw fixed to existing frames and new door with size 12 woodscrews.

Door Closers

Closer by Hoppe (Tel: 01902 484400) - Arrone AR8300 Series Certifire accredited overhead door closer or similar approved. Cover finish and arm colour to be PCC silver. Screw fixed as per manufacturer's instruction.

Door Accessories

To Male and Female WC facilities, contractor to reinstate existing signage.

Ref AR334E-SSS - Arrone 42 X 25mm shielded door stop, satin stainless steel finish.

Ref. AR903D-SSS - Arrone 'DISABLED WC' sign aluminium, 76mm diameter screw fixed, satin stainless steel finish.

Ref. AR913-SSS - Arrone 'BABY CHANGE' sign aluminium, 76mm diameter screw fixed, satin stainless steel finish.

Seals

Ref. LP1504SS - Lorient Polyproducts 15 x 4mm intumescent fire seal to door perimeter complete with integral brush smoke seal from Lorient Polyproducts Ltd, T: 01626 834 252. All seals shall be tested and approved to BS 476 and BS EN 1634-1:2000.

Ref. IS1192 - Batwing acoustic seals to full perimeter of door frame from Lorient Polyproducts Ltd, T: 01626 834 252. All seals shall be tested and approved to BS 476 and BS EN 1634-1:2000.

Ref. IS8005si - Automatic threshold drop down seal to full width of door threshold from Lorient Polyproducts Ltd, T: 01626 834 252. All seals shall be tested and approved to BS 476 and BS EN 1634-1:2000.

Note

Overall frame sizes shown are masons opening sizes. **DIMENSIONS SHOULD ALWAYS BE CHECKED ON SITE PRIOR TO MANUFACTURE**. Existing openings to be checked before order. Clear widths are to comply with current BS8300 and building Regs Part M standards. Contractor to make AHR Project Manager aware if any doors do not comply.

INTERNAL DOOR SPECIFICATION

Door and Frame Finish

New internal doors to be solid core door sets minimum 44mm finished thickness for 30min, 30dB doors, with kiln dried softwood stiles and core of high density flaxboard. 10mm exposed hardwood lippings to be provided to full perimeter.

All doors to be TRADA quality assured construction and tested and approved to BS 476:22:1987. New door to be faced with 4mm external grade plywood with timber veneer finish.

Facings

New Doors shall be finished as follows:

- To be confirmed.

Glazing

N/A

Signage

Provide all necessary fire and directional signage to doors in accordance with BS 549

Key to signage

'MALE'	-	Male WC Signage (See Schedule)
'BABY CH'	-	Baby Change Facility signage (See Schedule)
'DISABLED'	-	Disabled WC signage (See Schedule)

Fire Resistance

All new door sets designated as FD30 S fire doors are to be ½ hour fire doors with smoke seal and provided with Fire Certificate for Building Control. Softwood doorframes and architraves to approved profiles, to recieve paint finish. Frames and skirtings to be gloss finish in a contrasting colour. Colour to be confirmed.

Door Furniture

Suitable door furniture to all new door sets to be as ironmongery schedules. Doors with key operated locks to be suited with 3 sets of keys required for each lock with 3 master keys.

Door furniture to be satin/brushed finish stainless steel from Laidlaw Ironmongery or similar and equal approved. To be supplied by Leaderflush Shapland as part of complete door set solution.

Handles/Pulls

Ref. AR361/60-UN-SSS - Arrone Grade 316 Stainless Steel return to door lever on 6mm round rose stainless steel underplate (unsprung), 22mm diameter with 1no. Ref. AR361/67-SSS - Arrone 6mm euro profile escutcheon, satin stainless steel finish.

Ref. AR3616/22/600BF-SSS - Arrone 'D' shape pull handle 22mm diameter, bolt fixed at 600mm centres, satin stainless steel finish with 2no. Ref. AR361/67-SSS - Arrone 6mm euro profile escutcheon, satin stainless steel finish.

Locking Devices

Ref. AR910-S-60-SSS - Arrone Certifire accredited Euro Profile Mortice Sashlock Case with square forend, satin stainless steel finish.

Ref. AR8006-63-SC - Arrone Certifire accredited Euro Profile Mortice Deadlock Case with square forend, polished stainless steel finish.

Ref. AR326A - Arrone 20 x 200mm Satin Stainless steel lever action flush bolt (installed top & bottom of door as indicated elsewhere).

Single Multi-lock Euro Profile Suited Double Cylinder. Consult with church for specific suiting requirements - Details TBC at pre-start meeting - all barrels euro-profile

Ref. AR361/67-SSS - Arrone 6mm euro profile escutcheon, satin stainless steel finish (To ALL above).

	TYPE	LOCATION	WALL THICKNESS / WALL TYPE	DOOR LEAF SIZE	MASONS OPENING	FIRE RESISTANCE	dB RATING	VISION PANEL	DOOR FINISH	FRAME FINISH	LEVER HANDLE (PAIR)	PULL HANDLE & PUSH PLATE	FLUSH PULL	LOCKING DEVICES: SASH LOCK CASE	DEAD LOCK CASE	BATHROOM	FLUSH BOLT	DOUBLE CYLINDER	DISABLED TURN	HINGES: HINGE	DOOR CLOSER	DOOR ACCESSORIES: KICK PLATE	SIGNAGE	DOOR STOP	SEALS: INTUMESCENT SEAL	THRESHOLD SEAL	ACOUSTIC SEAL
D01	A	Gents WC	Existing	826mm x 2050mm	910mm x 2100mm	-	-	N	-	-	1	1	-	-	-	-	-	-	-	3	1	-	MALE	1	-	-	-
D02	B	Disabled WC	Existing	926mm x 2050mm	1010mm x 2100mm	FD30 SC S	-	N	-	-	1	-	-	-	Y	-	-	-	-	3	1	2	DISABLED BABY CH	1	-	-	-

Proposed Door Schedule

Rev	Description	Date	Dr by	App by
original by T.Nyansimera		date created June '17		approved by

AHR Building Consultancy Ltd
Norwich Union House
High Street
Huddersfield
HD1 2LF
United Kingdom

T +44(0)1484 537411
F +44(0)1484 530332
E huddersfield@ahr-global.com
www.ahr-global.com

client
Elim Pentecostal Church, Dewsbury

project
Toilet Remodelling
Ground Floor WC Layout

drawing
Proposed Door Schedule

project number		scale
2017.00667.000		**As Indicated @A2**
drawing number **E0-WC-07**	rev	issue status **Tender**

This drawing is to be read in conjunction with all related drawings. All dimensions must be checked and verified on site before commencing any work or producing shop drawings. The originator should be notified immediately of any discrepancy.
This drawing is copyright and remains the property of AHR.