DESIGN AND ACCESS STATEMENT

for

SAFEGUARDING

at

New Mill Infant School
Kirkroyds Lanre
Holmfirth
HD9 1LS.
for

Learning Accord Multi-Academy Trust

14 June 2024
REF: S9/10612

1.0 Introduction

The safeguarding project at New Mill Infant School consists of Low Level Fencing & gates, with some areas not having any fencing at all.

The project has been realised as a defining need by the current management team at New Mill Infant School to improve their existing safeguarding requirements and to secure their facilities, providing a more suitable environment for their pupils and staff. There are high ambitions for the future of the school and there is a clear desire to improve their existing facilities. There is clear evidence of trespassing and antisocial behaviour on school site, which will be rectified with the proposed new fencing.

2.0 Project Overview

New Mill Infant School is situated within Kirklees Council's Local Planning Authority bracket. This design and access statement has been formulated to support a full planning application for the safeguarding project at New Mill Infant School, Kirkroyds Lanre, Holmfirth, HD9 1LS.

The existing infrastructure and access roads in and around the site will be unaffected by the proposal.

3.0 Construction Logistics

The entrance to the school via Kirkroyds Lane and access around site will ensure all deliveries to and from site can be undertaken without any disruption to the school and neighbouring properties.

The proposed roads into the site will be appropriately fenced off with all the required safety signage being clearly displayed segregating site operatives from the school pupils and staff.

All site cabins and welfare facilities are to be located on the school's enclosed car parking area, which will be cordoned off. The cabins will be located within a self-contained compound with perimeter fencing and all the required health & safety signage clearly visible.

Setting

New Mill Junior School is located in an urban area and has boundaries with neighbouring properties.

For most of the school site, there is very low and/or no fencing at all. The school experience a large amount of trespassing and antisocial behaviour.

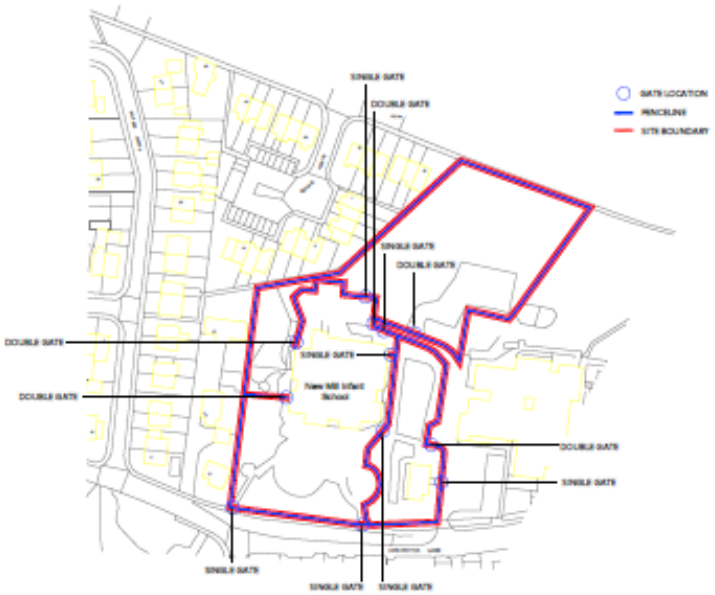

2.4m Fencing Locations in **Blue**

4.0 Design Proposals & Materials

Pallas security fencing is used as it provides an acceptable level of security but without an oppressive and intimidating appearance. The fencing is designed to be strong and resilient and yet remain unobtrusive. The fencing is installed in colours that enable the system to blend into the environment.

Panels are fully welded and manufactured from heavy gauge wires. The panels are designed with small vertical spacings, making the fencing difficult to climb and all fixings are tamper proof.

Pallas Fencing to be colour coated Green.

Surface Water Drainage:

The proposed security fencing will not necessitate the installation of any drainage.

5.0 - External Material Specification

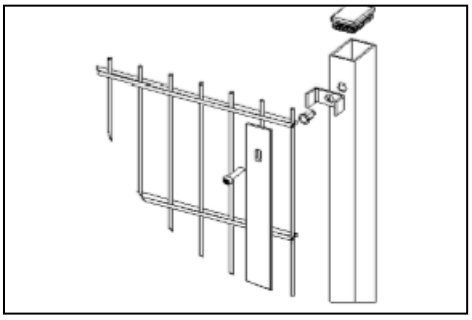

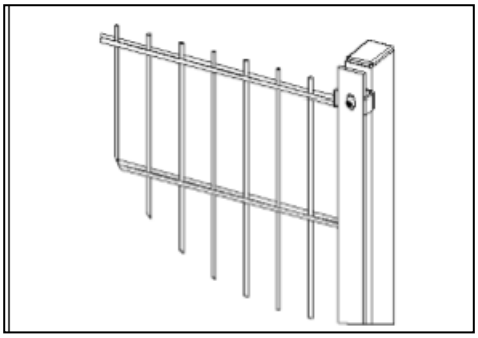

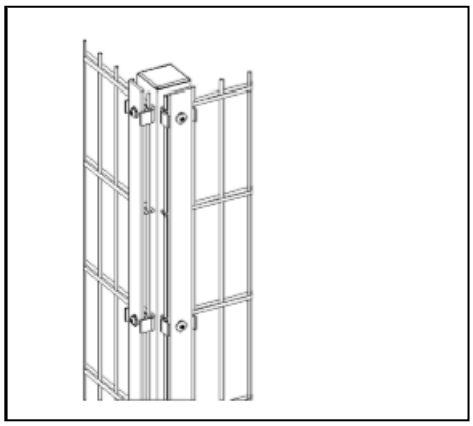

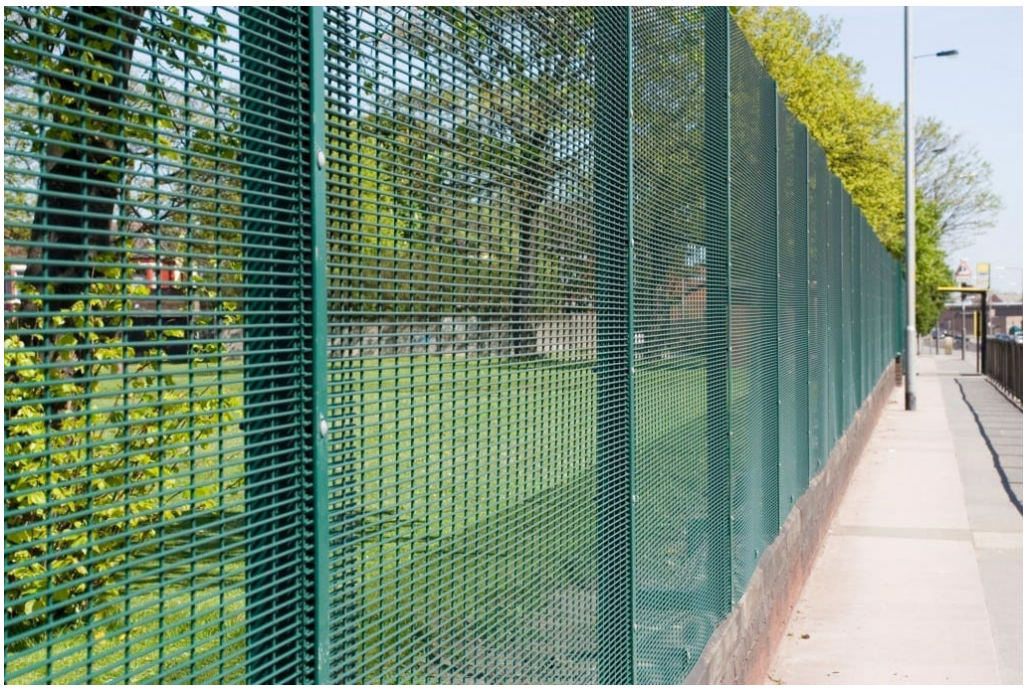

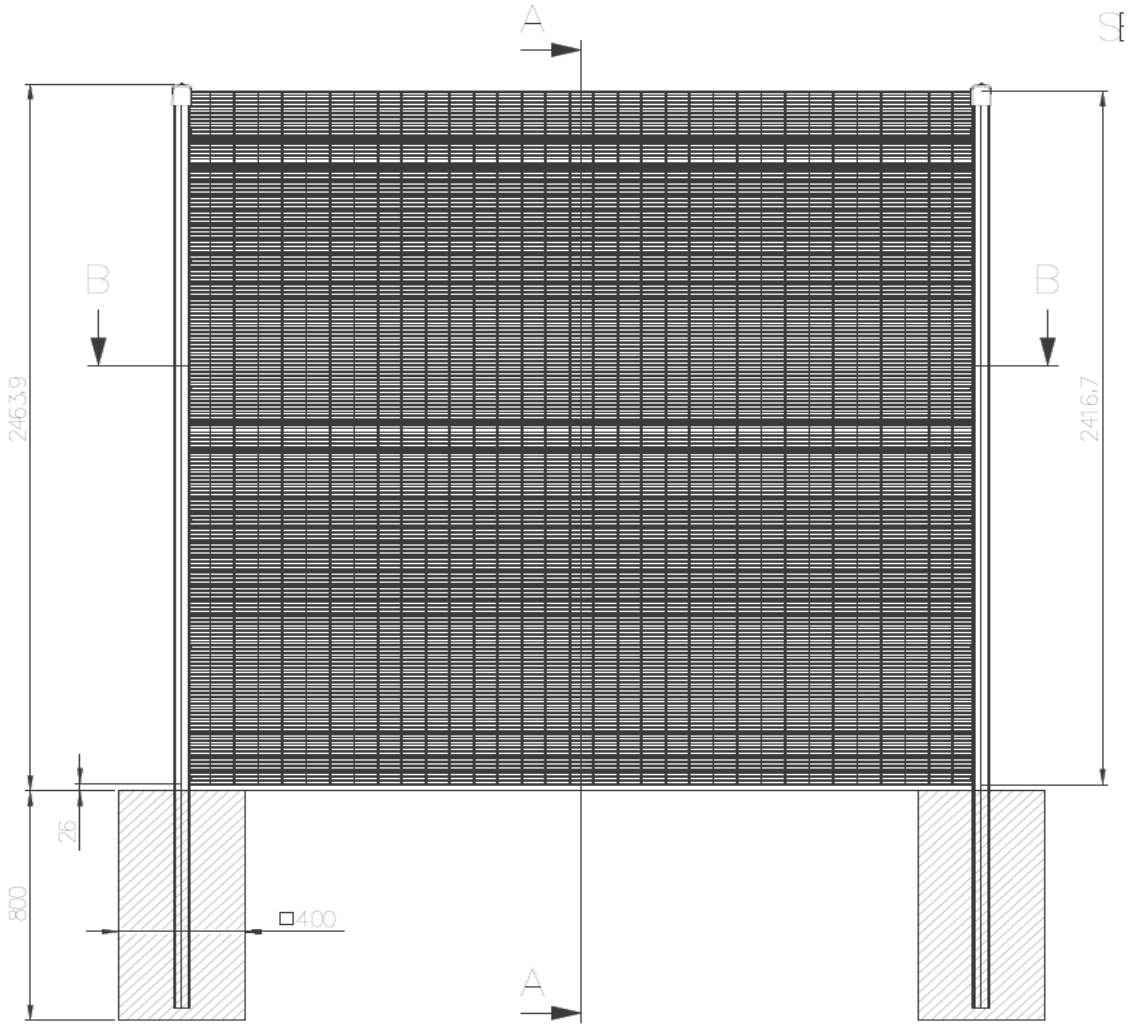

Proposed Fencing Elevation

Planning Drawings:

S9-10612-P-01-Location Plan.
S9-10612-P-02-Site Plan.
S9-10612-P-03-Fencing Elevations.
S9-10612-P-04-Gate Elevations.

6.0 Site and Building Context

Car parking is plentiful, with clear access and egress points for emergency vehicles. This will remain as original with no impact from the safeguarding project.

7.0 Legislation and Good Practice Guidance

We recognise the aims of the legislation, guidance and notes.

Our design process is influenced by:

- Wildlife and Countryside Act 1981
- Town and Country Planning Act 1990
- Environment Act 1995
- Hedgerow Regulations 1997

Best Practice Guides:

- BS 5837 (2005) Trees in Relation to Construction

The design has been undertaken to meet the needs of all the students, staff and visitors who will use the building and grounds. The design has been developed to ensure where practical full accessibility for all users is achieved.