EXISTING FRONT ELEVATION
SCALE 1 : 50

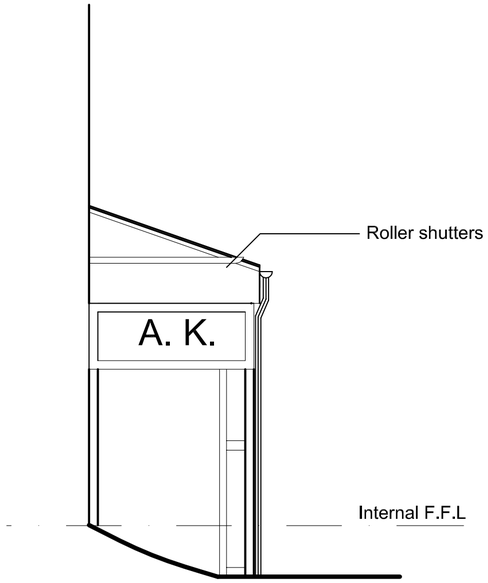

EXISTING SIDE ELEVATION
SCALE 1 : 50

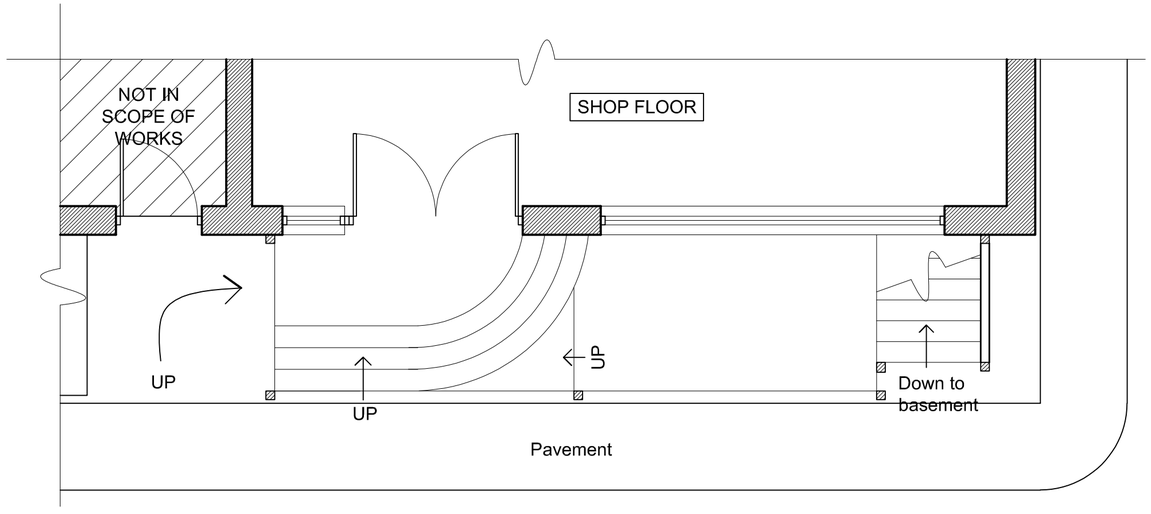

EXISTING PARTIAL FLOOR PLAN
SCALE 1 : 50

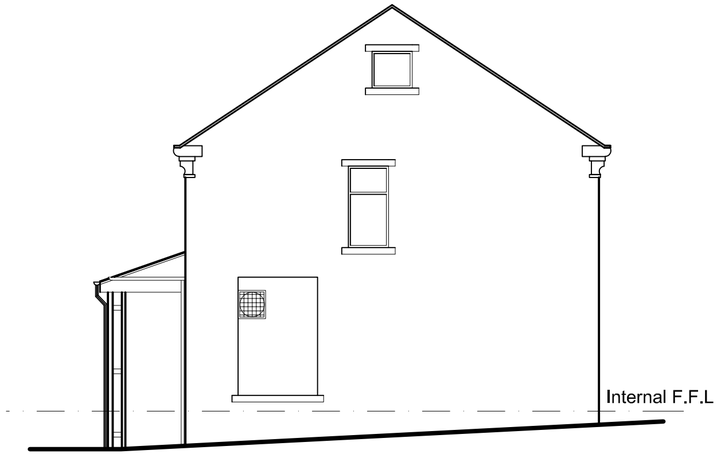

EXISTING SIDE ELEVATION
SCALE 1 : 100

GENERAL NOTES

REVISIONS

DO NOT SCALE FROM THIS DRAWING. INDEPENDENT CONTRACTORS ARE TO VERIFY ALL DIMENSIONS ON SITE BEFORE ANY WORKS ARE TO COMMENCE. ANY DISCREPANCIES ARE TO BE REPORTED TO THE DESIGNER. IF IN DOUBT ASK ! ALL WORK TO COMPLY TO CURRENT BUILDING REGULATIONS , AND TO BE IN ACCORDANCE WITH BRITISH STANDARDS AND CODES OF PRACTICE.

identity interior design partnership

84 TOWN STREET - HORSFORTH - LEEDS - LS18 4AP
tel : 0113 258 5391 fax : 0113 258 0875
e-mail:post@iidp.co.uk
www.iidp.co.uk

PROJECT.
4 - 6 Battye Street
Dewsbury
WF13 1PH

CLIENT.
Ziyarat

SIGNED.

DRAWING TITLE.
Existing Partial Floor Plan and Elevations

DRAWING NO.	SCALE.	DATE.
AT / 24 / 001	1:50 / 1:10 @ A2	02 . 04 . 23

DRAWN BY.
C.Pink