YEW TREE ROAD
BIRCHENCLIFFE
HUDDERSFIELD
HD2 2FY

SUDS DRAINAGE OPERATION & MAINTENANCE STRATEGY

DOCUMENT No:
22046-DSR-002-D

29th April 2025

Issue Sheet.

Prepared	Date		Checked	Date
MJM	08.08.24		MJM	08.08.24

Revisions	Comment	Date
A	Initial Issue	08.08.24
B	Updated to LLFA comments	22.11.24
C	Updated to LLFA comments	24.03.25
D	Updated to LLFA comments	29.04.25

The report is based on the information that has been acquired and / or made available to Advant Engineers via the various searches and consultations undertaken as part of the Drainage Strategy. In some cases, anecdotal information has been relied upon, where documented evidence has been lacking.

The conclusions drawn in the above report are considered correct although any subsequent additional information may allow refinement of the conclusions.

All work carried out in preparing this report has utilised and is based upon Advant Engineers current professional knowledge and understanding of current UK standards and codes, technology and legislation. Changes in this legislation and guidance may occur at any time in the future and cause any conclusions to become inappropriate or incorrect.

This report has been prepared using information contained in maps and documents prepared by others. Advant Engineers can accept no responsibility for the accuracy of such information.

Table of Contents

Table of Contents 3
1. Introduction 4
2. SUDS Drainage Layout 4
3. SUDS Operations and Maintenance 5
4. Post Adoption SUDS Operations and Maintenance 8
APPENDIX A Drainage Layout 9
APPENDIX B Hydrobrake Details 10
APPENDIX C Carlow Concrete Details 11

1. Introduction

1.1. Advant Engineers Ltd has been commissioned by North Park Homes to undertake the drainage design at the scheme off Yew Tree Road in Birchencliffe.

1.2. This report is to outline the SUDS drainage operations and maintenance strategy, this will determine the different SUDS features on the site, the necessary maintenance of the SUDS features and the frequency in which they should be inspected.

1.3. This report should be read in conjunction with drawings 22046-113 & 22046-115 and associated architectural and engineering drawings. (See Appendix A)

2. SUDS Drainage Layout

2.1. Surface water from the roofs will be collect by means of guttering and rainwater down pipes, and runoff from the driveways will be collected via linear drainage such as and ACO drain, these will then be connected directly into the adopted surface water system.

2.2. The surface water drainage for the site consists below ground pipes and chambers that discharge to the public sewer, the attenuation on site is provided within a concrete tank and the flow is restricted by a Vortex Flow Control, specifically a Hydro Brake Unit by Hydro International. (See Drawing 22046-113 for drainage layout plan.

2.3. The tank on site has been sized to accommodate the 1 in 100 year + 40% climate change rainfall event, and it has been located under a shared private drive, it has been located here to prevent a large structure being located under the Kirklees adopted highway.

2.4. Details of the tank can be found in Appendix C and show the inspection and entry points on either end of the tank.

3. SUDS Operations and Maintenance

3.1. Responsibility of the adopted drainage system, flow control and attenuation tank will be with Yorkshire Water post adoption, however during construction and up to the point of adoption the developer will be responsible for the operation and maintenance of the drainage system and its various SUDS elements.

3.2. The convention drainage system, consisting of standard manholes and pipework, are maintained by sub-contractors using specialist machinery to clear gullies, pipework and storage zones of rubbish and sediment. The frequency of this task is determined by the need, this can be identified by a reduced flow through the pipework, water surcharging or the visible sight of sediment or buildup in the manholes.

3.3. Across the adoptable drainage system corrective maintenance should be undertaken on an ad hoc basis defendant on need, these task should include:

- Repair to access chambers / manhole covers
- Jetting and clearing of blockages
- Repair any broken pipes, manhole sections, step irons

3.4. Beyond the convention drainage manholes and pipework, the adoptable system also has a Flow Control manhole and a concrete attenuation tank that requires routine inspection and maintenance as outlined below.

FLOW CONTROL MANHOLE – HYDROBRAKE UNIT AND PENSTOCK

MAINTENANCE SCHEDULE	REQUIRED ACTION	FREQUENCY
Regular Maintenance	Vacuum clean the sump in the manhole.	Annually
	Inspect pipework for silt accumulation and jet-vac clean.	Annually
	Clean spindle threads on penstock by hosing down with clean water, then apply grease to the spindle.	Every 6 months
	All other moving parts should be lightly oiled / greased.	As required.
Remedial Actions	Repair / rehabilitate inlets, outlets and vents.	As required.
	Replace hydrobrake unit should it become damage and fail to operate.	As required.
	Anytime the hydrobrake unit is removed then new neoprene seals should be installed.	As required.
Monitoring	Check that flow control manhole is emptying, there should be little or no water after consecutive days of dry weather.	Twice in the first year, once after heavy rainfall, and then once after consecutive days of dry weather. After that annual inspections.
	The hydrobrake has one moving part which is the bypass gate, and the penstock has a gate operated by a rising spindle, both elements should be opened and closed to check their operation.	Every 3 months
	Check for any leakages between the hydrobrake / penstock units and the concrete mounting block.	Annually
	Check tightness of all fixing bolts.	Annually
	Whilst the penstock is in the fully open position, inspect the seals and the sealing surface.	Annually

3.5. The above is scheduled maintenance, additional inspections and cleaning of the hydrobrake chamber should be undertaken in the event of a failure or after every extreme flood event.

3.6. Access is provided to the tank via the private shared driveway to plots 3-5, maintenance vehicles can safely pull off the public highway and park over the tank to undertake maintenance / remedial works.

3.7. Most inspections and maintenance operations can be undertaken from above ground, man entry into the tank should be avoided whenever possible, however if this is unavoidable then there are 2 access chambers on the tank that can be used.

3.8. Anyone entering the attenuation tank should be suitable trained in confined spaces, they should never undertake solo inspections, and they should utilise a fall arrest harness attached to a tripod mounted over the manhole.

3.9. See Appendix B for the Hydrobrake technical data and company brochure.

CONCRETE ATTENUATION TANK – CARLOW CONCRETE

MAINTENANCE SCHEDULE	REQUIRED ACTION	FREQUENCY
Regular Maintenance	Inspect and identify areas that are not operating correctly. If required take remedial action.	Monthly for the first 3 months and then annually.
	Jet clean the inside of the tank for sediment removal	Annually
Remedial Actions	Repair / rehabilitate inlets, outlets and vents.	As required.
Monitoring	Inspect / check all inlets, outlets and vents to ensure that they are in good condition and operating as designed.	Annually

3.10. The above is scheduled maintenance, additional inspections and cleaning of the tank should be undertaken in the event of a failure or after every extreme flood event.

3.11. Access is provided to the tank via the private shared driveway to plots 3-5, maintenance vehicles can safely pull off the public highway and park over the tank to undertake maintenance / remedial works.

3.12. Most inspections and maintenance operations can be undertaken from above ground, man entry into the tank should be avoided whenever possible, however if this is unavoidable then there are 2 access chambers on the tank that can be used.

3.13. Anyone entering the attenuation tank should be suitable trained in confined spaces, they should never undertake solo inspections, and they should utilise a fall arrest harness attached to a tripod mounted over the manhole.

3.14. See Appendix C for the Tank technical data and company brochure.

4. Post Adoption SUDS Operations and Maintenance

4.1. The above operation and maintenance requirements are a minimum guidance and as it is noted above both of these SUDS features are to be adopted by Yorkshire Water who will have their own maintenance schedule that we have faith will be concise and robust to maintain their own assets.

4.2. In addition, it is expected that Yorkshire Water will have a standard set of Risk Assessments and Health & Safety guidance on the maintenance of all of their drainage assets to ensure a safe working environment for their employees when undertaking such tasks.

4.3. In the event of a blockage or asset failure then Yorkshire Water should be contacted who will then be responsible for the timely repair of the failure and reinstating the asset to its working status.

APPENDIX A
Drainage Layout

YW REF NO:
H-3-264-976

YW NOTES:

1. ALL ADOPTABLE SEWER WORKS AND MATERIAL TO BE IN ACCORDANCE WITH 'CODE FOR ADOPTION'. THE RELEVANT BRITISH/EUROPEAN AND YORKSHIRE WATER'S STANDARDS/REQUIREMENTS/ADDENDUM TO THE MECHANICAL AND ELECTRICAL SPECIFICATION AND KITEMARKED.
2. MANHOLE COVERS SHALL/MUST HAVE A CLEAR OPENING OF 600mm AND SHALL BE CLASS D400 TO BS EN 124 WITH 150mm DEEP FRAMES IN HIGHWAYS.
3. FILLED GROUND MUST BE FILLED AND CONSOLIDATED UNDER THE SUPERVISION AND TO THE SATISFACTION OF YORKSHIRE WATER BEFORE ANY SEWER WORKS ARE CARRIED OUT.
4. YORKSHIRE WATER IS NOT OBLIGED TO ACCEPT FILTER DRAIN/LAND DRAINAGE RUN-OFF INTO THE PUBLIC SEWER NETWORK OR ADOPTABLE DRAINAGE SYSTEM (DIRECTLY OR INDIRECTLY). AN ALTERNATIVE METHOD OF DISPOSAL OF THE LAND DRAINAGE RUN-OFF WILL THEREFORE BE REQUIRED AND YOU WILL HAVE TO LIAISE WITH THE LOCAL AUTHORITY, LAND DRAINAGE SECTION REGARDING THE DISPOSAL OF THE FILTER/LAND DRAINAGE RUN-OFF.
5. THE ADOPTABLE SEWERS SHOULD BE A MINIMUM OF 1.0m AND MANHOLES 0.5m FROM KERB FACES AND SERVICE MARGINS.
6. SEWERS MUST HAVE A 5.0m CLEARANCE FROM TREES AND HEDGES OR THE WIDTH OF THE CANOPY AT MATURE HEIGHT.
7. SEWERS TO BE LAID IN CLASS 'S' BEDDING (**150mm GRANULAR BED AND SURROUND**). WHERE DEPTH OF COVER TO TOP OF THE SEWER IS LESS THAN 1.2m IN HIGHWAYS AND VERGES (**OR LESS THAN 0.9m IN NON VEHICULAR ACCESS AREAS**) THEN A CONCRETE SLAB SHOULD BE PROVIDED ABOVE GRANULAR BED AND SURROUND.
8. BEDDING AND BACKFILL MATERIAL TO CONFORM TO THE REQUIREMENT OF WATER INDUSTRY SPECIFICATION 4-08-02 (**TABLE A2**).
9. YORKSHIRE WATER POLICY IS THAT TYPE "C" BRICK MANHOLES AND 1050mm DIAMETER MANHOLES RINGS ARE NOT PREFERRED. INSTEAD, IT IS PREFERRED THAT YOU USE A TYPE "B" MANHOLE WITH 1200mm DIAMETER OR 1500mm DIAMETER RINGS, WITH THE OPENING SITED OVER THE CHANNEL WHERE THE DEPTH OF COVER TO THE PIPE IS 1.0m - 1.5m.
10. ADOPTABLE PLASTIC SEWER PIPES TO BE BSI KITEMARKED (**CERTIFIED TO WIS 4-35-01** AND **BS EN 13476**). ADOPTABLE PLASTIC SEWER PIPES TO BE LAID IN MAXIMUM 3 METRE LENGTHS UNLESS THERE IS A SPECIFIC OPERATIONAL NEED TO LAY LONGER LENGTHS. PLASTIC CHANNEL SECTIONS IN MANHOLES ARE NOT ACCEPTABLE AND YORKSHIRE WATER WOULD REQUIRE CLAYWARE CHANNELS IN MANHOLES.
11. THE MINIMUM CRUSHING STRENGTH FOR CLAY PIPES SHOULD BE AS FOLLOWS: 100mm DIA 40kN/M, 150mm DIA 40kN/M, 225mm DIA 45kN/M, 300mm DIA 72kN/m. THE MINIMUM CRUSHING STRENGTH FOR CONCRETE PIPES SHOULD BE - (CLASS 120 TO EN 1916 / BS 5911-1 2002). PLASTIC PIPES SHOULD CONFORM TO WIS 4-35-01 AND BS EN 13476.
12. WHERE A B125 COVER AND FRAME HAS BEEN APPROVED, THIS **MUST NOT** BE COATED IN PLASTIC AND MUST HAVE LIFTING EYES SUITABLY SIZED TO ACCOMMODATE STANDARD LIFTING KEYS. SCREW DOWN COVERS ARE NOT ACCEPTABLE.
13. THERE MUST BE ENOUGH CLEARANCE AT CROSSOVERS TO ACCOMMODATE BEDDING TO BOTH PIPES, APPROX. 300mm : IF CROSSOVER IS NEAR THE ROCKER THEN THE CLEARANCE NEEDED MAY NEED TO BE INCREASED.

PHASE: 0

MH No.	MANHOLE DIAMETER (mm)	MANHOLE TYPE	COVER LEVEL (m)	INVERT LEVEL (m)	DEPTH TO SOFFIT (m)	EASTING (m)	NORTHING (m)
EXMH	-	-	168.850	167.300	1.400	412010.904	418916.266
PS1	450	Type E	179.600	178.300	1.100	411912.360	419004.388
PS2	450	Type E	179.100	178.200	0.750	411924.962	419004.851
PS3	450	Type E	179.700	178.450	1.100	411943.641	419033.876
PS4	900	Type D	178.379	175.800	2.429	411941.763	418990.951
PS5	900	Type D	178.000	174.875	2.975	411956.680	418998.139
PS6	900	Type D	177.320	174.750	2.420	411966.799	418996.858
PS7	450	Type E	176.200	174.950	1.100	412007.457	419013.613
PS8	900	Type D	175.200	172.800	2.250	412007.266	418982.941
S1	1200	Type B	179.372	177.400	1.672	411922.478	418993.525
S2	1350	Type C	179.419	178.000	1.269	411948.915	419032.394
S3	1350	Type C	179.025	177.350	1.375	411944.734	419017.516
S4	1500	Type B	178.372	175.300	2.772	411942.705	418995.628
S5	1200	Type A	177.681	174.500	2.881	411956.262	418992.898
S6	1200	Type A	177.460	174.100	3.060	411960.461	418991.822
S7	1350	Type B	177.173	173.650	3.073	411966.343	418991.437
S8	1200	Inspection chamber on tank	176.600	172.500	1.900		
S9	1200	Inspection chamber on tank	177.370	172.450	4.470		
S10	1500	Type A	177.492	172.400	4.642	411982.614	419023.341
S11	1800	Type B	176.486	172.400	4.642	411980.222	418990.293
S12	See Drawing 22046-106					412007.583	418986.935
S13	1200	Type B	174.692	172.000	2.242	412016.434	418984.669
S14	1200	Type C	173.145	171.800	0.895	412021.457	418968.710
S15	1200	Type B	179.659	178.000	1.509	411920.979	419004.344
S16	1350	Type C	171.517	170.100	1.267	412019.407	418948.556
F1	1200	Type B	178.351	176.557	1.644	411944.664	418998.083
F2	1350	Type C	177.595	176.000	1.445	411959.128	418994.218
F3	1200	Type B	177.099	175.000	1.949	411969.072	418993.323
F4	1350	Type C	175.865	174.350	1.365	411994.073	418991.371
F5	1200	Type B	175.685	172.100	2.350	412016.813	418986.588
F6	1350	Type C	173.220	171.600	1.470	412022.321	418970.511
F7	1350	Type C	171.659	170.309	1.200	412020.687	418949.607
F8	1350	Type C	169.300	167.950	1.200	412013.898	418923.206
PF1	900	Type D	179.000	177.550	2.150	411937.148	419004.480
PF2	450	Type E	178.270	177.300	0.820	411944.145	418990.520
PF3	900	Type D	177.213	175.330	1.733	411969.349	418996.623
PF4	450	Type E	177.078	175.300	1.628	411968.463	418986.071
PF5	900	Type D	175.100	172.940	2.350	412012.253	418983.474
PF6	900	Type D	175.120	173.500	1.570	412016.214	418993.106

NOTES

1. THIS DRAWING IS PRODUCED FOR USE IN THIS PROJECT ONLY AND MAY NOT BE USED FOR ANY OTHER PURPOSE. THE CONSULTING ENGINEERS ACCEPT NO LIABILITY FOR THE USE OF THIS DRAWING OTHER THAN THE PURPOSE FOR WHICH IT WAS INTENDED IN CONNECTION WITH THIS PROJECT AS RECORDED ON THE TITLE BLOCK FIELDS 'PURPOSE FOR ISSUE' AND 'FILE STATUS CODE'.
2. THIS DRAWING MAY NOT BE REPRODUCED IN ANY FORM WITHOUT PRIOR WRITTEN AGREEMENT FROM ADVANT ENGINEERS.
3. DO NOT SCALE FROM THE DRAWING, USE WRITTEN DIMENSIONS ONLY.
4. ALL DIMENSIONS ARE IN MILLIMETRES UNLESS OTHERWISE SPECIFIED.
5. DISCREPANCIES MUST BE REPORTED BACK TO THE ENGINEER PRIOR TO CONSTRUCTION.
6. THIS DRAWING TO BE READ IN CONJUNCTION WITH ALL RELEVANT ADVANT ENGINEERS DRAWINGS AND SPECIFICATIONS.

KEY

- EXISTING COMBINED SEWER
- EXISTING SW SEWER
- PROPOSED FOUL SEWER
- PROPOSED SW SEWER
- PROPOSED CW SEWER
- SEWER EASEMENT

REV	AMENDMENTS	BY	DATE
O	UPDATED TO CLIENT COMMENTS	MJM	11.03.25
N	UPDATED TO LLFA COMMENTS	MJM	20.02.25
M	FFLS OF PLOTS 5-8 AMENDED	MJM	22.01.25
L	DISCHARGE RATE REDUCED TO 3.5 l/s	MJM	23.11.24
K	UPDATED TO YW COMMENTS	MJM	08.11.24
J	UPDATED TO YW COMMENTS	MJM	19.10.24
I	UPDATED TO YW COMMENTS	MJM	30.09.24
H	UPDATED TO YW COMMENTS	MJM	12.09.24
G	UPDATED TO YW COMMENTS	MJM	24.07.24
F	DRAINAGE UPDATED	MJM	25.05.24
E	DRAINAGE UPDATED	MJM	17.04.24
D	DRAINAGE UPDATED	MJM	05.04.24
C	DRAINAGE UPDATED	MJM	01.03.24
B	DRAINAGE UPDATED	MJM	24.07.23
A	INITIAL ISSUE	MJM	13.06.23

FOR APPROVAL

STATUS		CHK'D
PRELIMINARY	✓	MJM
FOR COMMENT	✓	MJM
FOR APPROVAL	✓	MJM
FOR CONSTRUCTION		
AS BUILT		

advant ENGINEERS
Building 3 Leeds City West Business Park,
Geldard Road, Leeds, LS12 6LN
0113 873 0607
leeds@advantengineers.co.uk

CLIENT
NORTH PARK HOMES LTD

CONTRACT
YEW TREE ROAD
BIRCHENCLIFFE
HUDDERSFIELD

TITLE
S104 DRAINAGE LAYOUT PLAN

DRAWN	MJM	CHK'D	MJM
SCALE	1:250 @ A1	DATE	13.06.23

JOB No	DRG No	REV
22046	113	O

EXISTING MANHOLE WILL BE NEED TO BE INSPECTED BY A YORKSHIRE WATER INSPECTOR TO ENSURE IT CAN ACCOMMODATE THE PROOSED CONNECTION AND TO CHECK IF ANY REMEDIAL WORKS ARE REQUIRED

APPENDIX B
Hydrobrake Details

Technical Specification

Control Point	Head (m)	Flow (l/s)
Primary Design	2.700	3.900
Flush-Flo™	0.323	2.563
Kick-Flo®	0.669	2.051
Mean Flow		2.866

hydro-int.com/patents

Hydro-Brake® Optimum Flow Control including:

- 3 mm grade 304L stainless steel
- Integral stainless steel pivoting by-pass door allowing clear line of sight through to outlet, c/w stainless steel operating rope
- Beed blasted finish to maximise corrosion resistance
- Stainless steel fixings
- Rubber gasket to seal outlet
- Variable flow rate post installation via adjustable inlet
- Indicative Weight: 10 kg

BBA APPROVAL INSPECTION TESTING CERTIFICATION CERTIFICATE 08/4596

wrc approved PT/503/0422 Valid: 01/04/2022 - 31/03/2027

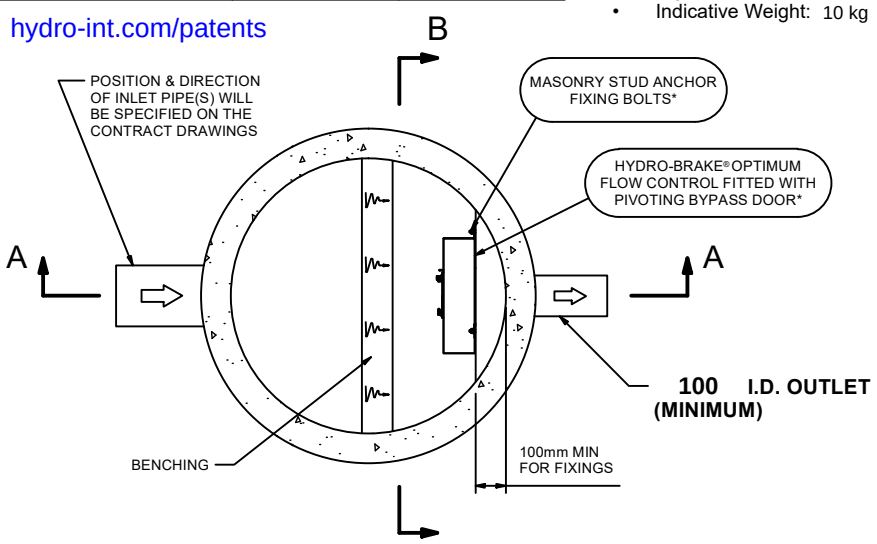

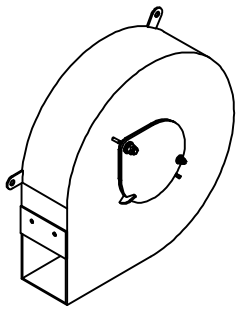

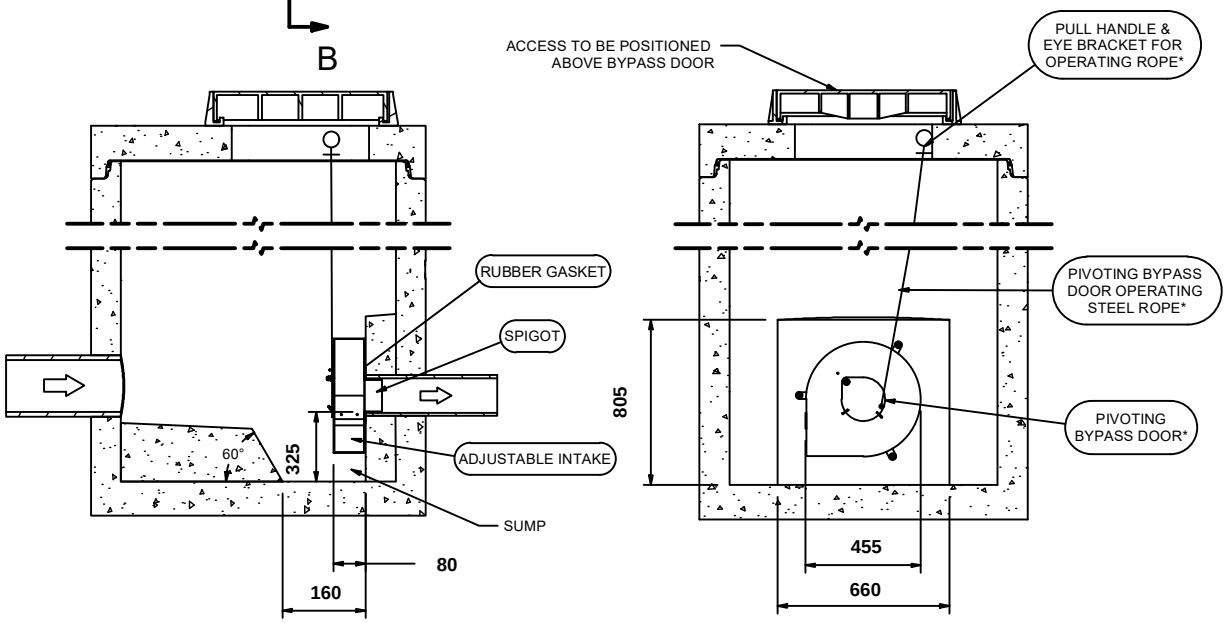

SECTION A-A

SECTION B-B

IMPORTANT: ⬭ LIMIT OF HYDRO INTERNATIONAL SUPPLY
THE DEVICE WILL BE HANDED TO SUIT SITE CONDITIONS
FOR SITE SPECIFIC DETAILS AND MINIMUM CHAMBER SIZE REFER TO HYDRO INTERNATIONAL
ALL CIVIL AND INSTALLATION WORK BY OTHERS
* WHERE SUPPLIED
HYDRO-BRAKE® FLOW CONTROL & HYDRO-BRAKE® OPTIMUM FLOW CONTROL ARE REGISTERED TRADEMARKS FOR FLOW CONTROLS DESIGNED AND MANUFACTURED EXCLUSIVELY BY HYDRO INTERNATIONAL

THIS DESIGN LAYOUT IS FOR ILLUSTRATIVE PURPOSES ONLY. NOT TO SCALE.

DESIGN ADVICE !

The head/flow characteristics of this SHE-0075-3900-2700-3900 Hydro-Brake® Optimum Flow Control are unique. Dynamic hydraulic modelling evaluates the full head/flow characteristic curve.
The use of any other flow control will invalidate any design based on this data and could constitute a flood risk.

Hydro International A CRH COMPANY

DATE	30/09/2024 15:21
SITE	Yew Tree Road, Birchencliffe
DESIGNER	Michael Micklethwaite
REF	22046

SHE-0075-3900-2700-3900
Hydro-Brake® Optimum

© 2024 Hydro International Ltd • Unit 2, Rivermead Court • Kenn Business Park • Windmill Road • Kenn • Clevedon • BS21 6FT • Tel: 01275 878371 • www.hydro-int.com • Email: enquiries@hydro-int.com

michael@advantengineers.co.uk

Technical Specification

	Original Setting		Minimum Setting		Maximum Setting	
Control Point	**Head (m)**	**Flow (l/s)**	**Head (m)**	**Flow (l/s)**	**Head (m)**	**Flow (l/s)**
Primary Design	2.700	3.900	2.700	3.504	2.700	4.224
Flush-Flo™	0.323	2.563	0.400	2.111	0.303	2.914
Kick-Flo®	0.669	2.051	0.671	1.841	0.670	2.239
Mean Flow		2.866		2.540		3.137

BBA APPROVAL INSPECTION TESTING CERTIFICATION
CERTIFICATE No 08/4596

wrc approved™
PT/503/0422
Valid: 01/04/2022 - 31/03/2027

hydro-int.com/patents

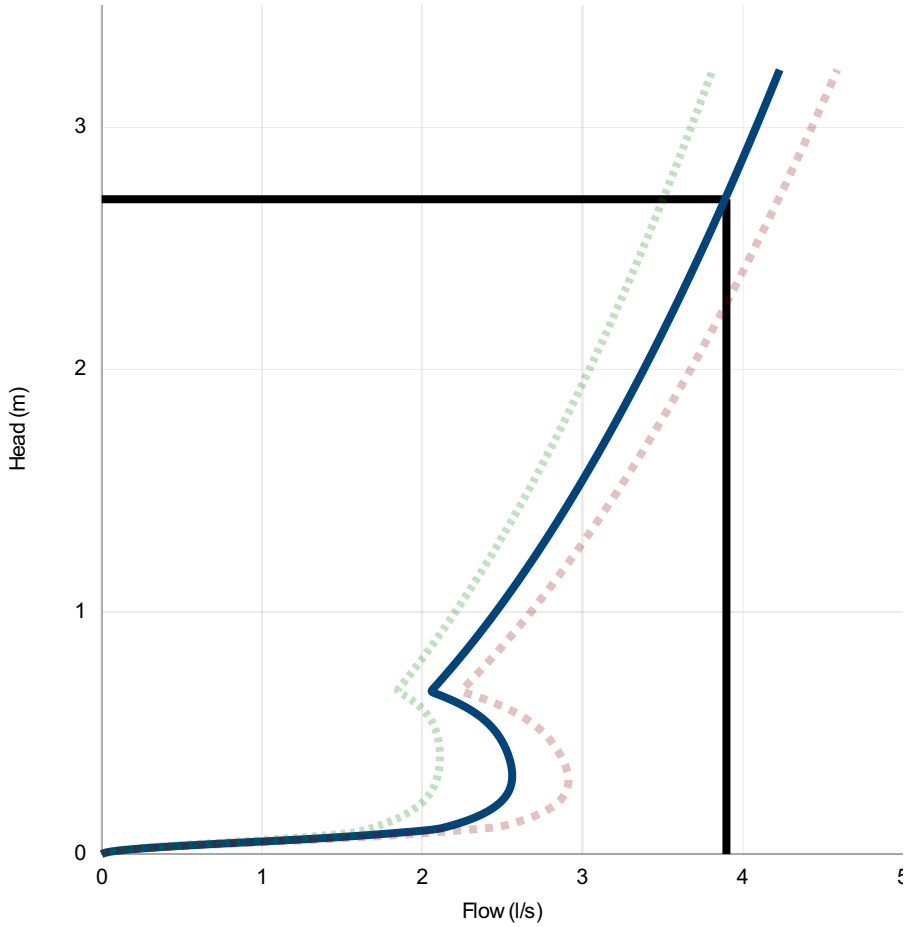

Head (m)	Flow (l/s)
0.000	0.000
0.093	1.945
0.186	2.434
0.279	2.553
0.372	2.554
0.466	2.499
0.559	2.379
0.652	2.124
0.745	2.154
0.838	2.272
0.931	2.383
1.024	2.489
1.117	2.590
1.210	2.687
1.303	2.779
1.397	2.869
1.490	2.955
1.583	3.039
1.676	3.120
1.769	3.199
1.862	3.275
1.955	3.350
2.048	3.423
2.141	3.494
2.234	3.564
2.328	3.632
2.421	3.698
2.514	3.764
2.607	3.828
2.700	3.891

DESIGN ADVICE

The head/flow characteristics of this SHE-0075-3900-2700-3900 Hydro-Brake® Optimum Flow Control are unique. Dynamic hydraulic modelling evaluates the full head/flow characteristic curve.

! **The use of any other flow control will invalidate any design based on this data and could constitute a flood risk.**

Hydro International
A CRH COMPANY

DATE	30/09/2024 15:21
Site	Yew Tree Road, Birchencliffe
DESIGNER	Michael Micklethwaite
Ref	22046

SHE-0075-3900-2700-3900

Hydro-Brake® Optimum

© 2024 Hydro International, Rivermead Court, Kenn Business Park, Windmill Road, Kenn, Clevedon, BS21 6FT. Tel 01275 878371 Fax 01275 874979 Web www.hydro-int.com Email designtools@hydro-int.com

Hydro International®
A CRH COMPANY

The **Hydro-Brake®** Flow Control Series

Hydro-Brake® Flood

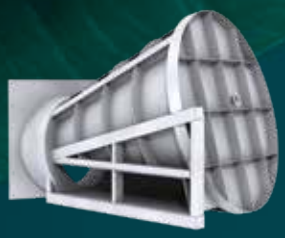

Hydro-Brake® Optimum

Hydro-Brake® Agile

Hydro-Brake® Orifice

The element of control

Turning Water Around®

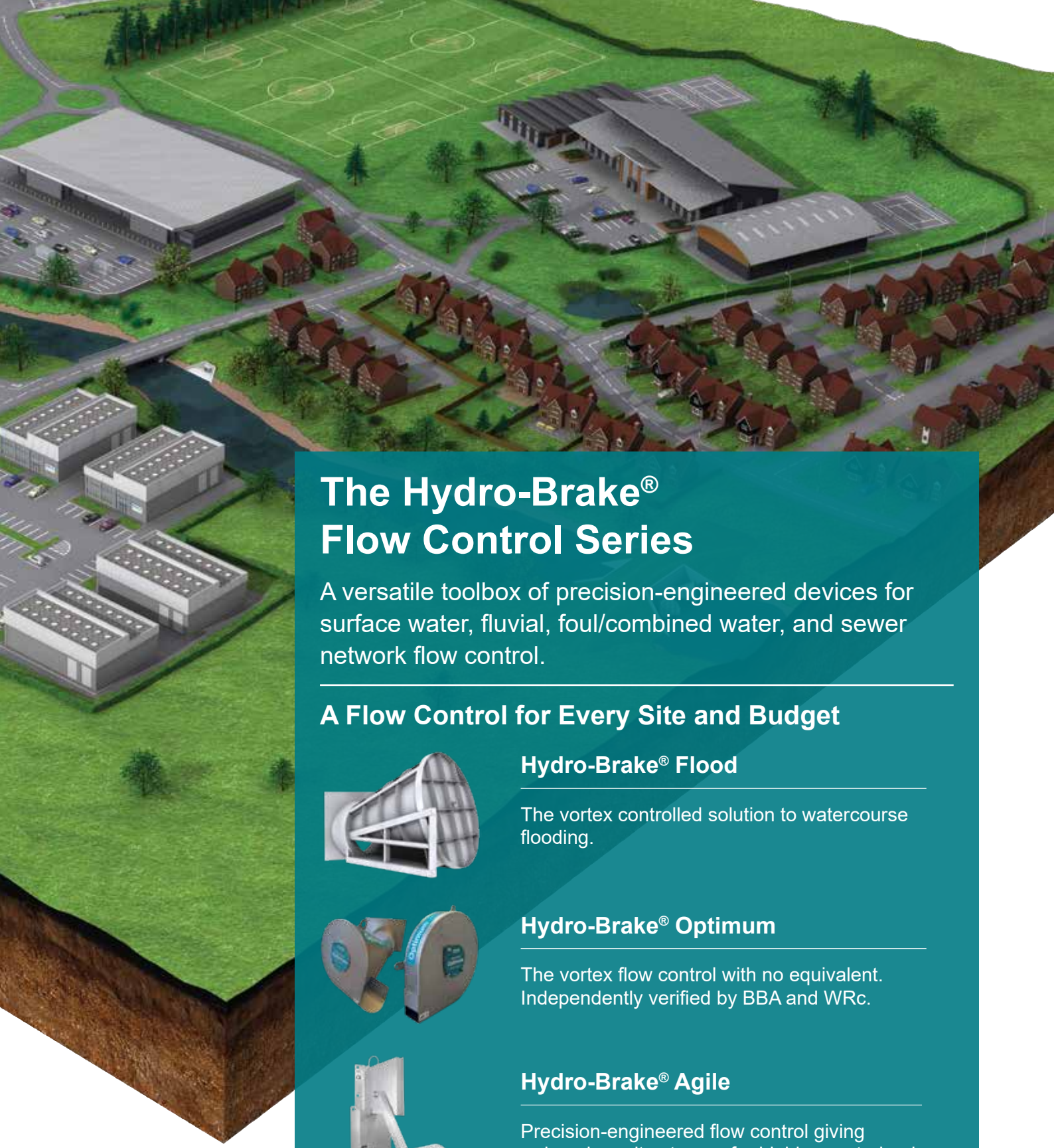

The Hydro-Brake® Flow Control Series

A versatile toolbox of precision-engineered devices for surface water, fluvial, foul/combined water, and sewer network flow control.

A Flow Control for Every Site and Budget

Hydro-Brake® Flood

The vortex controlled solution to watercourse flooding.

Hydro-Brake® Optimum

The vortex flow control with no equivalent. Independently verified by BBA and WRc.

Hydro-Brake® Agile

Precision-engineered flow control giving reduced on-site storage for highly constrained applications.

Hydro-Brake® Orifice

The low cost option for unconstrained sites.

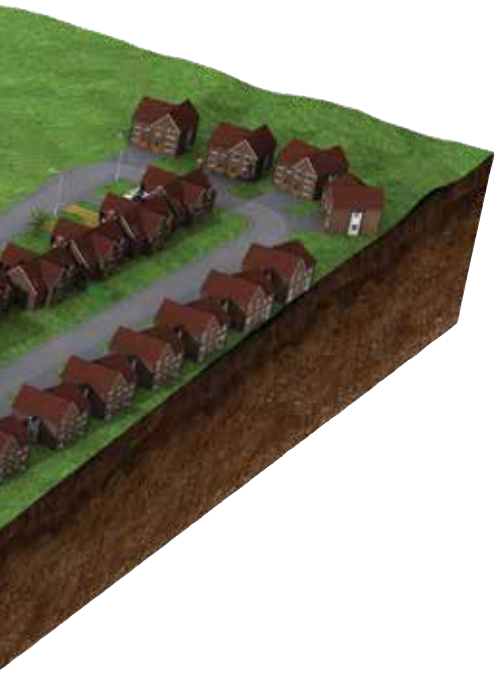

The Element of Control

Hydro International has set the highest standards in flow control technology during more than 40 years of specialist water engineering. When it comes to understanding, predicting and controlling the flow of water, Hydro works with scientific rigour.

Our customers are constantly challenged to deliver imaginative solutions, despite tough commercial and physical constraints. Committed to precision in product development and manufacture, we partner with you to engineer the best-possible water management solutions.

Hydro International's unrivalled knowledge and outstanding technical design support give our customers complete reassurance of system performance and value.

We give you the element of control.

Precision-Engineered for Reliable, Repeatable Performance

The Hydro-Brake® Flow Control Series offers a comprehensive choice for sustainable, performance-optimised attenuation and control whatever the project. Fully scalable and adaptable to your site conditions, there is no need to compromise on your project requirements.

All Hydro International flow controls are manufactured to the same exacting standards of quality. Tested, proven and independently accredited by regulatory bodies across the world, they offer the reassurance of reliable, repeatable performance.

Technical Design Support

Faced with increasingly varied environmental and planning stipulations, engineers need to adapt their solutions accordingly and balance flow rates with storage requirements and optimise the drainage system performance over the duration of a storm. In these circumstances, Hydro International's expert design support can advise on the correct flow control selection and design.

A full range of technical services, including detailed hydraulic modelling, easy-to-use design tools and integration into industry-standard software, all help engineers to achieve optimum hydraulic performance.

Buildable, Maintainable, Adoptable

Hydro International flow controls are designed and manufactured for ease of installation and reliable through-life performance with minimum intervention. Simple, predictable, low-maintenance regimes make them straightforward for management organisations to take on, and remove any concerns for adopting authorities.

For peace of mind and to make maintenance easier and more cost effective Hydro-Logic® Smart Maintenance can be added to any of our flow control chambers. This sophisticated sensor and telemetry package enables remote, monitoring of water levels and alerts will be triggered when abnormal water level activity is detected.

Hydro-Brake® Flood

Hydro-Brake® Flood is a highly sustainable, precision-engineered vortex technology for preventing watercourse flooding.

Hydro-Brake® Flood flow controls have been installed at the heart of low-maintenance, self-activating flood defences since the 1990s, and now protect more than 6,000 properties from an estimated £200m of flood damage in pioneering schemes across the UK.

Watercourse flood prevention

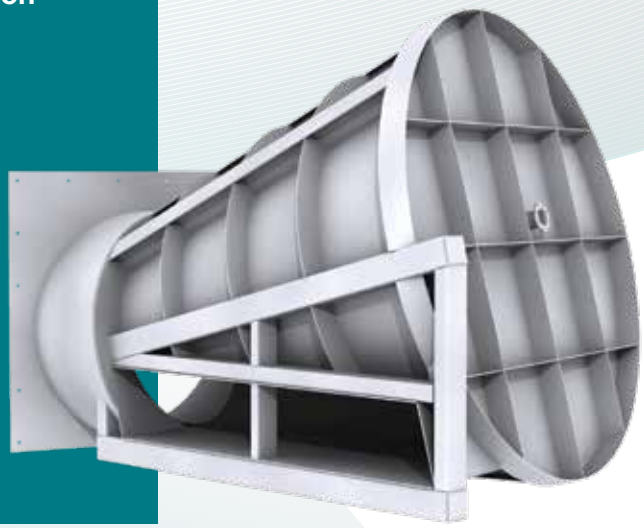

- ✓ No external power.
- ✓ No moving parts.
- ✓ Upstream flood storage minimised.
- ✓ Minimal maintenance.

Bespoke, Precision Engineering

Each Hydro-Brake® Flood is a bespoke solution that precisely manages watercourse flows, right up to major dams with pass forward flow rates of 30 m³/s. The same technology is used just as successfully in smaller, dispersed schemes.

Each Hydro-Brake® Flood scheme is purpose-designed to optimise flow control performance characteristics and precisely calculate the amount of upstream storage required. Using Hydro-Brake® Flood vortex technology can reduce the volume of floodwater to be stored by up to 30% compared to fixed orifice controls.

A Simple, Elegant Solution

The internal geometry of Hydro-Brake® Flood is designed so that water can flow through it without restriction for as long as possible, minimising the upstream storage required. A self-activating vortex is created when the water reaches the pre-determined hydraulic head, holding back excess water, and releasing it at a controlled rate.

Expert Design and Manufacture

Designing fluvial interventions, whether on a large or small scale, requires expert engineering and hydraulic modelling in line with the flood risk management strategy. Hydro International can support with detailed design using Computational Fluid Dynamics and structural design using Finite Element Analysis, scale testing and production of detailed design drawings and specifications.

Hydro-Brake® Flood vortex flow controls are manufactured in high-grade stainless steel to be structurally fit-for-purpose, using modern production and control methods to ensure the design and performance objectives are delivered.

Low Impact, Minimal Maintenance

The Hydro-Brake® Flood has a large open area at all flow rates, resulting in a low risk of blockages. With no power or moving parts, the flow controls require minimal operational attention and maintenance.

Future-Proofed

Hydro-Brake® Flood schemes can be designed to allow for future variances in fluvial flows. A facility for future adjustment to allow for climate change can be incorporated without necessitating new engineering or construction works.

Monitoring

Flood alleviation at the fluvial level can be demonstrated to deliver a level of protection that is worth far more than the project costs. We can offer support and advice on post-installation monitoring of the value of the intervention.

Case Studies

Flood Prevention Scheme Protects 1,750 Properties in Glasgow

Glasgow City Council's £53 m White Cart Water Flood Prevention scheme protects 1,750 properties in the south of the city. Normally a shallow river, White Cart Water is prone to flash flooding. As little as twelve hours of rain can cause water levels to rise by six metres.

New manufacturing and installation techniques were developed as part of the project that saw the world's five largest-ever Hydro-Brake® Flood vortex flow controls installed in 3 dams in the highlands above the city. The final scheme controls flow rates and velocities up to a 1 in 200 year flood event, with a 45% maximum reduction in peak flows, holding back more than 2.5 billion litres of floodwater in upstream storage areas that make best use of the natural environment.

Vortex Technology Protects Northallerton Homes and Businesses

In the North Yorkshire town of Northallerton, a £3.1 million flood alleviation scheme is using Hydro-Brake® Flood technology to protect 170 homes and businesses. Two large Hydro-Brake® Flood vortex flow controls were installed in refurbished culverts on town's outskirts.

They enable excess water to be held back in specially-built flood storage basins. Before the scheme was built, excess floodwaters could overtop the watercourse in the agricultural land on its approach to the culverts sending flows to cause flooding in the east of the town. Hydro International carefully-sized the flow controls to minimise upstream storage requirements.

Hydro-Brake® Flood Selection Criteria

Suitability:	For rivers & watercourses; Flood storage reservoirs		
Flow Range (l/s)	Head Range (m)	Ability to match greenfield discharge rate	On-site water storage requirement
550 – 12,000 *	1.5 – 10 *	n/a	Low
Moving Parts?	External Power?	Risk of blockage?	
No	No	Very low	

* higher flows and heads may be possible (contact Hydro International to discuss)

Hydro-Brake® Optimum

The Hydro-Brake® Optimum is Hydro International's flagship passive flow control device and the most advanced vortex flow control available.

Hydro-Brake® Optimum is the only vortex flow control for which the head and discharge relationship can be fine-tuned to optimise your design. Designers can size a Hydro-Brake® Optimum to achieve the perfect hydraulic performance curve and engineer the best possible passive flow control performance.

Surface water management and SuDS

Combined drainage systems and CSOs

Watercourse flood prevention

Sewer network optimisation

Wastewater treatment plants

- ✓ No external energy source.
- ✓ No moving parts.
- ✓ Future-proof.
- ✓ Large outlet clearances prevent blockages.

There is No Equivalent

Hydro-Brake® Optimum dispenses with the need to choose from a range of sizes and types and instead offers built-in flexibility to size each unit for absolute fit. Each Hydro-Brake® Optimum is individually-sized, so you achieve performance without compromise for every project.

Maximise Storage Savings

The increased hydraulic efficiency of the Hydro-Brake® Optimum means you can reduce on-site storage by up to 15% than if an alternative vortex control is used. With reduced storage, you can lower construction and excavation costs as well as saving project time and overall land-use.

Best Value for Every Project

Selecting the superior performance of Hydro-Brake® Optimum does not mean a higher cost for your project. On the contrary, because your upstream storage can be fine-tuned to achieve the smallest volumes, construction, excavation and material costs are reduced.

Easy to Install

Hydro-Brake® Optimum comes with a range of installation options and accessories to make construction and installation as simple as possible.

Setting the Standard

The Hydro-Brake® Optimum is the culmination of more than 40 years of research and development by Hydro International, and the company continues to take an international lead in vortex technology and expertise. Hydro-Brake® Optimum is the only vortex flow control to be independently certified by BBA and WRc for the control of stormwater or combined flows.

BBA APPROVAL INSPECTION TESTING CERTIFICATION
CERTIFICATE 08/4596

wrc approved

Minimal Maintenance

With up to 20% larger outlet clearances compared to other vortex devices, there is significantly less risk of blockage with a Hydro-Brake® Optimum. With no power source or moving parts, it offers minimal, predictable maintenance.

Future-Proofed

Standard, Hydraulically Efficient, Hydro-Brake® Optimum units are supplied with an adjustable inlet, allowing post-installation flow adjustments without the need to replace the whole device.

Flow Control Chamber

A Hydro-Brake® Optimum flow control can be supplied prefitted in a precast reinforced concrete chamber. Custom options including high level emergency bypass, rodding pipe and removable units are also available.

Case Studies

Tight Fit for New Homes

Engineers challenged to solve a “tight fit” surface water management challenge on a West Yorkshire housing development used the Hydro-Brake® Optimum Design Tool to calculate a solution that optimised the limited pipe storage area. Using conventional flow control devices would have required more back up storage than would fit in the space available, but by using Hydro-Brake® Optimum flood protection measures, challenging discharge limits were met for a 1 in 100 year storm.

‘Optimum’ Savings for Developer with 21st Century Drainage

The first phase of Edinburgh City Council’s 21st Century Homes project, the Gracemount development showcases sustainable construction. A major feature of the drainage solution is Hydro International’s high performance Hydro-Brake Optimum® to control surface water which saved the developers over 30% in storage construction costs.

Photo courtesy of Edinburgh City Council

Hydro-Brake® Optimum Selection Criteria

Suitability:	Most sites, from very low to very high flow rates		
Flow Range (l/s)	Head Range (m)	Ability to match greenfield discharge rate	On-site water storage requirement
0.7 – 550 *	0.4 – 4.0	Very good	Low
Moving Parts?	External Power?	Risk of blockage?	
No	No	Very low	

* lower flows may be possible (contact Hydro International to discuss)

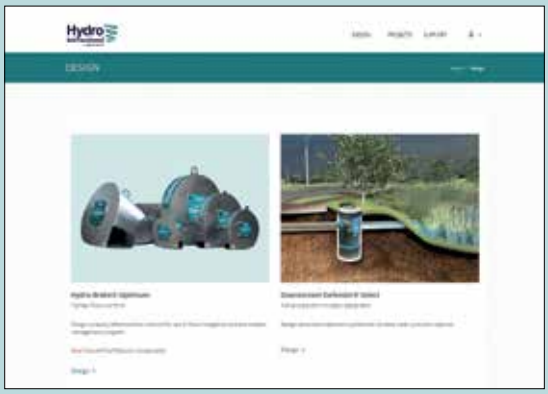

Explore the Options with our Online Design Tool

Our online design tool is a sizing engine that gives you the flexibility to compare flow control design options, output detailed design drawings and hydraulic data and import the results into commercially-available hydraulic modelling software.

The tool also has the option to design and customise our latest stormwater treatment separator, the Downstream Defender® Select.

hydro-int.design

Hydro-Brake® Agile

The Hydro-Brake® Agile flow control delivers precision engineering with best value for even the most constrained sites.

The Hydro-Brake® Agile flow control is a float-activated flow control that maintains a constant discharge to deliver precise performance over a wide range of heads. It is ideally suited to applications with constrained discharge requirements or where the flood storage area available through attenuation is very limited.

Surface water management and SuDS

Watercourse flood prevention

- ✓ No external energy source.
- ✓ Rapid drain-down provides resilience to subsequent rainfall events.
- ✓ Future-proof – simple adjustments possible for future changes in operating conditions.
- ✓ Repeatable, predictable maintenance regime.

Meet Stringent Discharge Consents

Designing flood storage, whether above or below ground, is dependent on the rate at which excess water can be controlled and discharged. The Hydro-Brake® Agile flow control is the only flow control design that achieves a constant rate of discharge and therefore the minimum possible upstream storage.

Whether controlling surface water on a housing development, or regulating flows in a wastewater treatment works, investment in a precision-engineered device can result in considerable savings in total project costs.

Sustainable Solution

The Hydro-Brake® Agile flow control provides sustainable control of flood storage without the need for external power sources or control circuits. Simple adjustments can be made to future-proof the device to allow for climate change.

Quality Manufacture

The Hydro-Brake® Agile flow control is precision-engineered using high-grade stainless steel with long-life, durable components and CE marked in accordance with the EU Machinery Directive (2006/42/EC). Manufactured in the UK, the flow control can be transported quickly to site to meet project timescales.

Easy to Install and Maintain

During dry weather periods, and especially during the first flush of a storm, the outlet area is at its largest, reducing the risk of blockages.

In the event of a blockage, an integrated release mechanism can be operated from surface level, enabling the gate to be fully opened and returned to its operating position.

Hydro-Brake® Agile Flow Control Chamber

The Hydro-Brake® Agile flow control can be supplied pre-fitted in a precast reinforced concrete chamber for quick and easy installation on site.

A range of outlet pipe sizes is also available to suit site requirements. Once lifted into position, the connecting pipework can be connected and a cover slab installed. To suit the location and invert required, the chamber depth can be easily varied with concrete rings.

Example Solutions

Constrained Space

For an urban in-fill housing project in a heavily-developed inner city area, the design team were keen to deliver an effective drainage strategy. However, there was limited space available, conflicting demands from new and existing services, and an existing drainage infrastructure with very limited capacity to accept additional flows.

Using a flow control that provided a near-constant discharge rate within the parameters of the available downstream capacity, the surface water was moved off-site as quickly and effectively as possible, enabling the on-site storage to be reduced to a level that could be accommodated in the heavily constrained space available.

Constant Discharge

Providing temporary flood storage through attenuation was the solution to a known surface water flooding problem. A flow control was needed to limit flow to the existing drainage network, with the excess rainwater overflowing into an off-line attenuation tank. Implementation costs had to be kept to an absolute minimum or the project may not have been feasible. In addition, any surcharge to the upstream drainage network would have moved flooding to a different part of the catchment.

A constant discharge flow control was therefore used to pass forward an appropriate amount of flow at all times, minimising pressure on the upstream network and only putting floodwater into the attenuation structure when absolutely necessary.

Hydro-Brake® Agile Selection Criteria

Suitability:	Constrained sites with stringent discharge consents		
Flow Range (l/s)	Head Range (m)	Ability to match greenfield discharge rate	On-site water storage requirement
4.5 – 100	0.4 – 2.4	Good	Very low
Moving Parts?	External Power?	Risk of blockage?	
Yes	No	Not suited to all sites	

Hydro-Brake® Orifice

The Hydro-Brake® Orifice delivers cost-effective, precise, repeatable flow control and is suitable for unconstrained sites with generous discharge consents

The Hydro-Brake® Orifice is a precision-cut orifice plate flow control, available in a broad range of configurations. A low-cost, low-complexity flow control, it is the ideal choice where there is minimal limitation on space available for on-site flood storage and attenuation, or where there are generous discharge consents.

Surface water management and SuDS

Watercourse flood prevention

Sewer network optimisation

Flexible and Versatile

Already trusted as part of Hydro International's family of precision-engineered flow control devices, the Hydro-Brake® Orifice can be designed and manufactured to meet a wide variety of configurations. With the Hydro-Brake® Orifice there is no need to compromise on your project needs.

Configured for Each Site

Each Hydro-Brake® Orifice is manufactured to suit the precise hydraulic requirements specified for the application. Our experienced professional engineering team will work with you to understand the needs of your site and recommend the best solution.

A wide variety of configurations and mounting options is available, for example integrated mesh guards, curve mount, pipe inserts and slide- or pivot-mounts. Hydro International can advise on sizing and flow rates and recommend the best solution for your site.

Quality Manufacture

The Hydro-Brake® Orifice is manufactured from high-grade stainless steel under strict Quality Assurance to the exacting methods and tolerances set out in the international standard BS EN ISO 5167-2: 2003.

Simple to Install

The Hydro-Brake® Orifice is simple to install. It can also be supplied pre-fitted in a precast reinforced concrete chamber for 'plug-and-play' installation on site.

Resilience by Design

The Hydro-Brake® Orifice can be supplied with integrated protection against the risk of blockages. Alternatively, the Hydro-Brake® Orifice can be mounted on moveable or removable structures to allow for manual intervention to drain the control chamber from surface level and clear any blockages that do occur.

Hydro-Brake® Orifice Selection Criteria

Suitability:	Unconstrained sites with generous discharge consents		
Flow Range (l/s)	Head Range (m)	Ability to match greenfield discharge rate	On-site water storage requirement
2.5 – 100 *	0.25 – 2.0 *	Not suited to all sites	Unconstrained
Moving Parts?	External Power?	Risk of blockage?	
No	No	Not suited to all sites	

* flows and heads may be possible outside of these ranges (contact Hydro International to discuss)

Hydro-Brake® Flow Control Series Selection Guide

The Hydro-Brake® Flow Control Series is a versatile toolbox for surface water, fluvial, foul water, and sewer network flow control. No matter what the site and budget, every flow control offers the same precision-engineered performance.

Features	Hydro-Brake® Flood	Hydro-Brake® Optimum	Hydro-Brake® Agile	Hydro-Brake® Orifice
Suitability	For watercourses; Flood storage reservoirs	Most sites, from very low to very high flow rates	Constrained sites with stringent discharge consents	Unconstrained sites with generous discharge consents
Flow Range (l/s) *	550 – 12,000	0.7 – 550	4.5 – 100	2.5 – 100
Head Range (m) *	1.5 – 10	0.4 – 4.0	0.4 – 2.4	0.25 – 2.0
Ability to Match Greenfield Discharge Rate	n/a	Very good	Good	Not suited to all sites
Moving Parts	No	No	Yes	No
Future Proof	Option that can be designed in	Adjustable inlet fitted as standard on Hydraulically Efficient units	No	No
External Power Requirement	No	No	No	No
Constant Discharge	No	No	Yes	No
On-site Storage	Low	Low	Very low	Unconstrained
Risk of Blockage	Very low	Very low	Not suited to all sites	Not suited to all sites

* flows and heads outside of these ranges may be possible (contact Hydro International to discuss)

Expert Design Support

No matter how big or small the project, Hydro International's professional engineers are on hand to provide free support to designers and specifiers to aid with the correct selection and configuration of Hydro flow controls for each project design.

Our dedicated design support team advises on best-practice sizing, flow and storage calculations for the Hydro-Brake® Flow Control Series within your surface water, fluvial, sewer or wastewater plant design.

Data, Insight and Analysis Services

Our Hydro-Logic® smart monitoring equipment provides a remote data collection capability that delivers real-world climate, water level, water flow and water quality data in near real time.

Documentation

Our dedicated design support team can assist with the output of hydraulic data to support your system design and dimensioned installation drawings, as well as advising on successful integration with other Hydro International water treatment and storage products.

Call the Hydro-Brake® Hotline 01275 337937 or email stormwater@hydro-int.com.

For Flow Control Product and Design Advice:

Tel: 01275 337937

Email: stormwater@hydro-int.com

Hydro-Brake® Flow Control Series

Unit 2
Rivermead Court
Kenn Business Park
Windmill Road
Kenn
Clevedon
BS21 6FT

Tel: **01275 878371**

hydro-int.com

Turning Water Around...®

Rev H/0924

APPENDIX C
FP McCANN Concrete Details

This document shall not be reproduced in whole or in part or relied upon by third parties for any use whatsoever without the written authority of F. P. McCann Ltd.

DO NOT SCALE, IF IN DOUBT PLEASE ASK.

Internal Wall Thickness (m)	External Wall Thickness (m)	Base Thickness (m)	Roof Slab Thickness (m)	Insitu Roof Thickness (m)	Internal Tank Dimensions Length (m)	Width (m)	Height (m)
0.275	0.250	0.250	0.120	0.120	30.9	6.099	1.9

n situ Roof Volume (m^3)	Insitu Base Volume (m^3)	Blinding Volume (m^3)	Total Insitu (m^3)	Insitu Rebar (tonnes)	Precast Weight (tonnes)	Storage Volume (m3)
23.7	44.6	17.6	85.8	4.7	203.0	346.22

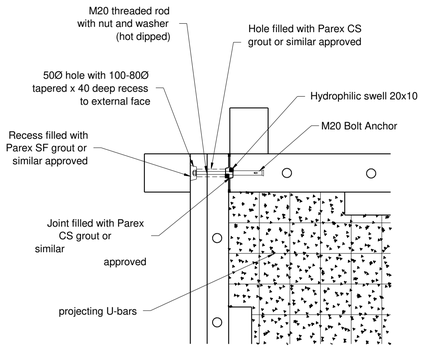

Detail A

External Wall Corner Connection

(1:20)

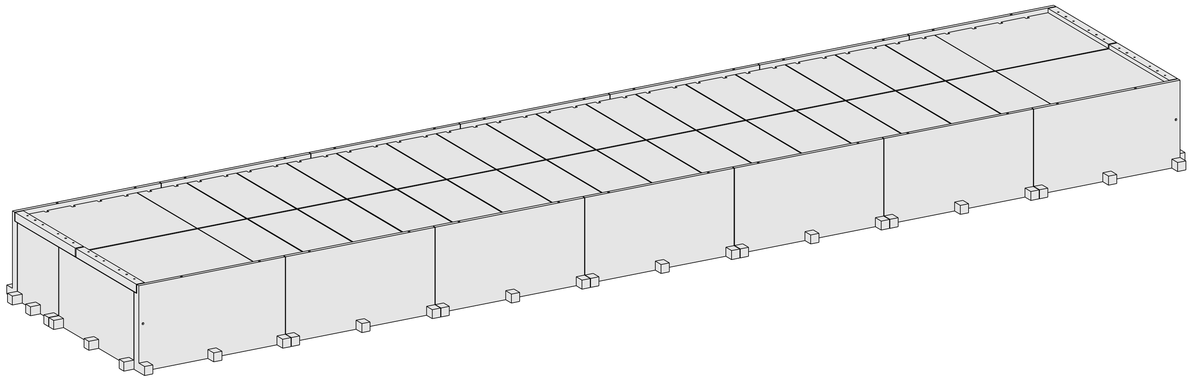

Excavation Requirements	
Length (m)	33.800
Width (m)	8.999
Height (m)	TBC

* Blinding to cover full extent of excavation
** Minimum dimensions at base of excavation

Precast Installation Program	
Estimated Duration	2 - 3 weeks

*** Duration of works is weather dependent

Unit Type:	Qty	Combined Weight(T)
Coverslab	36	59.6
External Wall	18	113.1
Internal Wall	7	30.3
	Total	203.0

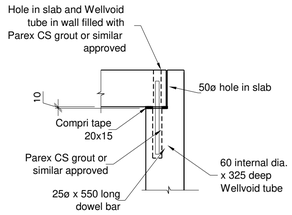

Detail B

Roof Slab to Wall Connection

(1:20)

Unit Ref:	Qty	Individual Weight (t)	Total Weight (t)
CU-0001	2	3.7	7.3
CU-0002	2	3.7	7.3
ET-0001	2	5.7	11.3
ET-0002	2	3.1	6.3
ET-0003	2	6.7	13.3
ET-0004	2	6.7	13.3
ET-1901	10	6.9	68.8
IT-1901	6	4.4	26.4
IT-1902	1	3.9	3.9
PS-0001	32	1.4	44.9
	Total		203.0

(Slabs not shown)

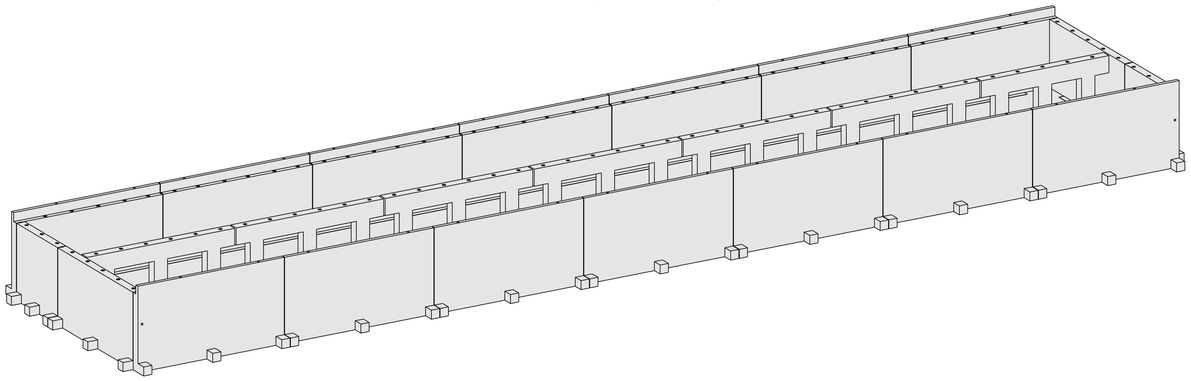

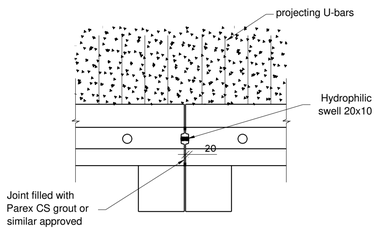

Detail C

External Wall Joint

(1:20)

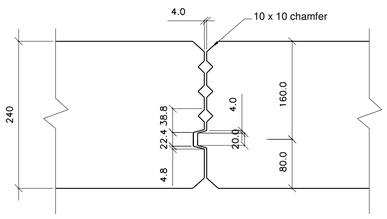

Detail D

Roof Panel Connection

(1:5)

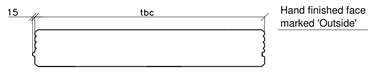

Typical Section Through Roof Panel

(1:20)

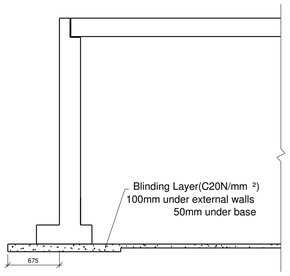

Blinding Layer

(1:40)

FP McCann Precast Tank Installation Guide:

https://www.youtube.com/watch?v=yuEKwqdGjJw&feature=youtu.be

The Construction (Design & Management) Regulations 2015
a) If you are unsure about your responsibilities please refer to the HSE Website.
b) The notes below and design details (5) should be read by all CDM duty holders alongside the Tank layout, section details and additional notes.
Potential hazard/ risks are identified and should be assessed accordingly by the main contractor and his design team prior to any site works commencing.
c) The FP McCann GA should be read in conjunction with all other relevant drawings from the contract design team e.g. Engineers, M&E sub-contractors.
Installation
The units should be lifted using only the lifting equipment noted in (1), all elements must be lifted with the installation method (RAMS) provided by FP McCann.
Bearings
It is the responsibility of the overall scheme designer to ensure that the bearings provided are structurally adequate in both temporary and final condition, for the support of the precast units, please also refer to the sections on the GA. Applied bearing pressure due to ULS/SLS load conditions shown in structural calculations.
Voids & Openings
Where pre-formed voids and holes are provided, suitable edge protection or temporary cover should be supplied, installed and maintained by others. The provision and installation of cover, frames and any insitu pipe connections are to be by others.
Dry Weather Flow
To be added as requested by relevant Water Authority.

1. Handling "Hazard"

a) Volume/ Weight (based on a concrete density of 2.5 t/m^3):
See individual unit drawings - (+5% is recommended for sizing lifting equipment)
b) All lifting points shall be used as specified.
c) Also refer to Lifting & handling Instructions Diagram on Drawing
d) Anchor Recesses to be filled by others on site
e) Site Lifting: Spherical-Head Clutch fitted to spherical head anchor
f) Site Lifting: Rotating Clutch fitted to wavy tail anchor (200mm wall)
g) Refer to individual unit drawings for anchor quantities and setting out.
h) In the design of the lifting anchors, we have adopted a Dynamic Factor = 1.3 (Stationary Crane/Mobile Crane, (Hoisting speed >90m/min).

2. Concrete (Precast)

a) Lifting strength based on 2 cubes = 25N/mm2.
b) Characteristic 28 day cube strength = 50N/mm2.

3. Reinforcement

a) Reinforcement (500B or C) to BS4449.
b) Scheduling, dimensioning, bending and cutting to BS8666.
c) Cage to be tack welded and/ or tied with 17 gauge annealed tying wire.

4. Manufacture

a) Manufactured to BS EN 13369:2013
b) Tolerances to BS EN 13369:2013 & BS EN 13670:2009
c) Finishes as indicated below unless otherwise detailed on unit;
- Top (As Cast) Surface: *Steel Trowelled*
- Front Face & Sides (Struck from Steel/ Timber Mould): *Type A*
d) Prestressed or reinforced roof slabs used as required

5. Installation

a) Refer to site specific installation guide.

6. Sealing

a) As shown on General Arrangement drawing.

7. Insitu-Concrete

a) Min. required characteristic 28 day cube strength = 37N/mm^2.
b) Concrete mix specification to incorporate min. cement content = 360kg/m^3 max, w/c ratio = 0.45 and material specification to achieve class DC2.

8. Temporary Works

a) FP McCann are responsible for the temporary works associated with the erection of the precast only. All temporary works design to be by others.
b) The main contractor is responsible for the provision of required temporary works to ensure a stable excavation is maintained for the full period of the tank installation.
c) Due consideration is required with regard to the nature of the backfill and type/ size of plant used.
d) Protection of precast units during temporary works (backfilling) is the responsibility of others.
e) Any plant used for backfilling or subsequent works, around or over tank, should be suitably sized to ensure that the net applied loads are no greater than the permanent design loads.
f) Any temporary works should be designed/ installed/ removed to ensure that the net applied loads are no greater than the permanent design loads.

9. Design

a) Water Tightness: Class 1 to BS EN 1992-3
b) Refer to Design calculations for details.

Rev	Date	Revision Detail	By	Chk	App
P01	29-04-25	Initial Drawing	TSP		

Status: Suitable for Costing
Suitability: D1

FP McCann
3 Drumard Road,
Knocklougrim,
Magherafelt,
BT45 8QA
Tel: +44 (0)28 7964 2558
www.fpmccann.co.uk

Client.
-

Project.
Yew Tree Road
Huddersfield

Title.
General Arrangement of
StormTank MPS
30.9 x 6.1 x 1.9 m

Drawn: TSP	Checked:	Approved:
Internal Ref: 195530	Date: 29-04-25	Scale: NTS
Drawing No : YEW -FPM-ZZ-XX-DR-X-0001		Rev: P01

Unit 6
Benton Office Park
Bennett Avenue
Horbury, Wakefield
West Yorkshire
WF4 5RA
01924 654108
mail@advantengineers.co.uk
www.advantengineers.co.uk