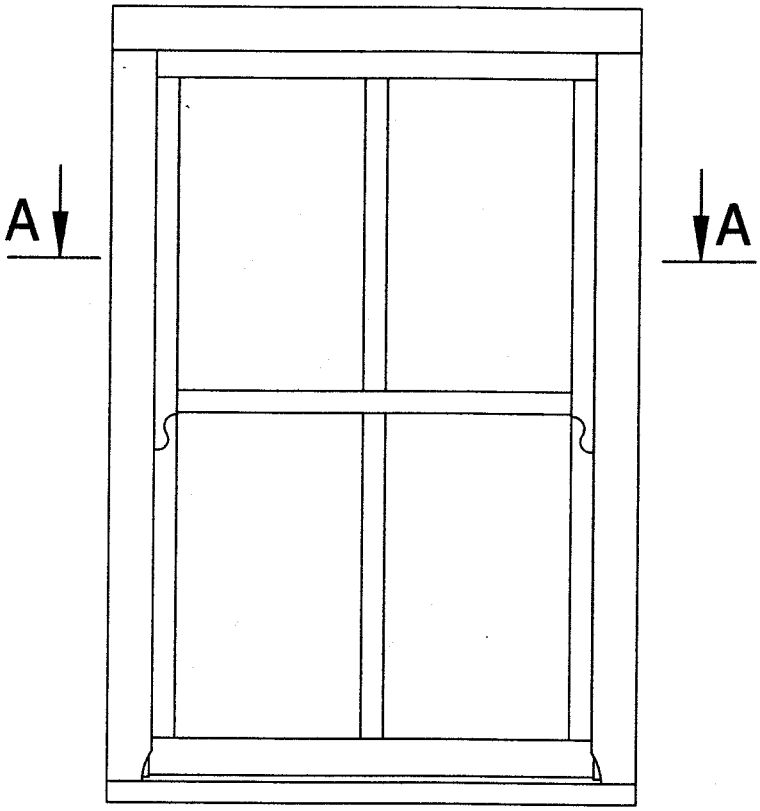

ELEVATION 1,50

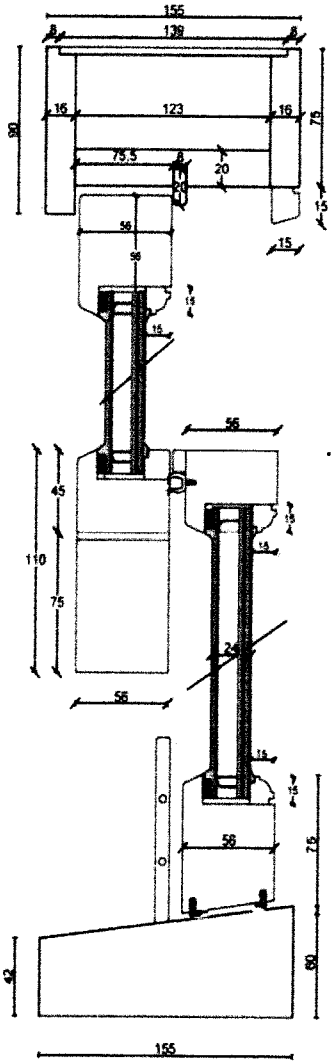

SECTION 1.10

A-A

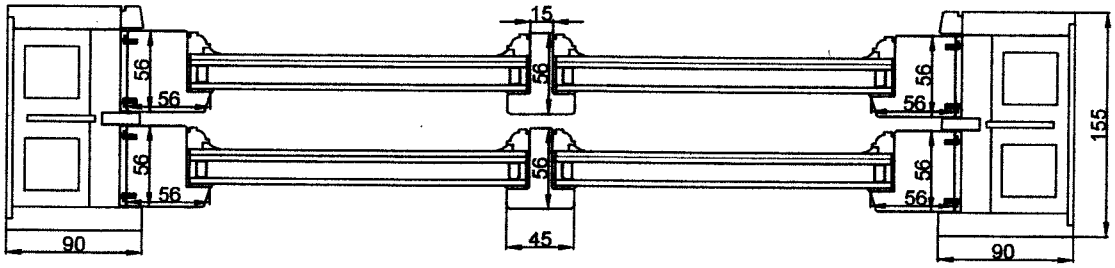

PLAN 1.10

PROPOSED TIMBER WINDOWS