For Information Only

FRONT ELEVATION

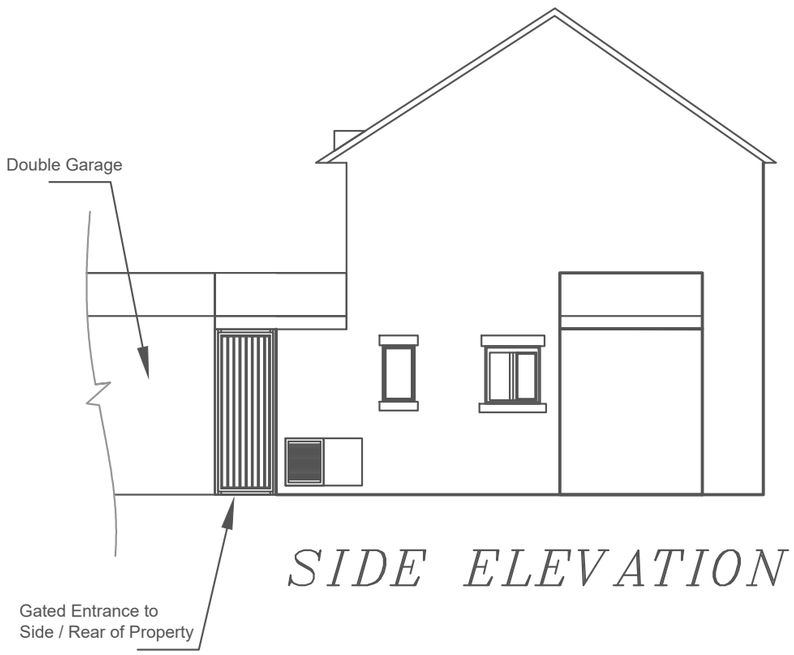

SIDE ELEVATION

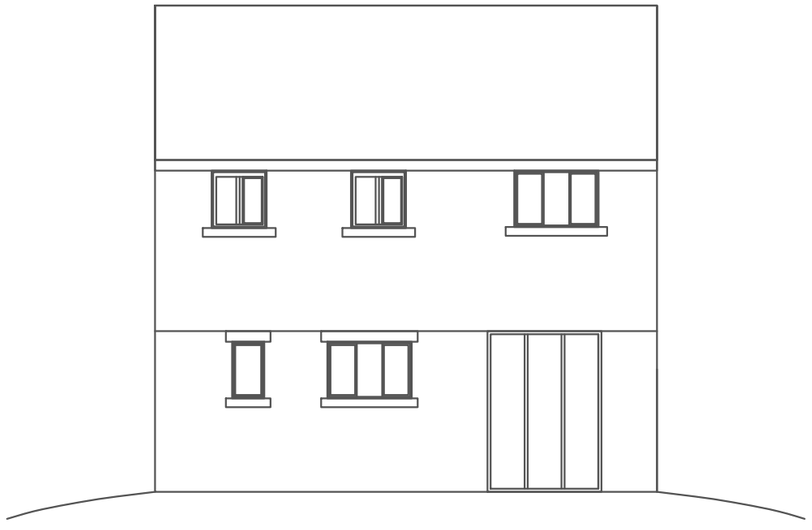

REAR ELEVATION

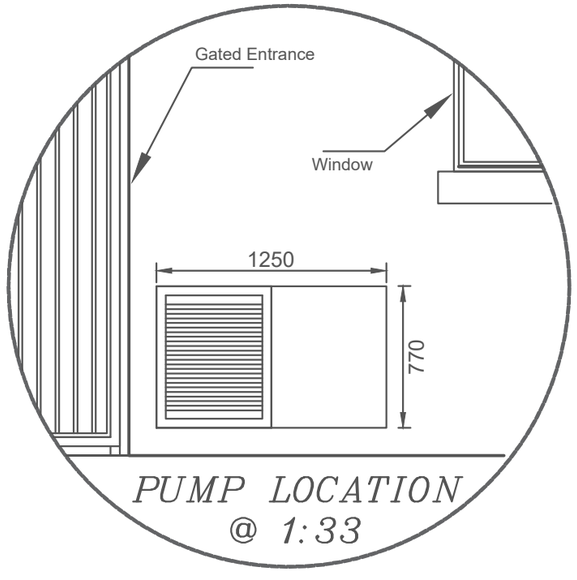

PUMP LOCATION
@ 1:33

DRAWINGS BY
SNOWDEN

NO.	DATE	REVISION	BY

Drawing Title :

47 Howard Way
Elevations

JOB NO HD9 4NW	DRAWN BY RS
SCALE 1:100 @ A3	DATE 04/12/23
DWG NO 47HW_EL001	
SHEET NO 1 of 1	