THIRD ANGLE PROJECTION

REMOVE ALL BURRS AND SHARP EDGES
DO NOT SCALE
IF IN DOUBT - ASK

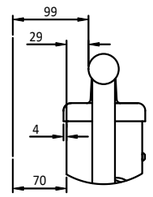

View of handrail section

Unless otherwise instructed lift power supply and transformer should be fitted as indicated in drawing LR00 7000 Sheet 3.

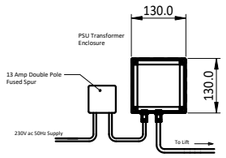

ELECTRICAL DATA TABLE

Supply	Nominal Current	Consumer Unit Fuse Rating	Control Switch		Dedicated Supply?	RCD	Comments
			Rating	B.S.			
230v 50Hz Single Phase & Neutral	1A	6A	13A DP Fused Switch. Fused at 3A.	5733	No	Yes	May be wired either from adjacent ring main from fused spur or with a 13A plug, fused at 3A into ring main.

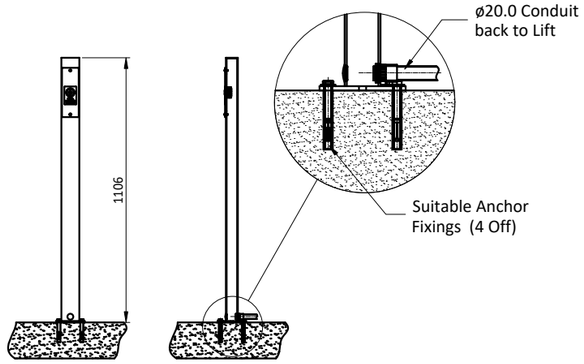

POST MOUNTED CALL STATION DETAILS

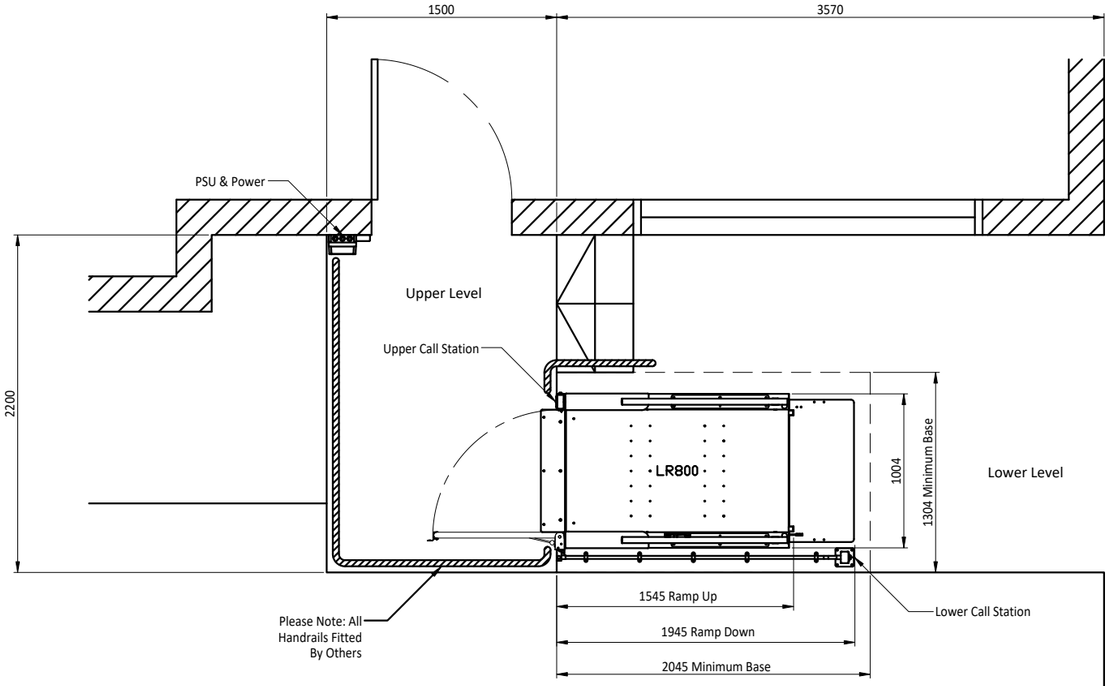

PART PLAN VIEW

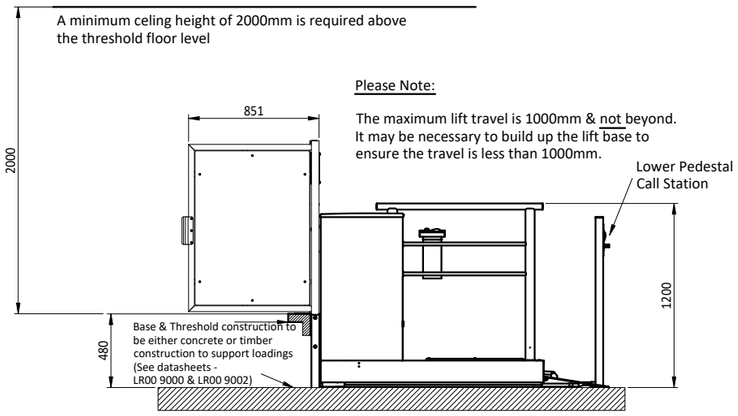

Please Note:

The maximum lift travel is 1000mm & not beyond.
It may be necessary to build up the lift base to ensure the travel is less than 1000mm.

VIEW ON SIDE OF LIFT

BASIC LIFT DATA

- Model: LR800 (Steplift)
- Rated Load (SWL): 300kg
- Lift Travel: 480 mm
- Lift Speed: 20mm/sec
- Ramp Gradient: 1:6
- Lift Colour: Bleu Sable

COMPLIANCE

- Lift Complies to the EHSR of Directive 2006/42/EC
- Lift complies to BS 6440:2011

CLIENT TO PROVIDE

1. 230V 50Hz Single Phase Supply
2. Adequate Lighting for landing entrances.

NOTES

It is recommended that the lift unit (where practicable) be positioned central to steps and or door opening.

An Upper gate is recommended when the rise height exceeds 500mm (Domestic Access) or where Risk Assessment indicates otherwise.

1500mm Access recommended at upper and lower levels to allow for wheelchair turning circles.

A Minimum of 2000mm is required above the threshold floor level.

Lift Clearances Recommended by BS6440: 2011

Adjacent surfaces greater than 10mm and less than 100mm from the carrier shall have a sensitive edge, photo cell or light curtain located along any affected sides.

Note: There is a risk of crushing if the part of the structure is less than 100mm to an adjacent surface.

Adjacent surfaces greater than 100mm and less than 300mm from the carrier which do not form a continuous surface, shall have a sensitive edge, photo cell or light curtain along any affected sides.

Please note we do not recommend the LR is fitted any closer than 70mm to any continuous vertical adjacent surface.
This is to comply with BS6440 2011 recommendations on handrail clearances.

Side panel full infills are available, these can overcome certain hazards. Eg..Dwarf walls at the ground floor, which are below 1200mm high

Each site presents different risks, these must be assessed and addressed accordingly.

ELECTRICAL DATA

PSU Box (130 x 130 x 100)
Lighting Electrical Supply to be independent of Lift power Supply

BUILDERS NOTES

Base construction to be of concrete construction to support loadings (See drawing LR00 9000 & LR00 9002)

SPECIAL REQUIREMENTS/NOTES

- Upper Call Station - Gate Mounted Std & Key/Sw
- Lower Call Station - Post Mounted Std & Key/Sw
- Upper Gate Steel Infill R/H - 800 mm

ISS	ALTERATION	INTLS & DATE
A	INITIAL ISSUE	A.P. 27.09.23

Wessex Lifts

SCALE		ALL DIMENSIONS IN mm UNLESS OTHERWISE STATED AND DRAWN TO BS 8888			
DRN A.P.	DATE 27.09.23	TOLERANCES: UNLESS OTHERWISE STATED			ANGULAR ±0.5°
CHKD D.S.M.	DATE 27.09.23	X	X.X	X.XX	HOLE SIZES TO BS4500 H11 U.O.S.
APPD	DATE	±1.0	±0.25	±0.13	THREAD ISO COARSE CLASS 6

THIS DRAWING IS THE PROPERTY OF WESSEX LIFTS CO LTD AND MAY NOT BE PUBLISHED, REPRODUCED OR USED FOR MANUFACTURE WITHOUT THE EXPRESS PERMISSION OF THE OWNERS IN WRITING

FINISH:

DESCRIPTION

PROPOSED ARRANGMENT OF EXTERNAL STEPLIFT (LR800) AT 63 TOM LANE, HD4 5QQ

DRAWING No.

10318

SHEET 1 OF 1 SHTS