PLANNING STATEMENT

Proposed Solar Layout to Bay 9, 10, 11, 12 and OB2.

At

Cummins Turbo Technologies

St Andrews Road, Huddersfield

HD1 6RA

Farrar Bamforth Associates Ltd

Architectural Consultants

farrarbamforth.co.uk

Farrar
Bamforth
Architecture

June 2023 – 23C08

Farrar
Bamforth
Architecture

[1] INTRODUCTION

1.1 This Planning statement has been prepared on behalf of Cummins Turbo Technologies in support of a Prior Approval: Roof mounted solar PV on non-domestic building to Kirklees Council, seeking approval for the installation of Solar Panels to numerous existing roofs at Cummins Turbo Technologies, St Andrews Road, Huddersfield.

1.2 This statement describes the matters considered in the design of the scheme and the preparation of the prior approval / lawful development certificate application including justification for the permitted development from the GPDO.

1.3 This statement should be read in conjunction with the drawings and other associated supporting documents.

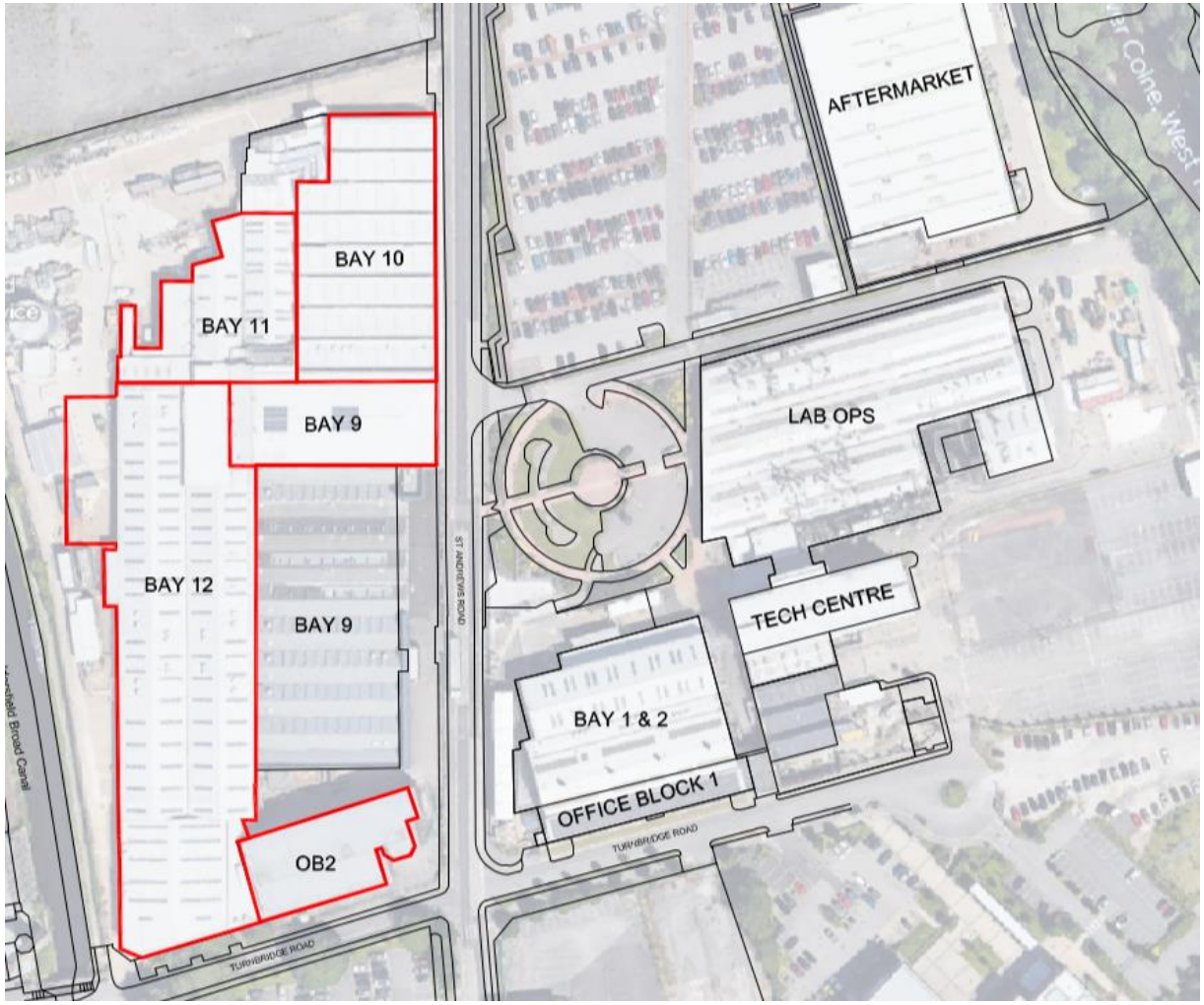

Aerial Photo of Site

= Area of proposed solar panels

Farrar
Bamforth
Architecture

[2] LOCATION

2.1 The site is located on either side of St Andrews Road. The site is 1.4 miles from Huddersfield Town Centre.

2.2 The site predominantly is an aftermarket parts supply and turbocharger manufacturing plant with associated offices.

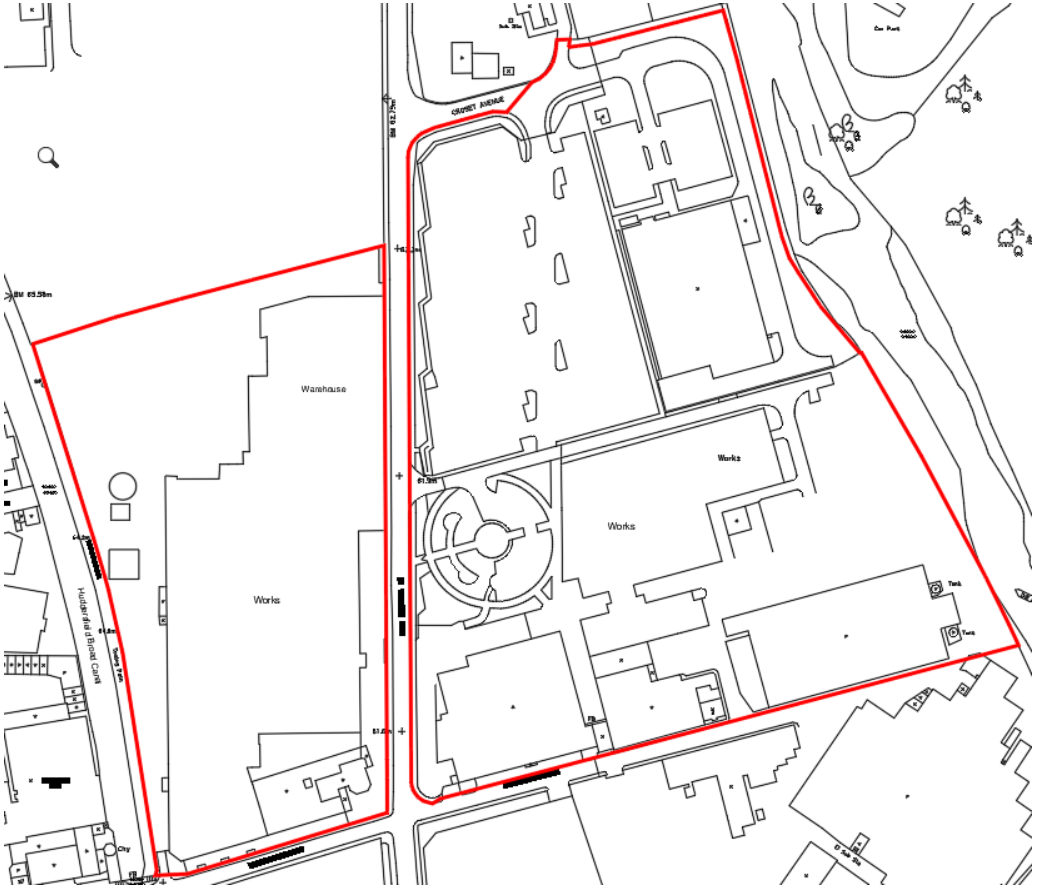

Location Plan

Farrar
Bamforth
Architecture

[3] CONTEXT

3.1 OB2, Bay 9, 10, 11 and 12 are located on the Western side of the Cummins TT site.

3.2 Currently, only Office Block 1 roof has Solar PV Panels fitted in a 4 x 64 panel cluster, with a power of 48.64kWP.

Aerial view of Cummins Turbo Technologies Ltd. Huddersfield

Farrar
Bamforth
Architecture

[5] PROPOSAL

5.1 The proposal is for approximately 1932 Solar PV Panels to be fitted to existing roofs.

5.2 The existing roofs where solar panels are to be installed are as per drawing ref: 23C08-4700 including Bay 9, 10, 11, 12 and OB2.

5.3 This solar install proposal will provide a total new power of 886.14kWP, making the total power onsite 934.78kWP.

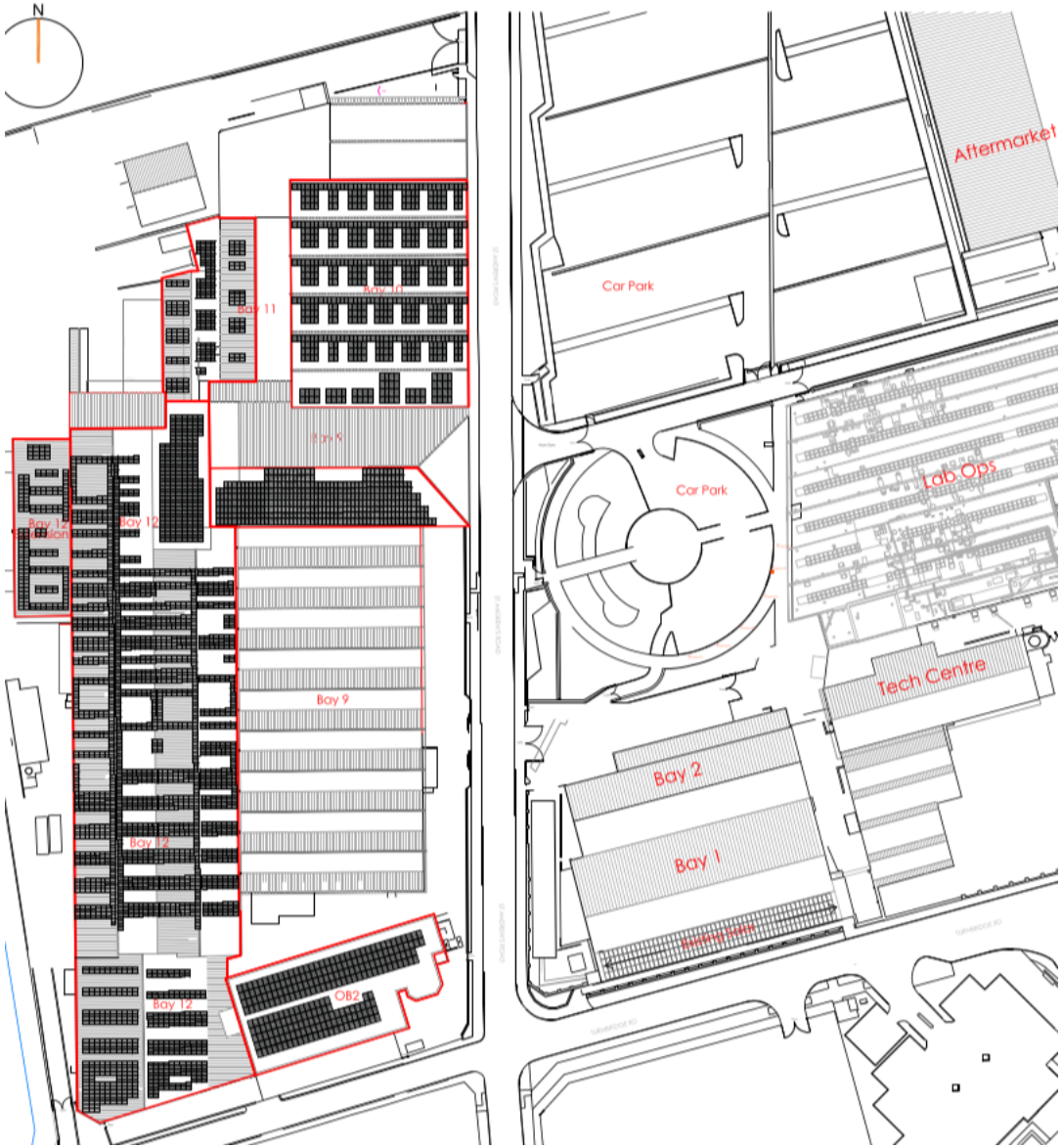

Proposed Site Solar Works

Farrar
Bamforth
Architecture

[6] LAYOUT, SCALE & APPEARANCE

6.1 The Solar PV panels to be installed across the site are JAM54S30 390-415/MR. They will be arranged into a layout which will fit the different roof shapes, sizes, roof lights and existing services.

6.2 The panels will be fixed onto three different framing systems depending on the roof type:

- FlatFix Fusion mounting system - for flat roofs for solar panels in a dual landscape setup
- Manual ClickFit EVO mounting system - for solar panels on metal sheet roofing, in a landscape and or portrait orientation.

6.3 The total proposed area of Solar Panels is 3772.8m²

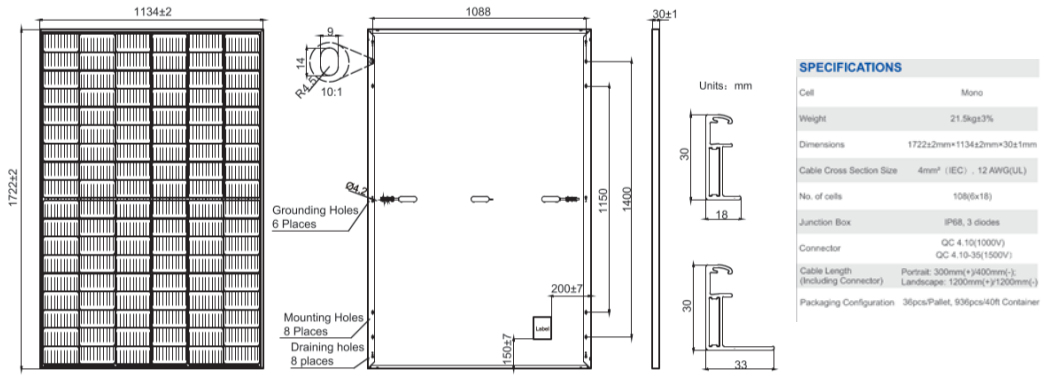

JAM54S30 390-415/MR PV Panels

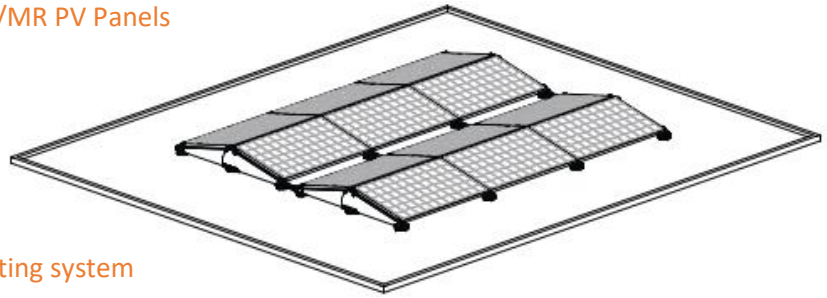

FlatFix Fusion mounting system

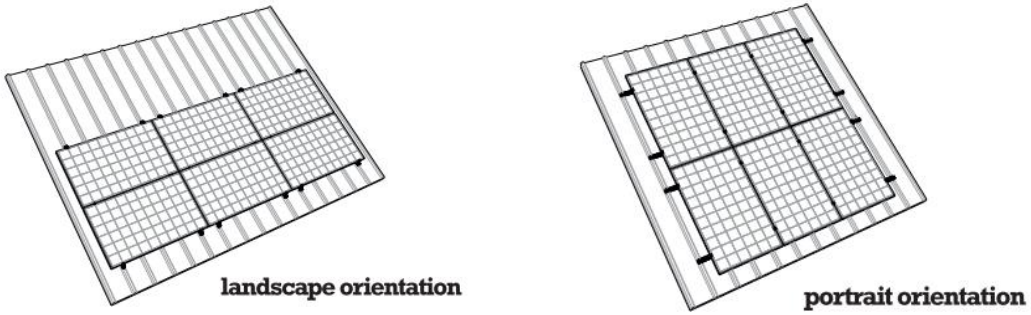

ClickFit EVO mounting system

Farrar
Bamforth
Architecture

[7] PERMITTED DEVELOPMENT

It is considered that this proposal constitutes Permitted Development under Schedule 2, Part 14, Class J of the Town and County Planning (General Permitted Development) (England) Order 2015 being installation or alteration etc. of solar equipment on non-domestic premises for the following reasons (direct extract from GPDO):

Permitted development

J. *The installation, alteration or replacement of—*

(a)*microgeneration solar thermal equipment on a building;*

(b)*microgeneration solar PV equipment on a building; or*

(c)*other solar PV equipment on the roof of a building,*

other than a dwellinghouse or a block of flats.

The proposal is for the installation of solar PV equipment on the roof of a commercial / industrial building

Development not permitted

J.1 Development is not permitted by Class J if—

(a)the solar PV equipment or solar thermal equipment would be installed on a pitched roof and would protrude more than 0.2 metres beyond the plane of the roof slope when measured from the perpendicular with the external surface of the roof slope;

All panels to be installed on a pitched roof will not protrude more than 200mm from the plane of the existing roof slope.

(b)the solar PV equipment or solar thermal equipment would be installed on a flat roof, where the highest part of the solar PV equipment would be higher than 1 metre above the highest part of the roof (excluding any chimney);
All panels to be installed on a flat roof (OB2) the panels will be no higher than 1m above the existing roof (Estimated to be 330mm from the face of the existing roof. Existing parapet 310mm high)

(c)the solar PV equipment or solar thermal equipment would be installed within 1 metre of the external edge of that roof;
All panels to be installed more than 1m in from the external edge of the existing roof.

(d)in the case of a building on article 2(3) land, the solar PV equipment or solar thermal equipment would be installed on a roof slope which fronts a highway;
The proposed solar installation in not on designated land (article 2(3))

(e)the solar PV equipment or solar thermal equipment would be installed on a site designated as a scheduled monument; or
The proposed solar installation in not on a designated scheduled monument.

(f)the solar PV equipment or solar thermal equipment would be installed on a listed building or on a building within the curtilage of a listed building.
The proposed solar installation in not on a listed building or within the curtilage of a listed building.

J.2 Development is not permitted by Class J(a) or (b) if—

(a)the solar PV equipment or solar thermal equipment would be installed on a wall and would protrude more than 0.2 metres beyond the plane of the wall when measured from the perpendicular with the external surface of the wall;
All panels to be installed on a pitched roof and not a wall

(b)the solar PV equipment or solar thermal equipment would be installed on a wall and within 1 metre of a junction of that wall with another wall or with the roof of the building; or

All panels to be installed on a pitched roof and not a wall

(c)in the case of a building on article 2(3) land, the solar PV equipment or solar thermal equipment would be installed on a wall which fronts a highway.

All panels to be installed on a pitched roof and not a wall

J.3 Development is not permitted by Class J(c) if the capacity of the solar PV equipment installed (together with any solar PV equipment installed under Class J(b)) to generate electricity exceeds 1 megawatt.

The proposal to generate electricity will not exceed 1 megawatt. Total power within proposals = 934.78kWP.

Conditions

J.4—(1) Class J development is permitted subject to the following conditions—

(a)the solar PV equipment or solar thermal equipment must, so far as practicable, be sited so as to minimise its effect on the external appearance of the building and the amenity of the area; and

All panels are to be sited so as to minimise the effect on the external appearance of the existing buildings and the amenity of the area.

(b)the solar PV equipment or solar thermal equipment is removed as soon as reasonably practicable when no longer needed.

The solar PV equipment will be removed as soon as reasonably practicable when no longer needed.

(2) Class J(c) development is permitted subject to the condition that before beginning the development the developer must apply to the local planning authority for a determination as to whether the prior approval of the authority will be required as to the design or external appearance of the development, in particular the impact of glare on occupiers of neighbouring land, and the following sub-paragraphs apply in relation to that application.

Prior Approval application to be submitted

(3) The application must be accompanied by—

(a)a written description of the proposed development;

(b)a plan indicating the site and showing the proposed development;

(c)the developer's contact address; and

(d)the developer's email address if the developer is content to receive communications electronically;

together with any fee required to be paid.

(4) The local planning authority may refuse an application where, in the opinion of the authority—

(a)the proposed development does not comply with, or

(b)the developer has provided insufficient information to enable the authority to establish whether the proposed development complies with,

any conditions, limitations or restrictions specified in Class J applicable to the development in question.

(5) Sub-paragraphs (6) and (8) do not apply where a local planning authority refuses an application under sub-paragraph (4) and for the purposes of section 78 (appeals) of the Act such a refusal is to be treated as a refusal of an application for approval.

(6) The local planning authority must give notice of the proposed development—

(a)by site display in at least one place on or near the land to which the application relates for not less than 21 days of a notice which—

(i)describes the proposed development;

(ii)provides the address of the proposed development;

(iii)specifies the date by which representations are to be received by the local planning authority; or

(b)by serving a notice in that form on any adjoining owner or occupier.

(7) The local planning authority may require the developer to submit such information as the authority may reasonably require in order to determine the application.

(8) The local planning authority must, when determining an application—

(a)take into account any representations made to them as a result of any notice given under sub-paragraph (6); and

(b)have regard to the National Planning Policy Framework issued by the Department for Communities and Local Government in March 2012(**1**), so far as relevant to the subject matter of the prior approval, as if the application were a planning application.

(9) The development must not begin before the occurrence of one of the following—

(a)the receipt by the applicant from the local planning authority of a written notice of their determination that such prior approval is not required;

(b)the receipt by the applicant from the local planning authority of a written notice giving their prior approval; or

(c)the expiry of 56 days following the date on which the application under sub-paragraph (3) was received by the local planning authority without the authority notifying the applicant as to whether prior approval is given or refused.

(10) The development must be carried out—

(a)where prior approval is required, in accordance with the details approved by the local planning authority;

(b)where prior approval is not required, or where sub-paragraph (9)(c) applies, in accordance with the details provided in the application referred to in sub-paragraph (3),

unless the local planning authority and the developer agree otherwise in writing.

(11) The local planning authority may grant prior approval unconditionally or subject to conditions reasonably related to the subject matter of the prior approval.