FALCOSAIL CYCLE SHELTER

The FalcoSail is a design led product and from any angle the likeness of a sail ship is unmistakable, making the shelter a very attractive addition for any purpose including a cycle shelter, waiting shelter or smoking shelter.

With 3m, 4m and 5m options, there is great scope to extend this shelter which can hold upwards of 8 cycles in an impressive design led solution. Like all Falco shelters, the FalcoSail is modular in design enabling a shelter to be built up to house any number of cycles in various combinations. As with the FalcoLite and FalcoQuarter it is possible to create a 'combi' style of compound or walkway by placing bays of FalcoSail facing each other.

The use of a walkway cover and lockable gates between the bays ensures a weatherproof space for housing; cycles, pushchairs, motorcycles or practically anything else.

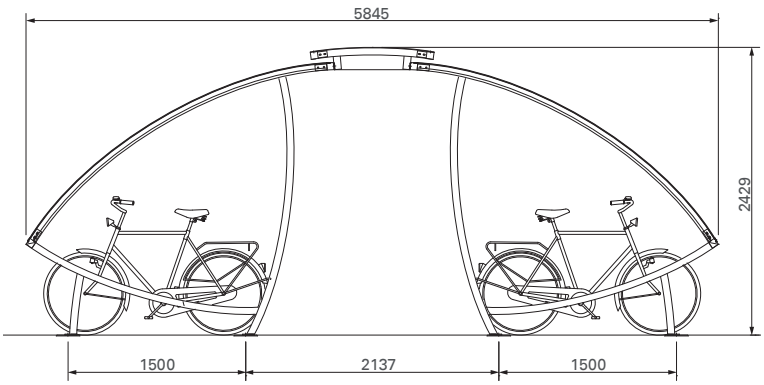

FalcoSail with walkway cover