H-3-264-952

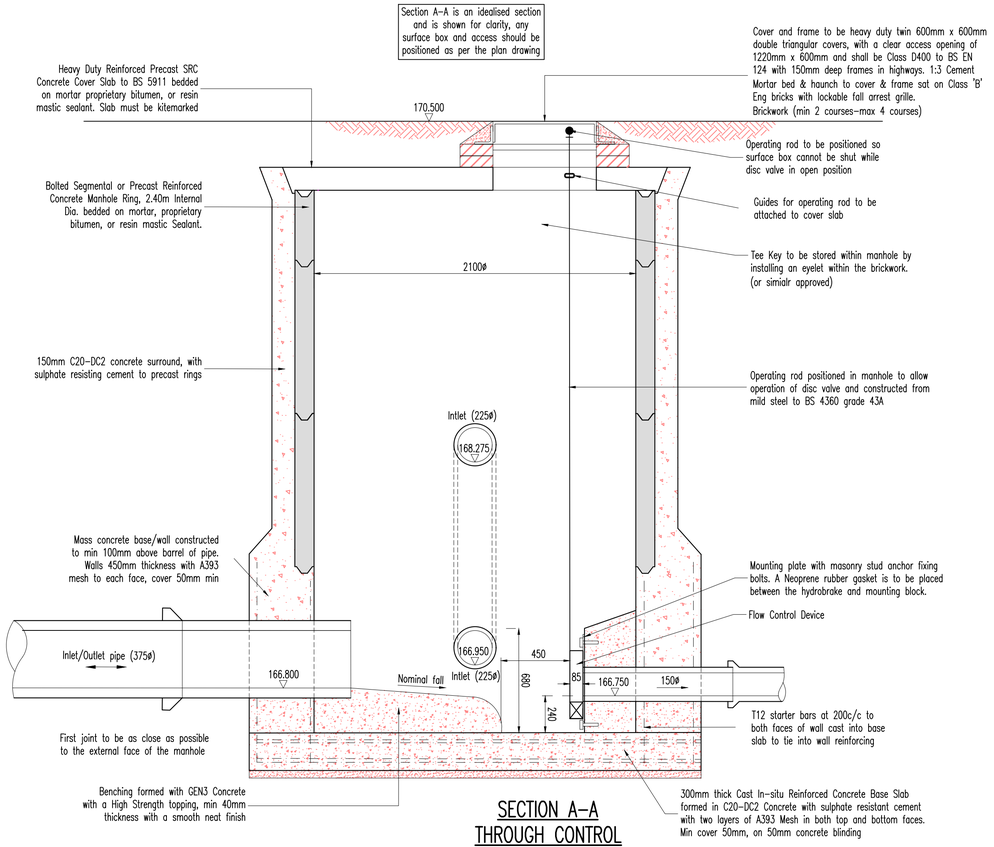

SECTION A-A
THROUGH CONTROL
MANHOLE
(1:20)

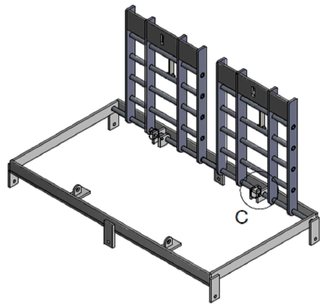

TYPICAL FALL ARREST GRILLE DETAIL
(BY PETER SAVAGE LIMITED)
(NTS)

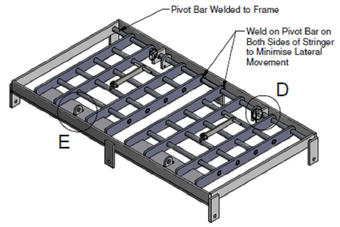

The benching to manholes shall be boxed out and benched in accordance with standard details and the following conditions:

1. Where access into manholes is restricted and the required headroom cannot be achieved.
2. Where the pipe internal diameters are 1050ø or greater.
3. The width of the boxed out benching shall be 750mm.
4. All access ladders or step irons must continue in accordance with the standard manhole details.

All boxing out of the benching within the manholes shall be approved by Yorkshire Water before work commences

All custom built ironwork to be hot-dipped galvanised prior to final fixing

FLOW CONTROL DATA S8

MANUFACTURER	FP MCCANN
TELEPHONE	028 7964 2558
TYPE	STORM BRAKE
FLOW/HEAD	3.5 l/s @ 2.15m
UNIT REF	FPM-SB1-02150-00350-0100
To be installed in accordance with manufacturers specifications and recommendations before the manhole cover slab is installed	

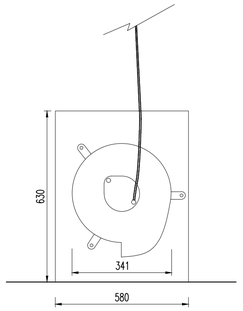

FLOW CONTROL
FACE-ON VIEW
(NTS)

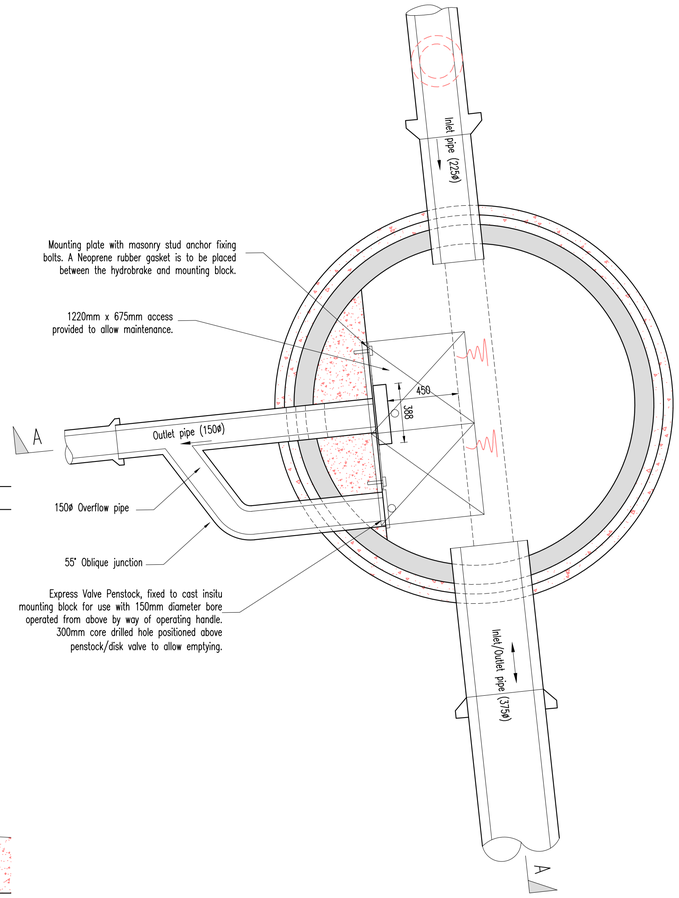

CONTROL MANHOLE
PLAN
(1:20)

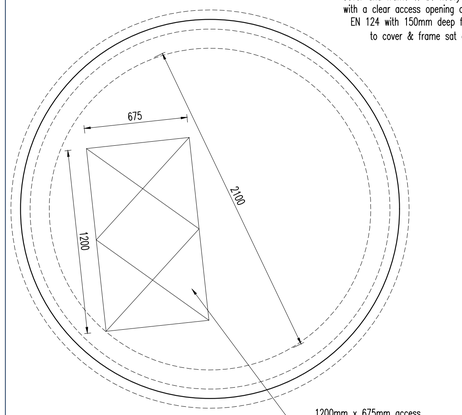

COVER SLAB PLAN
(1:20)

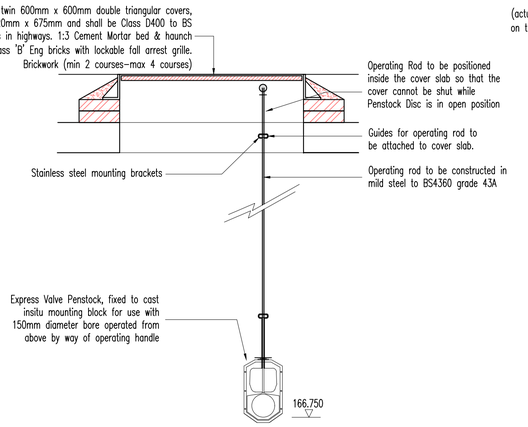

ELEVATION ON PENSTOCK
(1:20)

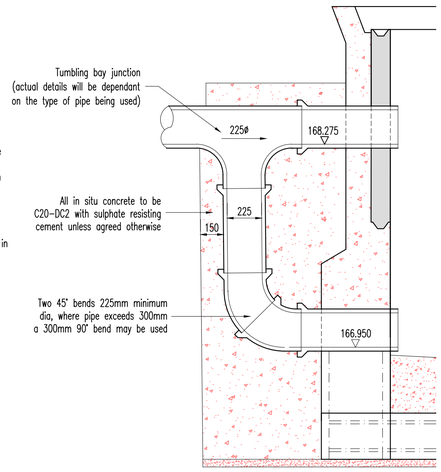

SECTION THROUGH
BACKDROP
(1:20)

N O T E S

SUBJECT TO THE APPROVAL OF ALL RELEVANT AUTHORITIES

DO NOT SCALE | ORIGINAL DRAWING SIZE A1

Yorkshire Water General Notes

1. This drawing is to be read in conjunction with all relevant OEC Consulting Engineers and Architects drawings and project specifications.
2. All adoptable sewer works and material to be in accordance with Design and Construction Guidance (DCG)/Code for Adoption. The relevant British/European and Yorkshire Water's Standards/Requirements/Addendum to the Mechanical and Electrical Specification and be Kitemarked.
3. The location, size and depth of all existing drains/sewers and services shall be established by the contractor prior to commencement of works on site. Any discrepancies from the information indicated on these drawings shall immediately be brought to the attention of the engineers.
4. All levels and dimensions shall be verified on site prior to commencement of any works. Any discrepancies shall immediately be brought to the attention of the engineers.
5. Sewers must have 5 metres clearance from trees and hedges, (please also refer to Figure 2.3 on page 33 in "Sewers for Adoption" 6th Edition for restrictions on tree planting adjacent to Sewers).
6. The adoptable sewers should be a minimum of 1m and manholes 0.5m from kerb faces and service margins.
7. All connections to public sewers to be a minimum of 150mm ø via a 45° junction.
8. Sewers to be laid in Class "S" bedding (150mm granular bed and surround). Where depth of cover to top of the sewer is less than 1.2m in highways and verges (or less than 900mm in none vehicular access areas) then a concrete slab should be provided above the granular bed and surround.
9. Yorkshire Water policy is not to accept Type "C" brick manhole and 1050mm dia manhole rings. Instead it is preferred that you use a type "B" manhole with 1200mm dia or 1500mm dia. rings, with the opening sited over the channel where depth of cover to pipe soffit is 1-1.5m.
10. The chamber size of manholes with more than one connection in them may need to be increased an increment to accommodate the connections and bends.
11. Manhole covers shall/must have a clear opening of 600mm and shall be Class D400 to BS EN 124 with 150mm deep frames in highways. Where a B125 cover and frame has been approved, this must not be coated in plastic and must have lifting eyes suitably sized to accommodate standard lifting keys. Screw down covers are not acceptable.
12. Cover slabs must carry the BSI Kitemark or will be rejected by the Yorkshire Water inspector. Where the clear opening of the Kitemarked product is different to that of the cover and frame, a loading bearing slab should be fitted above the cover slab to bring the size down to 600X600mm for the Yorkshire Water specified cover size. Please refer to the Concrete Pipe Systems Association (CPSA), 'Technical Bulletin' issued autumn 2004 for kitemarked cover slab opening sizes.
13. Plastic channel sections in manholes are not acceptable and clayware is preferable. Plastic channels are difficult to set in concrete and a satisfactory finish cannot be obtained on the benching.
14. Maximum depth of demarcation chamber to be 2m, where depth exceeds 2m, manhole to be constructed as type B manhole.
15. Demarcation chambers to be a min. 450mmø chambers for 100mmø foul & 150mmø surface water pipes up to 1.2m deep. For depths greater than 1.2m, restricted access opening to 350mm is required for safety reasons.
16. Where plastic pipes are proposed for adoptable sewers, structural calculations for the plastic pipes and a site investigation report to prove that the ground condition is suitable for the plastic pipes are to be produced.
17. There should be enough clearance to accommodate the bessding for both pipes, approx 300mm. If the crossover is near the rocker then the clearance needed may be increased.
18. If plastic pipes are to be used then the following should apply:-

    a) All adoptable sewers to be BSI Kitemark (certified to WIS 4-35-01 and BS EN13476

    b) Bedding and backfill material to conform to the requirements of the Water Industry Specification 4-08-02 (Table A2)

19. Adoptable plastic sewer pipes to be BSI Kitemarked (Certified to WIS 4-35-01 and BS/EN13476). Adoptable plastic sewer pipes to be laid in maximum 3 metre lengths unless there is a specific operational need to lay longer.
20. Filled ground or soft spots must be excavated, backfilled and consolidated under the supervision, and to the satisfaction, of Yorkshire Water before any sewer works are carried out.
21. Sulphate resisting cement (C20-DC2) and precast concrete products must be used or a laboratory report provided proving that such precautions are not necessary.
22. The strength of vitrified clay pipes (if used) to be 40KN/m for 100ø, 40KN/m for 150ø, 45KN/m for 225ø and 72KN/m for 300ø. All concrete pipes to be Class 120 to EN 1916/BS 5911-1:2002.
23. Surface water and foul rising mains to be provided with marker tape above the rising mains.
24. Yorkshire Water is not obliged to accept filter drain/land drainage runoff into the public sewer network or adoptable drainage system (directly or in-directly). An alternative method of disposal of the land drainage runoff will therefore be required and you will have to liase with the Land Drainage Authority/Land Drainage Section with regard to the disposal of the filter drain/land drainage runoff is required.
25. All excavations in areas of high water tables and granular materials with high sand/silt contents shall be wrapped with a suitable geotextile filter membrane to prevent migration of sands/silts. Full height clay stanks across trenches and/or at manhole locations at 25m intervals to restrict water movement along the excavation shall be provided.
26. All works within the public highway to be reinstated to the highway authority requirements. All drainage connections onto adoptable drainage systems shall be carried out to the water authority's approval.
27. The contractor must allow for any fee's required for road and sewer opening permits, sewer connections and make the appropriate applications.
28. Where there are double road gullies, the gully leads shall be connected onto separate pipe lengths.

Rev	By	Date	Description	Chk
A	AB	06.04.23	Updated to suit revised external works	AB
/	LS	03.03.23	Issued for approval	AB

CONSULTING ENGINEERS LTD
Clarke Hall Farm • Aberford Road • Wakefield • WF1 4AL
T: 01924 792312 • E: info@oecconsult.co.uk • W: www.oecconsult.co.uk

Client
YORKSHIRE CHOICE HOMES

Project
WESTFIELD LANE,
WYKE

Title
FLOW CONTROL MANHOLE DETAIL

Scale	Drawn	Checked	Date
1:20	LS	AB	MARCH.23

Drawing Status
APPROVAL

Job No.	Drawing No.	Revision
155.004	12	A