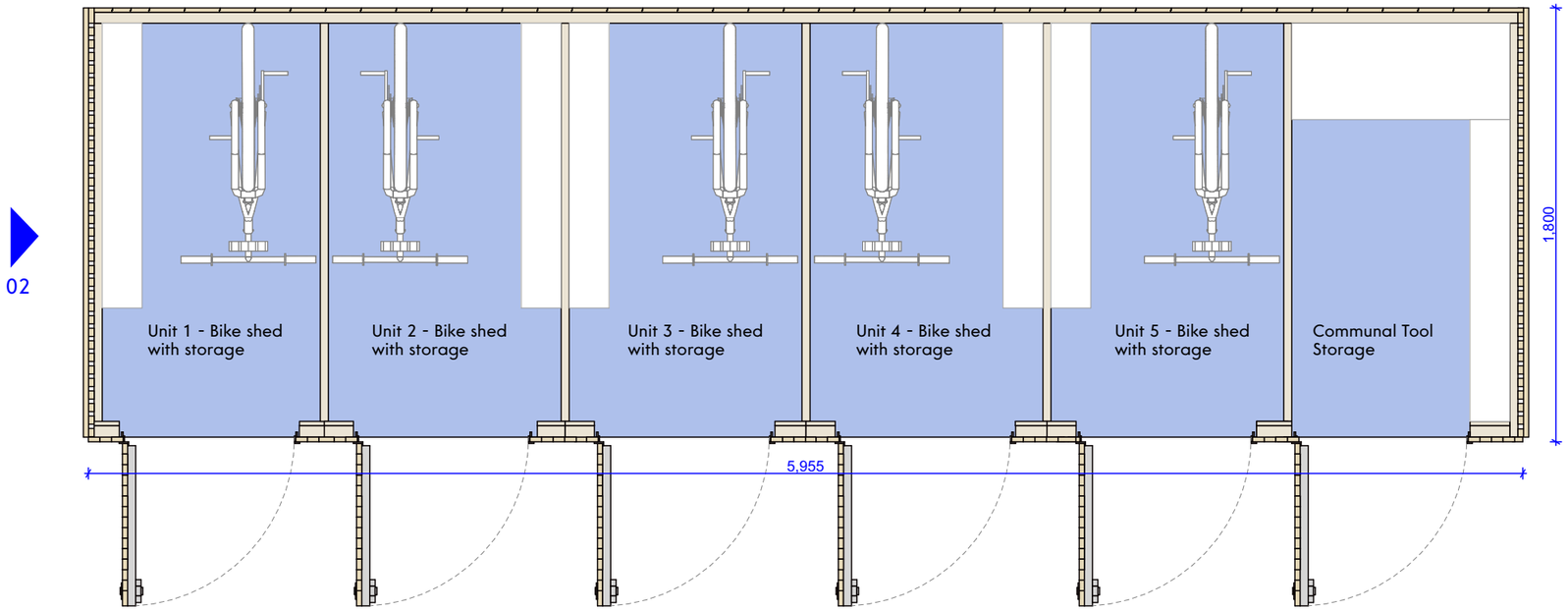

Plan

01

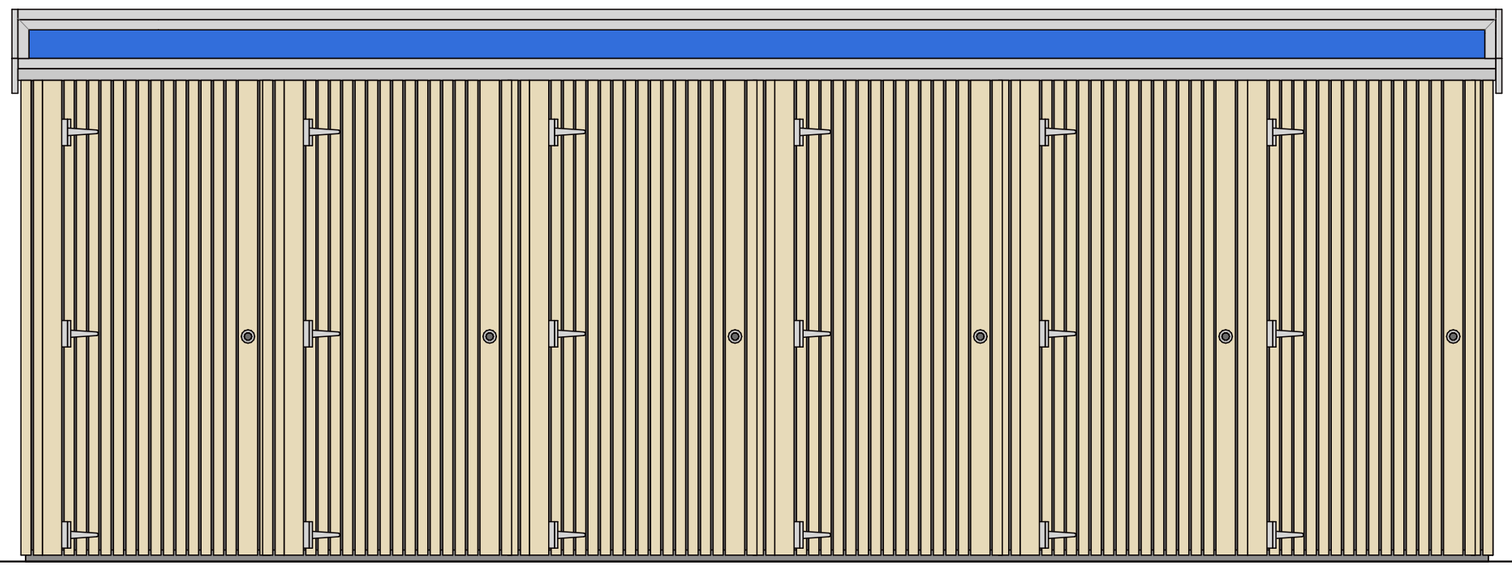

Bike Store & Communal Tool Storage
Elevation 01

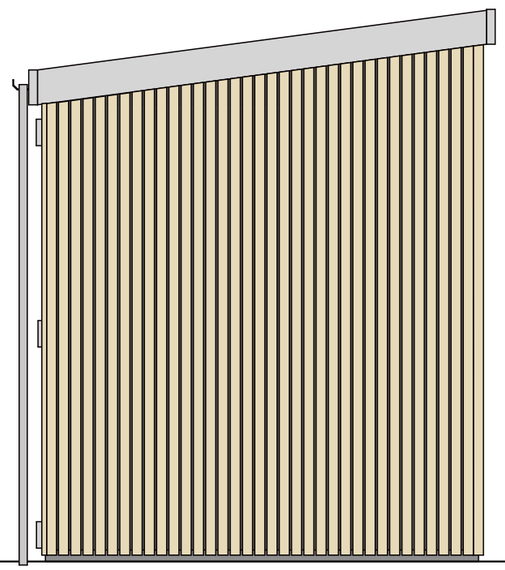

Bike Store & Communal Tool Storage
Elevation 01

Key Features:

Cedar vertical battens

Sedum Green roof

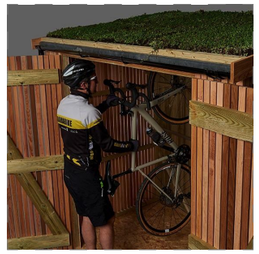

Vertical bike storage

This drawing is the property of GWP Architecture. Copyright is reserved by them and the drawing is issued on the condition that it is not copied, reproduced, retained, or disclosed to any unauthorised person, either wholly or in part, without the consent in writing of GWP Architecture.

All drawings and specifications should be read in conjunction with the project health and safety plan, any possible conflicts should be presented to the Planning Coordinator.

All work to be carried out in accordance with current Building Regulations.

Contractors must verify all dimensions at the job before commencing any work or making shop drawings.

Written dimensions should be taken.

Do not scale off drawing.

Do not take digital dimensions from this drawing.

Any discrepancies to be reported to the Architect.

0 1m

Scale - 1:25 @A3

Key plan

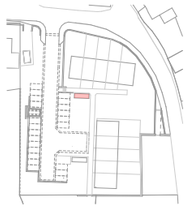

Rev	Date	Comment	Dr	Ch
P01	16.12.22	First Issue	CT	RT

CHARTERED ARCHITECTS
INTERIOR DESIGNERS
SPACE PLANNERS
PROJECT MANAGERS
LANDSCAPE ARCHITECTS

Bracken House, Lidgett Lane. Leeds LS8 1PQ
+44(0)113 266 6044 (t) | +44(0)113 268 1859 (f)
architecture@gwp-arch.com | www.gwp-arch.com

GWP Job Reference (462)2112

Job Title Chippings Site, Scholes

Client

EcoHolmes Community Land Trust
AFFORDABLE LOW ENERGY HOUSING FOR THE HOLME VALLEY

Individual Bike Storage & Communal Tool Shed -Units 1-5

Name	(462)-GWP-01-01-D-A-(PA)-0010		
Scale	1:25@A3	Revision	P01
Drawn/Checked	CT/RT	First Issue	16.12.22
Drawing Status	S2 - Planning		

P:\Planning\Jobs\462\462\2112_EcoHomes_Chippings Dump Site\A_Architects_(GWP)\Model\AC25 BK Chippings Dump Site - (462)2112-GWP-01-DR-A-Huddersfield_EcoHomes_P05.pln