Arboricultural Method Statement

Chapelgate

Scholes

Table of Contents

1 Introduction....3
1.1 Purpose of report....3
1.2 Status....3
2 Preparation for development....4
2.1 Necessary tree works....4
2.2 Protective fencing....4
2.3 Site inspection....4
3 Development Phase....5
3.1 The root protection area (RPA)....5
3.2 Demolition of existing hard surfaces within the RPA....5
3.3 Demolition of existing buildings within the RPA....5
3.4 Construction of special surfaces....6
3.5 Service runs....6
3.6 Changes in ground level....6
3.7 Removal of protective fencing....6
3.8 Post Construction Landscaping....7
4 Completion meeting....8
5 Contact Details....9
Appendix 1: Tree works....10
Appendix 2: Tree protective fencing....11
Appendix 3: Example sign to be attached to tree protective fencing....12
Appendix 4: Example special surfaces within the RPA....13
Appendix 5: Tree protection plans....14

1 Introduction

1.1 Purpose of report

This report has been created to ensure good practice in the management of trees during the proposed development at: Chapelgate, Scholes.

1.2 Status

The recommendations of this report are based on the plans as provided and incorporates information from our tree survey Ref:210618/TS/a

This report should be included as part of any specifications and schedules of works supplied to all demolition and construction contractors.

2 Preparation for development

2.1 Necessary tree works

The first operation will be the tree pruning and felling works as detailed at **Appendix 1**.
All tree works should be carried out by suitably qualified, experienced and insured contractors in accordance with BS3998: 2010.
In order to both reduce costs and to ensure timely completion, no check has been made by this consultant with the local planning authority.
We recommend that the local planning authority is contacted to check whether the trees on this site are protected by a Tree Preservation Order or are within a Conservation Area.
Trees may also be subject to legal protection under a range of other legislation, much of which is aimed at wildlife and habitat protection.
No work should be done to any trees until either suitable permission has been granted or it has been verified that the intended work does not require permission.
We are happy to assist in establishing whether trees on this site are protected by a Tree Preservation Order or a Conservation Area designation if required.

2.2 Protective fencing

The protective fences can be installed after the necessary tree works are completed, but they must be fully installed and completed before any other work commences, this includes; demolition, soil stripping or the bringing onto site of materials, supplies or machinery.
Protective fencing must be constructed in such a way as to exclude construction activity and be appropriate to the degree and proximity of likely works. The default fencing as described in BS5837:2012 is shown at **Appendix 2**.
Unless otherwise specified in this report or its attached drawings the fenced areas shall be considered complete construction exclusion zones; there shall be no pedestrians, vehicles, materials, equipment or machinery allowed in the fenced areas at any time.
There should be adequate signs informing all relevant persons that access is denied, an example sign is included at **Appendix 3**.
Care must also be taken to prevent fenced areas being contaminated with chemical spillages, including; petrol, diesel, oils, cements and concretes. In addition, water run-off from areas of construction activity must be diverted away from fenced areas.

2.3 Site inspection

Once the necessary tree works have been completed and the protective fences are in place it is recommended that the developer's arboriculturist is invited to visit the site, meet with the relevant local authority representative, and check that the necessary tree works and the protective fences are completed satisfactorily.

3 Development Phase

3.1 The root protection area (RPA)

The root protection area (RPA) is the area of ground it is desirable to leave undisturbed during development. BS5837:2012 recognises that this is often not practical and that some development within the RPA should be allowed.

The RPAs are shown on the attached plan as hatched circles or squares.

Other than the activities as shown in this method statement, there must be no activity of any kind within any RPA unless it is by prior written agreement of the local authority.

3.2 Demolition of existing hard surfaces within the RPA

Existing hard surfaces must be removed with caution to prevent damage to tree roots. This should be done using hand tools, but suitable machinery may be used in some situations.

Where machinery is to be used to break up existing surfaces then work should be done progressively; starting closest to the trees and working backwards towards the outer edge of the root protection areas. Tracks, wheels, or other load bearing parts of machinery used must be located on existing hard surfaces at all times when within the root protection area – vehicles, machinery and equipment must not enter the areas where hard surfaces have already been removed.

Excavation within the RPA must not be deeper than the existing hard surface unless otherwise agreed in writing with the local authority.

Broken up tarmac, concrete and other arisings should ideally be removed by hand using a wheel barrow. However, where the use of machinery (such as excavators, mini-diggers, or dump trucks) is permitted by the local authority, then buckets must have a straight edge and vehicle tracks and/or wheels must be located on existing hard surfaces at all times when within the root protection area.

3.3 Demolition of existing buildings and other features within the RPA

Often there are existing buildings within the RPA, these must be demolished inwards and within their existing footprint.

Existing foundations and other below ground or surface features must be either left in place, or must be dismantled and removed as described in section '3.2 - Demolition of existing hard surfaces within the RPA'.

3.4 Construction of special surfaces

Where special surfaces are to be constructed within the RPA then these surfaces must be completed prior to the areas being used for pedestrian or vehicle access.

Until special surfaces within the RPA are complete the RPA must be treated in the same way as any other area which has been protected with tree protective fencing as described at 3.1.

This means that until the surface is fully installed, there must be no; pedestrians, vehicles, materials, equipment or machinery allowed within the RPA at any time, other than as required for construction of the special surface.

The design and construction techniques of special surfaces within tree root protection areas must meet the biological and environmental requirements of tree roots; the expected level and type of traffic; and be practicable in terms of time and resources required for construction.
BS5837:2012 recommends that where the construction of a hard surface is required within the root protection area a "no dig" construction method is used where possible.
Please note that we are not qualified to discuss the structural suitability of any product. However, the arboricultural requirements of special surfaces as described in our method statement can be addressed by using cellular confinement systems such as those produced and installed by Geosynthetics (www.geosyn.co.uk).

3.5 Service runs

New underground services **must not** be installed within the tree root protection areas.
Above ground services should be positioned away from the crowns of trees to be retained.
Any works to existing underground services should be done in accordance with current NJUG (National Joint Utilities Group) guidance.

3.6 Changes in ground level

There must be no works within an RPA unless by prior written agreement of the local authority.

3.7 Removal of protective fencing

When the development phase is complete, all drainage and service runs are in place, and the main site machinery has been removed, the protective fencing may be dismantled. This must be done with care, there must be no; vehicles, materials, equipment or machinery allowed within the RPA at any time.

3.8 Post Construction Landscaping

Some trees on the site are likely to be subject to some form of landscaping or seeding beneath the canopy after the main development phase has been completed. At this stage, it is inevitable that some of the protective fencing will have already been removed.
In view of this, the landscaping works must be carried out in such a way as to avoid ground level changes or deep digging. Mechanised cultivation methods must be avoided within the RPA.
There must be no; vehicles, materials, equipment or machinery allowed within the RPA of retained trees at any time.
Any herbicides used must be appropriate for their purpose, and must not be used in such a way as will damage trees to be retained.

4 Completion meeting

Upon completion of all the works specified, it is recommended that the developer’s arboriculturist and the local authority's arboriculturist are invited to meet on site to check that all works are completed satisfactorily and to discuss any remedial works as required.

5 Contact Details

I hope this report provides all the required information. However, if further advice is needed then please contact me and I will be happy to help.

James Royston – Independent Arboricultural Consultant
MSc Arboriculture and Urban Forestry, BSc (Hons) Forestry.

The Media Centre

7 Northumberland Street

Huddersfield

01484 483 061

jr@jamesroyston.co.uk

Report completed 20th June 2022

Appendix 1: Tree works

Tree Number	Common Name	Botanical Name	Pre-development tree works	Reason for works
1	Mix	*Mix*	None	NA
2	Willow	*Salix sp.*	Remove	To facilitate development
3	Birch and willow	*Betula pendula and Salix sp.*	Remove	To facilitate development
4	Willow	*Salix sp.*	Remove	To facilitate development
5	Birch	*Betula pendula*	None	NA
6	Elm	*Ulmus sp*	Remove	To facilitate development
7	Ash and sycamore	*Fraxinus excelsior and Acer pseudoplatanus*	Remove	To facilitate development
8	Birch	*Betula pendula*	Remove	To facilitate development
9	Goat willow	*Salix sp.*	Remove	To facilitate development
10	Birch	*Betula pendula*	Remove	To facilitate development
11	Cherry	*Prunus sp.*	Remove	To facilitate development
12	Birch	*Betula pendula*	None	NA
13	Ash	*Fraxinus excelsior*	Remove	To facilitate development
14	Birch	*Betula pendula*	None	NA

Appendix 2: Tree protective fencing

Figure 2 **Default specification for protective barrier**

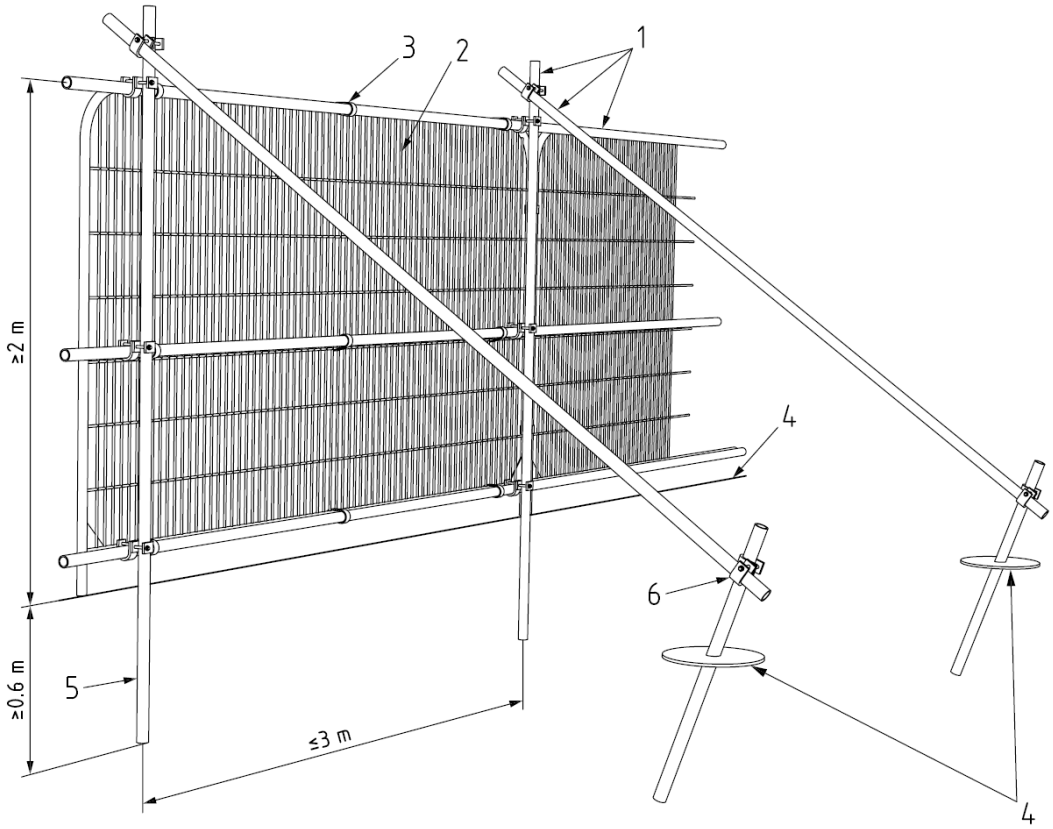

Key

1 Standard scaffold poles

2 Heavy gauge 2 m tall galvanized tube and welded mesh infill panels

3 Panels secured to uprights and cross-members with wire ties

4 Ground level

5 Uprights driven into the ground until secure (minimum depth 0.6 m)

6 Standard scaffold clamps

Figure 3 **Examples of above-ground stabilizing systems**

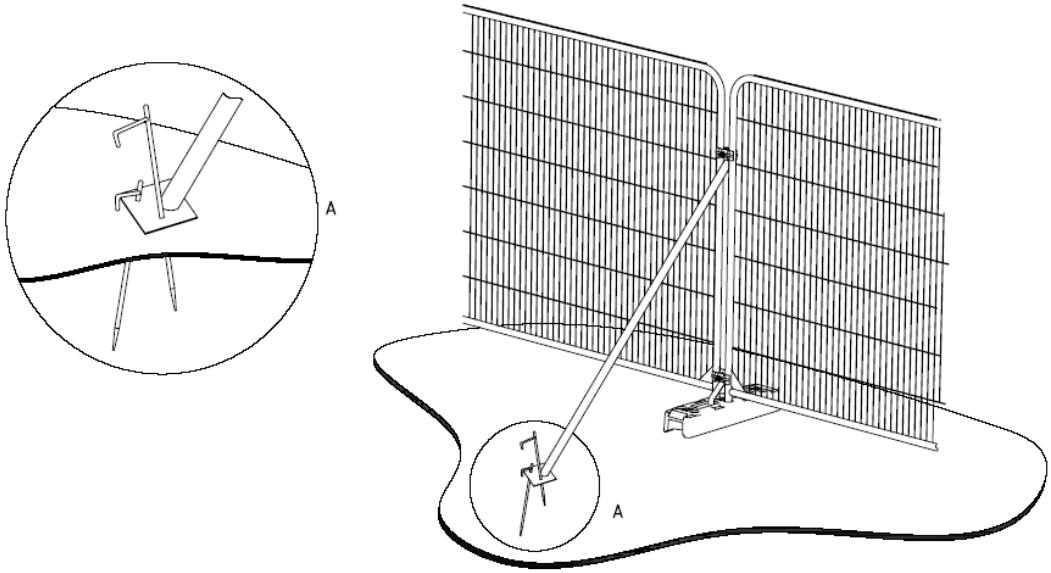

a) Stabilizer strut with base plate secured with ground pins

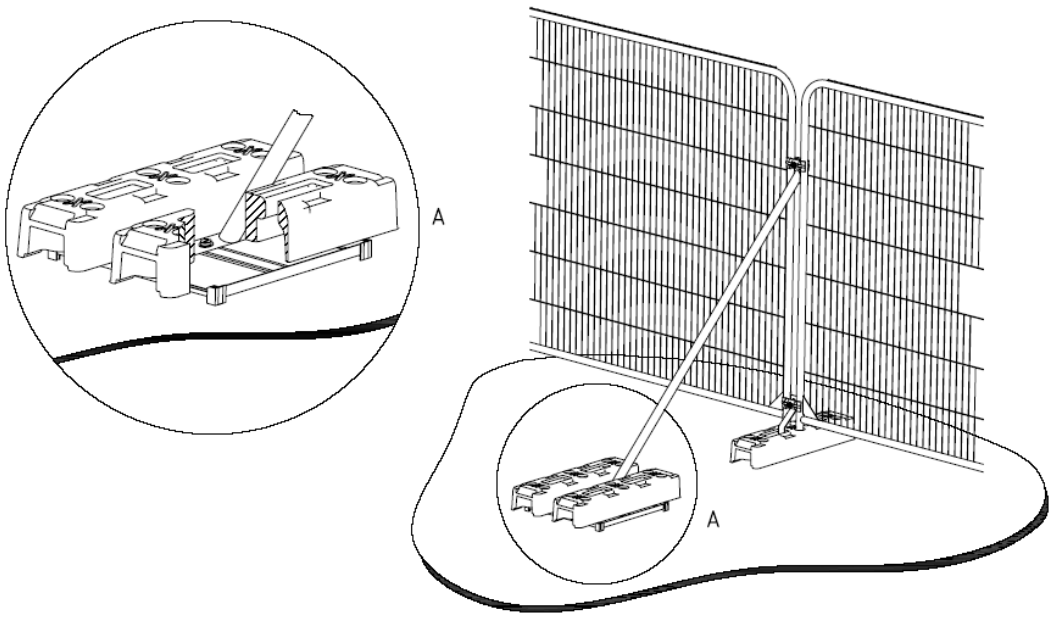

b) Stabilizer strut mounted on block tray

Appendix 3: Example sign to be attached to tree protective fencing

TREE PROTECTION AREA - KEEP OUT

TREES ENCLOSED BY THIS FENCE ARE PROTECTED
BY PLANNING CONDITION AND/OR A TREE PRESERVATION ORDER

NO INCURSION WITHOUT THE PRIOR WRITTEN PERMISSION OF THE
LOCAL PLANNING AUHORITY

Appendix 4: Example special surfaces within the RPA

An example of a 'no dig' construction method incorporating a cellular confinement system.

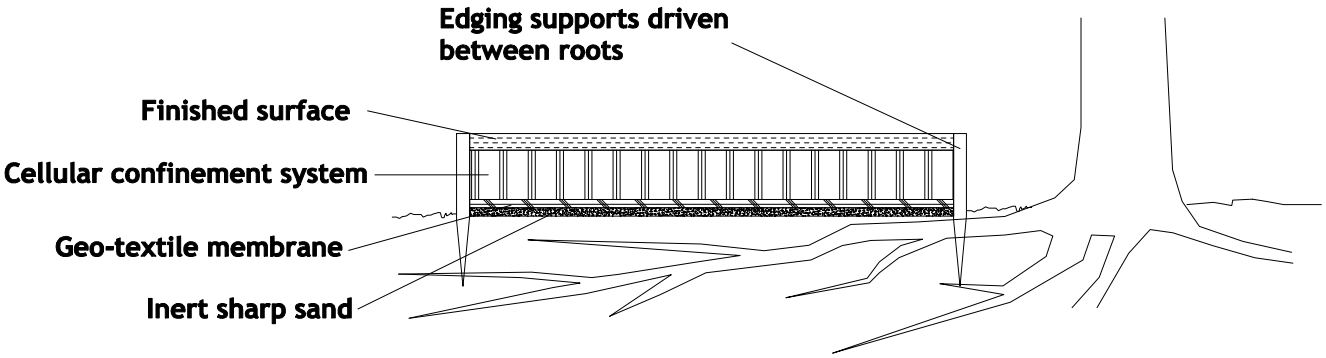

Appendix 5: Tree protection plans

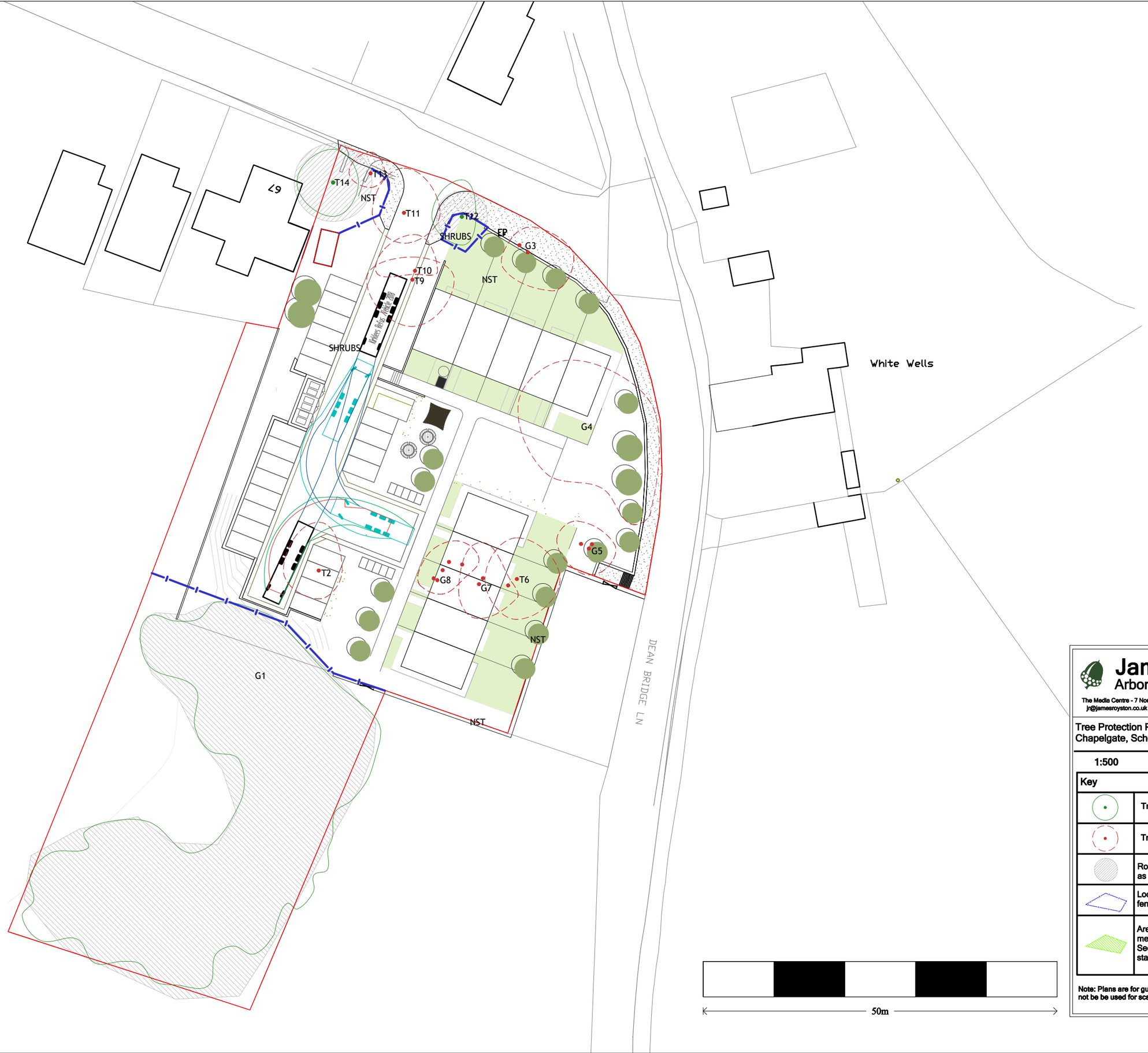

James Royston
Arboricultural Consultant

The Media Centre - 7 Northumberland Street - Huddersfield - HD1 1RL
jr@jamesroyston.co.uk - 01484 483 061 - www.jamesroyston.co.uk

Tree Protection Plan to BS5837:2012 at:
Chapelgate, Scholes

1:500	PAPER SIZE A3

Key	
	Tree to be retained
	Tree to be removed
	Root Protection Area (RPA) shown as a circle as an approximate guide.
	Location of tree protective fencing
	Area of special tree protection measures. See annotations and method statement for further details.

Note: Plans are for guidance only. These drawings should not be be used for scaling.