ARBORICULTURAL METHOD STATEMENT
to BS 5837:2012
at
13 Doctor Lane
Mirfield
West Yorkshire
WF14 8DN

Client:
Orange Design Studio

Client Address:
The Studio, 59a
Huddersfield Road
Mirfield
West Yorkshire
WF14 8AA

Client Telephone:
01924 650930

JCA Ref:
16579/ChC – Rev 1

JCA Limited
Arboricultural & Ecological Consultants

Contents

1. Introduction 3

2. Tree Works Prior, During and Post Construction 4

3. The Protective Fencing Prior, During and Post Construction 5

4. Construction Phase 7

4.1 Demolition Works 7
4.2 Ground Level Changes 7
4.3 Construction of Hard Surfaces 7
4.4 Construction of the Extension & Renovation of the Garages 7
4.5 Excavations and Services 8
4.6 Location of the Site Compound 8

5. Timescale of Works 9

6. Relevant Contact Details 9

Appendix 1: Tree Works Schedule 11

Appendix 2: Protective Barrier 12

Appendix 3: Utilities and Drainage 14

Appendix 4: Tree Constraints Plan 16

Appendix 5: Tree Protection Plan 17

© JCA Limited 2021

1. Introduction

1.1 Purpose of the Method Statement

1.1.1 This Arboricultural Method Statement has been prepared to ensure good practice in the protection of retained trees during the development at **13 Doctor Lane, Mirfield.**

1.2 Terms of Reference

1.2.1 JCA Limited is instructed by **Orange Design Studio** to prepare an Arboricultural Method Statement for the proposed development. The arboricultural survey and report conforms to the most recent specifications outlined in BS 5837: 2012 *Trees in relation to design, demolition and construction - Recommendations*.

1.2.2 The proposed scheme includes a rear, single-storey, flat roof extension to accommodate an open zone kitchen dining living area at the rear of the property, with large openings out into the rear amenity space.

1.2.3 The detached garage is proposed to have the eaves and ridge level lifted to form habitable accommodation on the first floor.

1.2.4 The following drawings have been provided and these are the basis of the Arboricultural Method Statement and the Tree Protection Plan at **Appendix 5**:

- **Existing Site Plan**
- **Proposed Site Plan**

1.3 Status of the Method Statement

1.3.1 This Arboricultural Method Statement should be included as part of the specification and schedule of works issued to the building contractor and can form part of the contract.

1.3.2 This Arboricultural Method Statement should be available on site for inspection by the local authority, contractors and other relevant persons.

2. Tree Works Prior, During and Post Construction

2.1 Tree Works Prior to Construction

2.1.1 The canopies of **T3** and **T6** will be in close proximity to the proposed extension/garage. However, they are already close to the existing structures here. The council have also stipulated that they would not support a scheme which requires the pruning of these trees, as such the scheme must go ahead without pruning any of the trees to accommodate the structures, as this may reduce the amenity value in which they have.

2.2 Tree Works During Construction

2.2.1 No above ground tree works are envisaged to be required during the construction phase.

2.2.2 Damage to trees during the construction phase should be entirely prevented by the installation of the temporary protective fencing), to create a Construction Exclusion Zone (CEZ). All persons on site must be aware of limitations that apply within the CEZ (please refer to **Section 3.1.3**).

2.2.3 If any trees on site are damaged, this must be immediately reported to JCA to agree on appropriate remedial action. Contact numbers for all parties can be found at **Section 7**.

2.3 Tree Works Post Construction

2.3.1 It is not envisaged that any tree works will be required post development. However, if any post construction remedial works are required then these must be applied for via a tree work application submitted to the Local Planning Authority.

2.3.2 No post construction remedial works are to be carried out on the trees until permission has been granted by the Local Planning Authority.

2.4 Recommendations For Tree Works

2.4.1 All work must be undertaken to BS 3998: 2010 - *Recommendations for tree work* and carried out by qualified, experienced and, ideally, Arboricultural Association approved contractors who must be adequately insured.

2.4.2 Any defects seen by a contractor or the client that were not apparent to the consultant must be brought to the attention of JCA immediately.

2.4.3 No liability can be accepted by JCA in respect of the trees unless the recommendations of this Method Statement are carried out under our supervision.

3. The Protective Fencing Prior, During and Post Construction

3.1 Protective Fencing Prior to Construction

3.1.1 The installation of the temporary protective fencing will be the very first job to be undertaken on site following the completion of the tree works (**Section 2.1**).

3.1.2 The protective fencing must be constructed in accordance with BS 5837: 2012 *Trees in relation to design, demolition and construction - Recommendations* and will be located as shown on the Tree Protection Plan at **Appendix 5**. Where possible, the protective barrier will enclose the entire Root Protection Area (RPA) of the trees to make a Construction Exclusion Zone (CEZ); **this area is to be considered a restricted area; no pedestrians, vehicles, equipment or machinery are allowed within the CEZ and the storage of materials is not permitted.**

3.1.3 The protective fencing will be installed in accordance with BS 5837: 2012 and will comprise of a vertical and horizontal scaffold framework, well braced to resist impacts. The vertical tubes should be spaced at a maximum interval of 3m and driven securely into the ground, taking care to avoid underground services and structural roots. Finally, weld mesh panels are to be securely fixed on the scaffold framework. Please refer to **Appendix 2 (Fig 1)** for protective fencing details.

3.1.4 Once the fencing is installed, waterproof signs with the sentence '*Protected tree zone, no storage or operations within this are*a' are to be placed at 3m intervals to ensure that all personnel are aware of the restrictions that apply to the cordoned off area. A prepared sign is available at **Appendix 2**.

3.2 Ground Protection

3.2.1 No ground protection measures are considered necessary for this project as the protective fencing will provide adequate protection to all the trees surveyed.

3.3 Checking the Protective Fencing Prior to Construction

3.3.1 Once installed, the appointed arboriculturalist will be invited on site to inspect the protective fencing, ensuring that it is located in the correct position and that it has been constructed in accordance with this Method Statement. No other work shall commence until the fencing is installed and confirmed to be acceptable.

3.3.2 It is important that the protective fencing be checked prior to any construction works being carried out on site. **If at any time during construction the protective fencing is not correctly installed, or if it does not comply with BS 5837: 2012, this could result in damage being caused to trees and consequently, a stop notice may be served by the LPA.**

3.4 Protective Fencing During Construction

3.4.1 No operations shall take place which require the removal of part of the protective fencing without prior agreement with the Local Planning Authority.

3.4.2 The protective fencing must be inspected for faults or damage by the site manager or other responsible named person on a regular basis and a written record kept. Any faults or defects must be repaired or replaced as soon as is reasonably practicable. Details of the site manager and relevant contact details can be found at **Section 7**.

3.5 Removal of the Protective Fencing

3.5.1 When the development phase is complete and the main site machinery has been removed, the protective fencing may be dismantled and removed from site.

3.5.2 It should be noted the same restrictions apply to all RPAs as the CEZ (please refer to **Section 3.1.2**).

4. Construction Phase

4.1 Demolition Works

4.1.1 In this case, no major demolition works are required adjacent to retained trees. Some roof removal work will be required for the garages but providing that the protective fencing is installed correctly and prior to the commencement of demolition/ construction, no further actions are required to prevent foreseeable damage to these trees. See **Section 3** for further details regarding the protective fencing.

4.2 Ground Level Changes

4.2.1 No ground level changes are required within the RPA of any tree to be retained on this site. As such no mitigation actions are considered necessary.

4.3 Construction of Hard Surfaces

4.3.1 No new hard surfaces are proposed within the RPA of retained trees. As such, no specialist mitigation actions are required.

4.3.2 The existing driveway and entrance are proposed to be retained and utilised for the project (and retained post construction) which offers vehicular access into the site.

4.4 Construction of the Extension and Renovation of the Garages

4.4.1 Some minor encroachment into the RPA's of **T3** and **T6** is likely to be required to achieve the construction of the extension to the main building and renovation of the garages, as indicated in blue on the plan at **Appendix 5.** As these encroachments are so minor, they are considered negligible and do not require any form of specialist techniques or materials to be used, and site supervision in these areas by a qualified Arboriculturist is not considered necessary.

4.4.2 In this case, the proposed buildings are located at a sufficient distance from retained trees that no specialist foundation methods are required for arboricultural purposes.

© JCA Limited 2021

4.5 Excavations and Services

4.5.1 Precise details on service routes have not been provided to us at this time. However, as there is an existing dwelling on site it is expected that the existing services which serve the property can be used for the extension and garage renovation.

4.5.2 If, for whatever reason, incursions into the RPAs are considered unavoidable, the consulting arboriculturalist and/or the LPA must be consulted immediately, to prevent a breach of planning conditions and/or damage to retained trees.

4.5.3 Generic guidance and methodologies on the installation of underground services whilst minimising damage to tree roots is provided at **Appendix 3** if required.

4.6 Location of the Site Compound

4.6.1 The site compound, typically including the site office, mess facilities, toilets, storage of materials and parking, must be located away from, and outside the RPA of retained trees.

4.6.2 Those areas designated for the storage and/or mixing of chemicals, including petrol, diesel and oils must also be located away from, and outside the RPA of retained trees. Such areas should be constructed with consideration to, and contingencies for, the occurrence of spillages, preventing the leaching of chemicals into unprotected, open ground.

© JCA Limited 2021

5. Timescale of Works

5.1.1. The timescale for arboricultural requirements are summarised below:

Timescale	Action	✓	Initial
Stage 1	All requirements listed in the planning consent are approved by the Local Authority planning office.		
Stage 2	Install the temporary protective fencing around the trees (as detailed at **Appendix 2** and as shown on the Tree Protection Plan at **Appendix 5**).		
Stage 3	Have the Local Planning Authority or Arboricultural Consultant inspect the fencing **prior** to any on site construction. Once inspected, the protective fencing must not to be moved or breached.		
Stage 4	Construction Phase: Undertake the extension of the main dwelling and renovation of the garages whilst taking care not to damage the canopies of **T3** and **T6**.		
Stage 5	Following the completion of the construction phase and when all site traffic and machinery has left, the protective fencing can be dismantled and removed from site.		

6. Relevant Contact Details

Contact Name	Organisation/Detail	Contact Number
Charles Cocking Arboricultural Consultant	JCA Limited	01422 376335
Joe Robertson Tree Officer	Kirklees Metropolitan District Council	01484 221589
TBC Site Manager	TBC	TBC
Edward Gribbin Architect	Orange Design Studio	01924 650930

Appendices

Tree Ref.	Age Common Name *Botanical Name*	Height (m)	Crown Height (m)	Height (m) and Direction of the Lowest Branch	Diameter (cm)	Crown Spread N W E S	Observations	Recommendations	Physiological Condition	Structural Condition	Amenity Value	NHBC Water Demand	Life Expectancy (yrs)	Retention Category
T 1	Mature London Plane *Platanus x hispanica*	15	4	2 NW	111	9 10 6 7	Single-stemmed with a slight lean and a reasonably balanced crown. A large garden specimen; an important feature. No major visible defects were observed. **This tree is subject to a Tree Preservation Order (TPO).**	No action required.	GOOD	GOOD	MOD	MOD	40+	1 A 2
T 2	Early-mature Common Lime *Tilia x europaea*	16	3.5	n/a n/a	#40	4 4 4 4	Situated on adjacent land but overhanging the garden. Dense Ivy on the stem. Limited inspection due to restricted access.	No action required.	GOOD	GOOD	MOD	MOD	20+	1 B 2
T 3	Mature Beech *Fagus sylvatica*	16	5	3 n/a	72	7.5 6 5 7	Single-stemmed and vertical with a balanced crown. Previous pruning wounds. No major visible defects were observed. **This tree is subject to a Tree Preservation Order (TPO).**	No action required.	GOOD	GOOD	MOD	MOD	40+	1 A 2
H 4	Early-mature Leylandii *X Cupressocyparis leylandii*	4	0+	n/a n/a	n/a	See Plan	A well maintained boundary hedge offering excellent screening value for the property from the adjacent road.	No action required.	GOOD	GOOD	MOD	HIGH	20+	B 2
T 5	Mature Common Lime *Tilia x europaea*	18	3.5	4 SW	#55	6.5 6 5 5	Single-stemmed and vertical with a balanced crown. Situated on adjacent land. Limited inspection due to restricted access. No major visible defects were observed. **This tree is subject to a Tree Preservation Order (TPO).**	No action required.	GOOD	GOOD	MOD	MOD	40+	1 A 2
T 6	Mature Common Lime *Tilia x europaea*	18	3	2 n/a	#70	6 6 7 6	Twin-stemmed at 2m with a balanced crown. Situated on adjacent land. Dense Ivy. No major visible defects were observed. **This tree is subject to a Tree Preservation Order (TPO).**	No action required.	GOOD	GOOD	MOD	MOD	40+	1 A 2

Appendix 2: Protective Barrier

A2.1 The protective barrier will be installed in accordance with BS5837: 2012. The default specification of BS 5837: 2012 (pictured below for reference) recommends a vertical and horizontal, scaffold framework, well braced to resist impacts, with vertical tubes at no more than 3m intervals. These should be driven into the ground. Weld mesh panels should be affixed to this framework with scaffold clamps - See Figure 1.

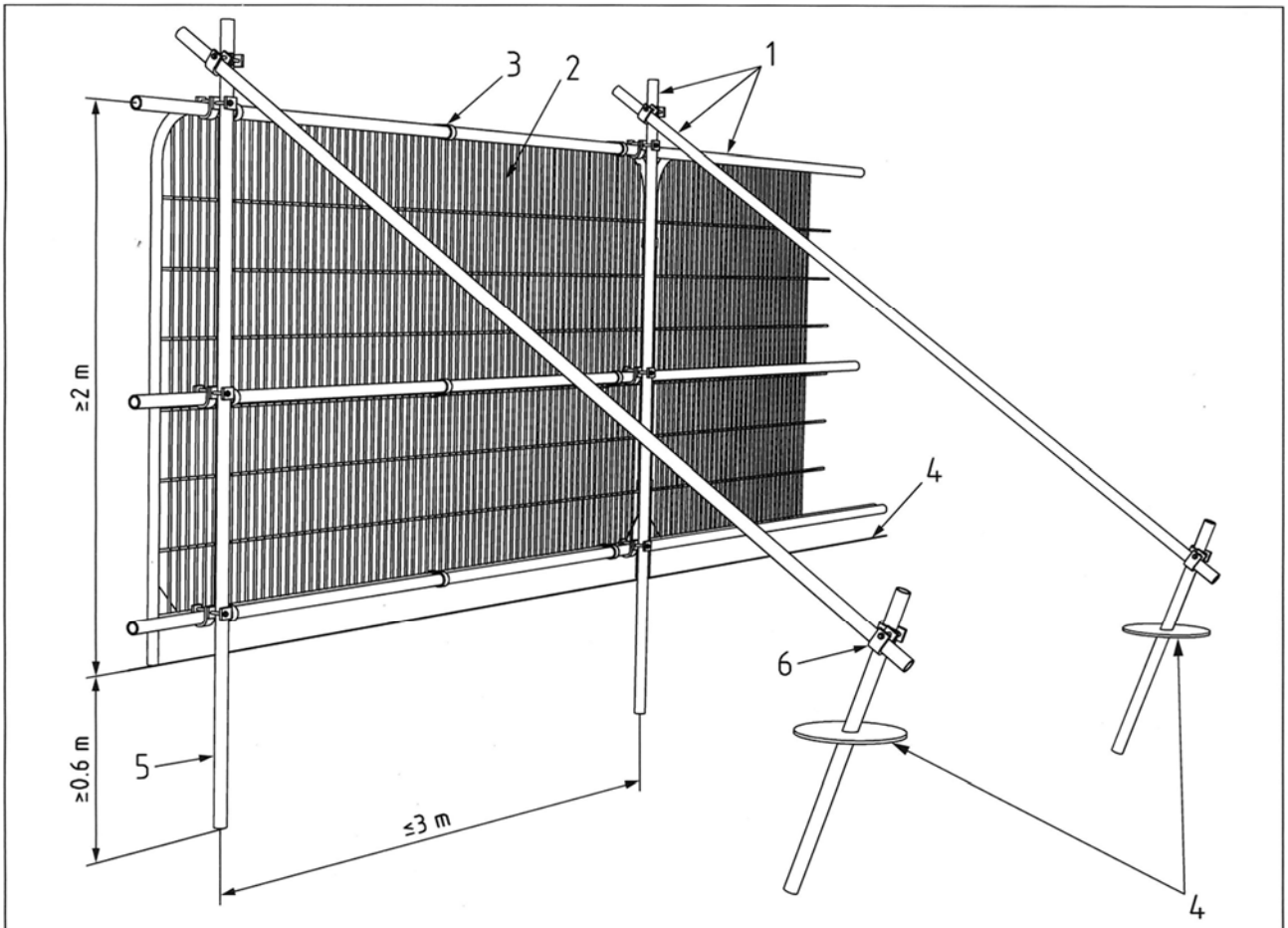

Key

1 Standard scaffold poles
2 Heavy gauge 2 m tall galvanized tube and welded mesh infill panels
3 Panels secured to uprights and cross-members with wire ties
4 Ground level
5 Uprights driven into the ground until secure (minimum depth 0.6 m)
6 Standard scaffold clamps

Figure 1: 'Protective Barrier to BS 5837: 2012'. To be used where situated in open ground.

TREE PROTECTION ZONE

KEEP OUT!

TREES ENCLOSED BY THIS FENCE ARE PROTECTED
BY STRICT PLANNING CONDITIONS

ANY DAMAGE CAUSED TO THESE TREES MAY
RESULT IN **CRIMINAL PROSECUTION**

RESTRICTED AREA:

- THE PROTECTIVE FENCE MUST NOT BE MOVED OR BREACHED
- NO PERSON, MACHINERY, VEHICLE OR PLANT IS PERMITTED WITHIN THE TREE PROTECTION ZONE
- NO MATERIALS SHALL BE STORED WITHIN THE TREE PROTECTION ZONE
- NO EXCAVATIONS ARE PERMITTED WITHIN THE TREE PROTECTION ZONE
- NO SPOIL IS TO BE DEPOSITED WITHIN THE TREE PROTECTION ZONE
- NO FIRES ARE TO BE LIT WITHIN THE TREE PROTECTION ZONE

REPORT TREE DAMAGE TO JCA LIMITED ON
01422 376 335

Appendix 3: Utilities and Drainage

A3.1 Over-ground services should be routed away from areas where they are likely to interfere with the crowns of trees. Similarly any landscaping should take account of over-ground services and mature tree size.

A3.2 Underground services must be routed outside the RPA of retained trees, unless otherwise specified within this report. NJUG Volume 4 Issue 2 (on the next page) is a set of accepted guidelines for installing services in the proximity of trees. Please note that this is not a substitute for site-specific advice by an arboriculturalist and consultation should be made wherever incursions of RPAs are envisaged. The contents of this report, specifically **Section 4.5**, supersede the set of guidelines on the next page, which are only included for reference.

The National Joint Utilities Group

NJUG Guidelines for the Planning, Installation and Maintenance of Utility Apparatus in Proximity to Trees – Issue 2

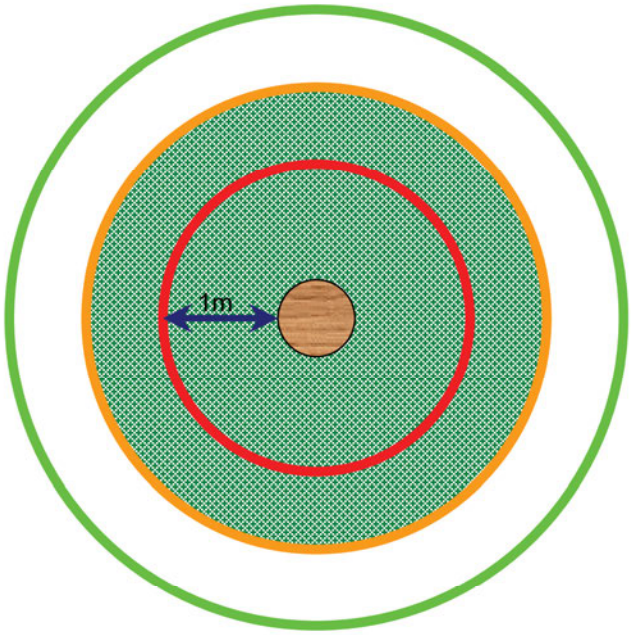

TREE PROTECTION ZONE

Key to Diagram

Trunk of Tree

Spread of canopy or branches

PROHIBITED ZONE – 1m from trunk. Excavations of any kind must not be undertaken within this zone unless full consultation with Local Authority Tree Officer is undertaken. Materials, plant and spoil must not be stored within this zone.

PRECAUTIONARY ZONE – 4 x tree circumference. Where excavations must be undertaken within this zone the use of mechanical excavation plant should be prohibited. Precautions should be undertaken to protect any exposed roots. Materials, plant and spoil should not be stored within this zone. Consult with Local Authority Tree Officer if in any doubt.

PERMITTED ZONE – outside of precautionary zone. Excavation works may be undertaken within this zone however caution must be applied and the use of mechanical plant limited. Any exposed roots should be protected.

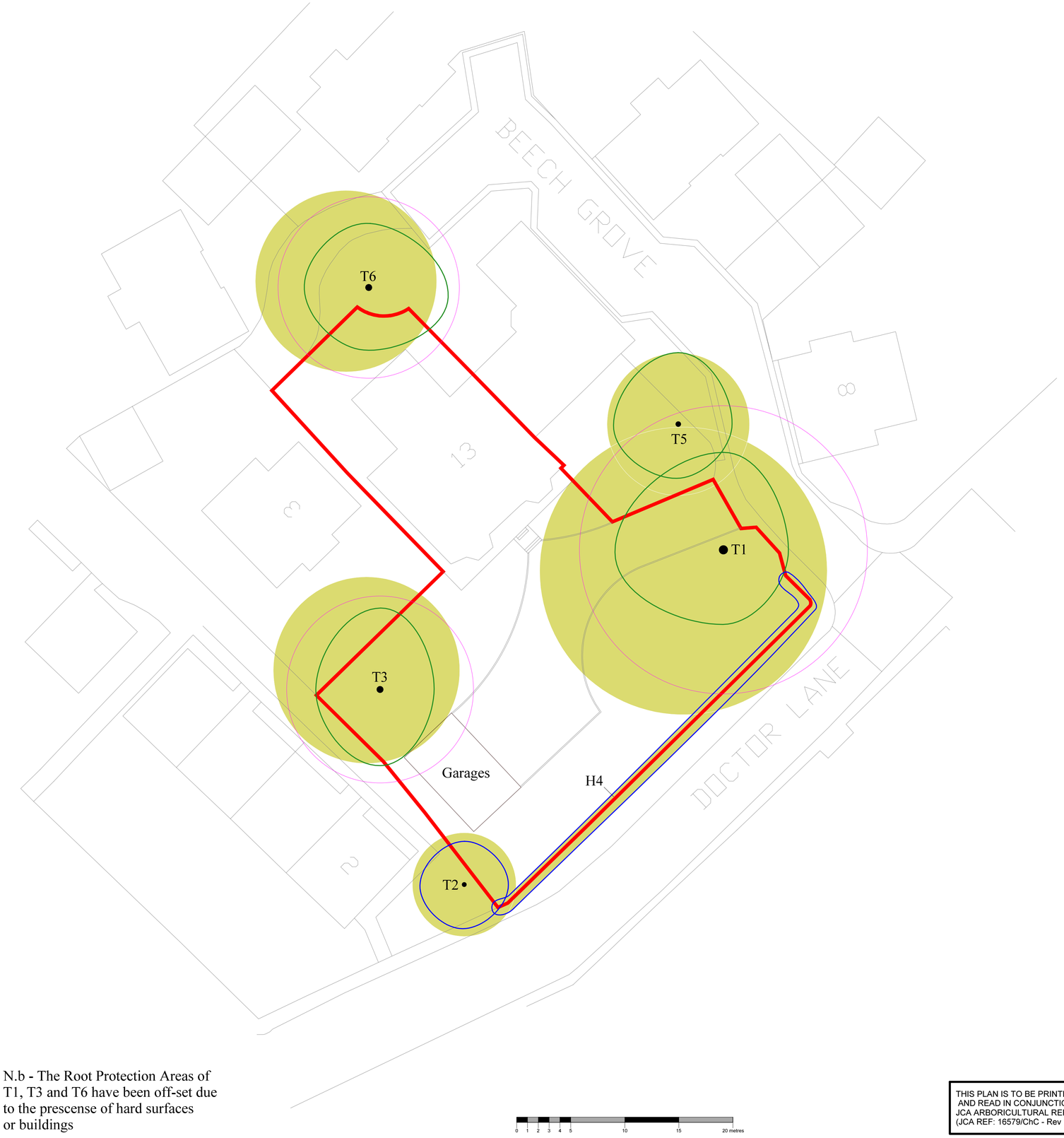

Root Protection Area: RPA

THE ROOT PROTECTION AREA SHOULD IDEALLY REMAIN UNDISTURBED IF THE TREE IS TO BE RETAINED.

THE DEVELOPMENT PROPOSALS SHOULD THEREFORE BE DESIGNED TO AVOID THE RPA OF ANY TREE WHICH IS TO BE RETAINED.

IF IT IS NECESSARY FOR THE DEVELOPMENT TO ENCROACH INTO THE RPA OF A TREE WHICH IS TO BE RETAINED THEN SPECIALIST CONSTRUCTION TECHNIQUES AND MATERIALS MUST BE CONSIDERED.

N.b - The Root Protection Areas of T1, T3 and T6 have been off-set due to the prescense of hard surfaces or buildings

THIS PLAN IS TO BE PRINTED IN COLOUR AND READ IN CONJUNCTION WITH THE JCA ARBORICULTURAL REPORT (JCA REF: 16579/ChC - Rev 1)

Appendix 4: Tree Constraints Plan

ADDRESS: 13 Doctor Lane, Mirfield, West Yorkshire, WF14 8DN.
JCA REF: 16579/ChC - Rev 1

SCALE : 1:200	PAPER SIZE : A1

SURVEYED BY: CC	DRAWN BY: CC	APPROVED BY: TT

BRITISH STANDARD 5837:2012: 4.5 RETENTION CATEGORIES

Detailed definitions of these catagories are at Appendix 2 of our report. N.B. These categories do not necessarily represent or correspond to recommendations for action made in this report.

	CATEGORY A: 'RETENTION MOST DESIRABLE'
	CATEGORY B: 'RETENTION DESIRABLE'
	CATEGORY C: 'TREE WHICH COULD BE RETAINED'
	CATEGORY U: 'TREE FOR REMOVAL'
	STEM OF TREE TO BE RETAINED
	STEM OF TREE TO BE REMOVED
	ROOT PROTECTION AREA
	ROOT PROTECTION AREA (PRIOR TO OFF-SETTING)

JCA Limited

Arboricultural & Ecological Consultants

Default specification for a protective barrier

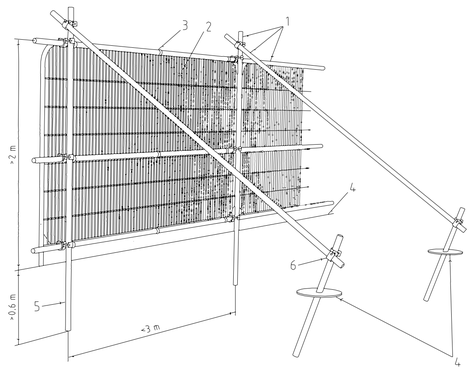

Key

1. Standard scaffold poles
2. Heavy gauge 2m tall galvanized tube and welded mesh infill panels
3. Panels secured to uprights and cross-members with wire ties
4. Ground level
5. Uprights driven into the ground until secure (minimum depth 0.6m)
6. Standard scaffold clamps

An example of a walkway within the RPA

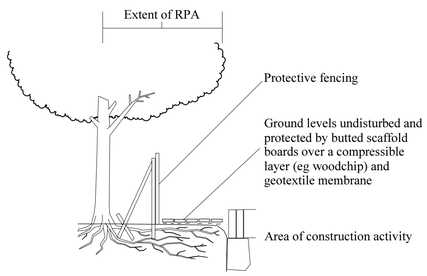

An example of scaffolding within the RPA

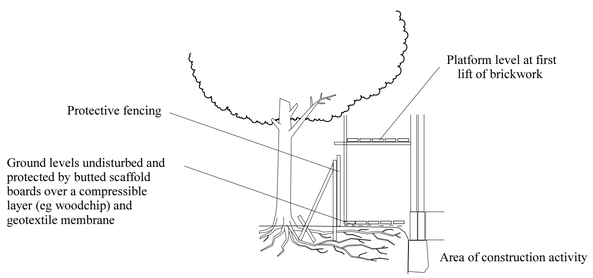

THIS PLAN IS TO BE PRINTED IN COLOUR AND READ IN CONJUNCTION WITH THE JCA ARBORICULTURAL REPORT (JCA REF: 16579/ChC - Rev 1)

TREE PROTECTION MEASURES

THE ROOT PROTECTION AREA (RPA) INDICATES THE AREA WHICH SHOULD BE AVOIDED IF AT ALL POSSIBLE.

UNLESS OTHERWISE STATED IN THE ARBORICULTURAL METHOD STATEMENT, THIS AREA NEEDS TO REMAIN UNDISTURBED.

TO ACHIEVE THIS, PROTECTIVE FENCING WILL BE INSTALLED TO ENCLOSE THE RPA TO MAKE A CONSTRUCTION EXCLUSION ZONE (CEZ);

THIS AREA IS TO BE CONSIDERED A RESTRICTED AREA; NO PEDESTRIANS, VEHICLES, THE STORAGE OF MATERIALS, EQUIPMENT OR MACHINERY ARE ALLOWED WITHIN THE CEZ, UNLESS SPECIFIED WITHIN THE ARBORICULTURAL METHOD STATEMENT.

IT IS IMPORTANT THAT THE PROTECTIVE FENCING IS CHECKED BY THE LPA OR THE ARBORICULTURAL CONSULTANT PRIOR TO ANY CONSTRUCTION WORKS BEING CARRIED OUT. IF THE TREE PROTECTION MEASURES ARE NOT CORRECTLY INSTALLED OR IF THEY DO NOT COMPLY WITH BS 5837: 2012, THIS COULD RESULT IN DAMAGE BEING CAUSED TO TREES AND CONSEQUENTLY A STOP NOTICE MAY BE SERVED BY THE LPA.

Appendix 5: Tree Protection Plan

ADDRESS: 13 Doctor Lane, Mirfield, West Yorkshire, WF14 8DN.
JCA REF: 16579/ChC - Rev 1

SCALE: 1:200	PAPER SIZE : A1

SURVEYED BY: CC	DRAWN BY: CC	APPROVED BY: TT

	TREE TO BE RETAINED
	TREE TO BE REMOVED
	STEM OF TREE TO BE RETAINED
	STEM OF TREE TO BE REMOVED
	ROOT PROTECTION AREA (RPA)
	AREA OF RPA ENCROACHED BY THE DEVELOPMENT. ROOT PRUNING IS CONSIDERED ACCEPTABLE IF EXCAVATIONS IN THESE AREAS ARE REQUIRED. PROTECTIVE FENCING TO PROVIDE ADEQUATE PROTECTION TO THE STEMS AND CANOPIES.
	PROTECTIVE FENCE LINE (CEZ)

JCA Limited

Arboricultural & Ecological Consultants

I hope that this report provides all the necessary information, but should any further advice be needed please do not hesitate to contact the author.

Signed

.....

Charles Cocking *FdSc (Arboriculture) MArborA.*

29th January 2021

For and on behalf of ***JCA Ltd***

Registered Office:

Unit 80
Bowers Mill
Branch Road
Barkisland
Halifax
HX4 0AD

Tel. 01422 376335
Fax. 01422 376232
Email: jon@jcaac.com

www.jcaac.com

Report printed on recycled paper

JCA Ltd. Arboricultural and Ecological Consultants
Professional Tree and Ecology Advice nationwide

ARBORICULTURAL SERVICES

Guidance for Architects and Developers

- British Standard 5837 Tree Surveys
- Arboricultural Implication Assessments (AIA)
- Arboricultural Method Statements (AMS)

Advice for Engineers, Loss Adjusters and Insurers

- Tree Surveys for Subsidence
- Heave Assessment
- Tree Root Identification

Advice for Local Authorities and Social Housing

- Tree Safety Surveys
- Specialist Decay Detection
- Landscape and Orchard Design

Tree Advice for the Legal Profession

- Subsidence Litigation
- Personal Injury and Accident Investigation
- Expert Witness, Planning Inquiries and Appeals

Veteran Tree Management

- Ancient Woodland Management
- Veteran Tree Management

Tree Health and Pest and Disease Management

- Pest and Disease Surveys
- Tree Health Checks
- Disease Mitigation and Control

ECOLOGICAL SERVICES

Ecological Pre-Planning Services

- Phase 1 Habitat Surveys
- Great Crested Newt eDNA Sampling
- Protected Species: Bat, Wintering and Nesting Bird, Badger, Amphibian, Otter, Water Vole, White-Clawed Crayfish, Dormice and Reptile Surveys.
- Preparation for Environmental Impact Assessment (EIA)
- Invasive Species Surveys
- Code for Sustainable Homes

Ecological Post-Planning Services

- Biodiversity Enhancement Plans
- Protected Species Mitigation
- Ecological Management (Bat and Bird box installation and inspection)

HEAD QUARTERS:

Unit 80 Bowers Mill,
Branch Road,
Barkisland,
Halifax, HX4 0AD.

Tel: 01422 376335
Mobile: 07778 391986
Email: jon@jcaac.com
Website: www.jcaac.com

Company Reg No. 05005041
VAT No. 686 4674 78