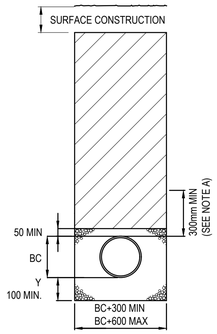

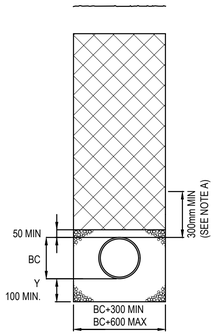

DRAINS WITH FLEXIBLE BED & SURROUND

TYPE 'S'

APPLICABLE UNDER ROADS/SERVICE YARDS WHERE DRAINS HAVE MORE THAN 1200 COVER (IF ADOPTED) OR MORE THAN 600 COVER (IF NOT ADOPTED)

TYPE 'S'

APPLICABLE UNDER FOOTPATHS VERGES AND OTHER NON-TRAFFICKED AREAS WHERE DRAINS HAVE MORE THAN 900 COVER (IF ADOPTED) OR MORE THAN 600 COVER (IF NOT ADOPTED)

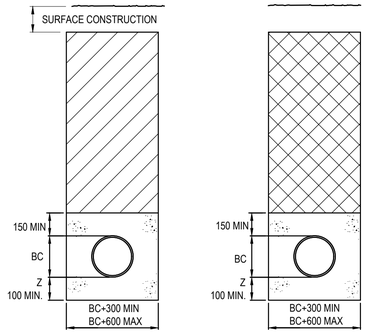

DRAINS WITH CONCRETE BED & SURROUND

TYPE 'Z'

APPLICABLE UNDER ROADS/SERVICE YARDS WHERE DRAINS HAVE LESS THAN 1200 COVER (IF ADOPTED) OR LESS THAN 600 COVER (IF NOT ADOPTED)

TYPE 'Z'

APPLICABLE UNDER FOOTPATHS VERGES AND OTHER NON-TRAFFICKED AREAS WHERE DRAINS HAVE LESS THAN 900 COVER (IF ADOPTED) OR LESS THAN 600 COVER (IF NOT ADOPTED)

BEDDING & TRENCH DETAILS

SCALE 1:20

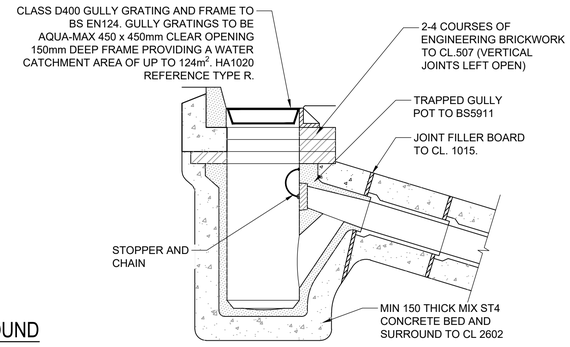

TRAPPED CONCRETE GULLY WITH SPIGOT OUTLET (450x900)

SCALE - 1:20

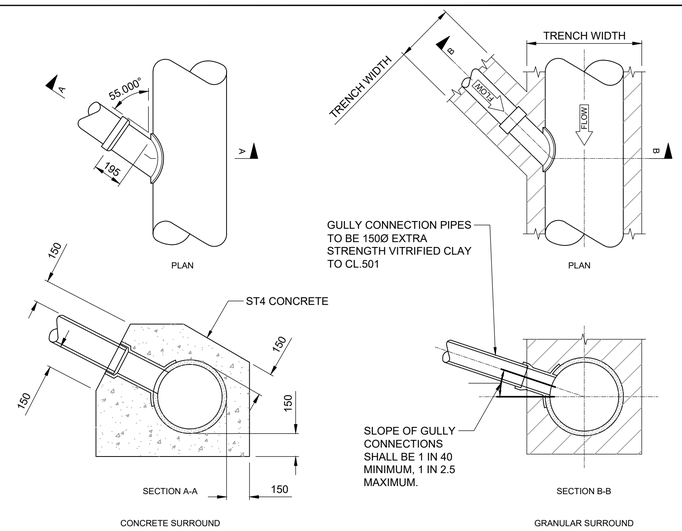

GULLY CONNECTION DETAILS

SCALE - 1:20

KEY

BC	OUTSIDE DIAMETER OF PIPE.
Y	BC/6 OR 100mm UNDER BARRELS AND 50mm MIN. UNDER SOCKETS WHICHEVER IS GREATER (400mm MAX.)
	OR
Z	BC/4 OR 200mm UNDER BARRELS AND 150mm MIN. UNDER SOCKETS WHICHEVER IS GREATER (400mm MAX.) FOR TRENCHES IN HARD MATERIAL.
	EARTHWORKS OUTLINE.
	GRANULAR MATERIAL TO SHW CLAUSE 503.3(i)
	CONCRETE TO SHW CLAUSE 503.3(iii)
	MATERIAL TO SHW CLAUSE 503.3(ii). EXAMPLE: SAND
	CLASS 8 MATERIAL TO SHW CLAUSE 503.3(iv)

GRANULAR MATERIAL	
DIA. OF DRAIN	AGGREGATE
100mm	10mm SINGLE SIZE
150mm	10mm OR 14mm SINGLE SIZE OR 5-20mm GRADED.
225mm-525mm	10mm OR 14mm SINGLE SIZE OR 5-20mm GRADED.
OVER 525mm	10, 14, 20 OR 40mm SINGLE SIZE OR 5-20mm GRADED.

NOTE A
NO MECHANICAL COMPACTION WITHIN 300mm OF CROWN OF PIPE.

NOTE B
WHERE DRAINS ARE LAID UNDER BUILDINGS REFER TO ENGINEER FOR FURTHER DETAILS.

NOTES

1) ALL DIMENSIONS ARE IN MILLIMETRES

2)THIS DRAWING IS TO BE READ IN CONJUNCTION WITH APPENDIX 5/1

3) DIMENSIONS 'BC' IS THE EXTERNAL DIAMETER

4) THE MINIMUM OR MAXIMUM WIDTH OF THE TRENCH APPLIES ON AND BELOW A LINE 300mm ABOVE THE OUTSIDE TOP OF THE PIPE. ABOVE THE 300mm LINE THE TRENCH BACKFILL MATERIAL SHALL BE AS DESCRIBED IN SHW CLAUSE 505

5) THE CONCRETE BED OR SURROUND MAY EXTEND TO THE SIDES OF THE TRENCH OR BE OF MINIMUM WIDTH. CLASS 8 MATERIAL IS TO BE USED TO FILL ANY VOIDS SO FORMED.

6) FOR TYPE Z TRENCH THE CONCRETE COVER MAY BE FORMED TO A RADIUS BATTER OR HORIZONTAL SURFACE. MINIMUM COVER OF CONCRETE SHALL BE 150mm

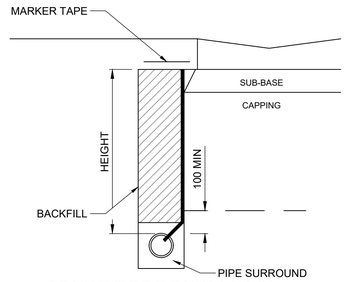

DRAIN TYPE 7 (DRAINS LAID IN NARROW TRENCHES) REFER TO HCD DRAWING F19 & B9

SCALE - 1:20

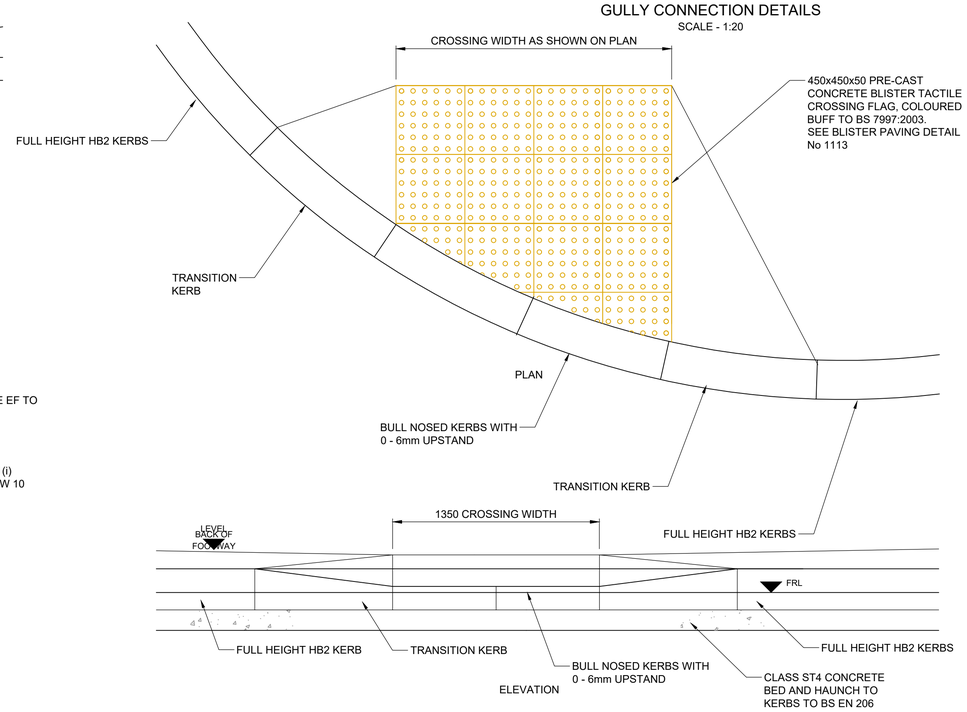

UNCONTROLLED CROSSING ARRANGEMENT

SCALE - 1:20

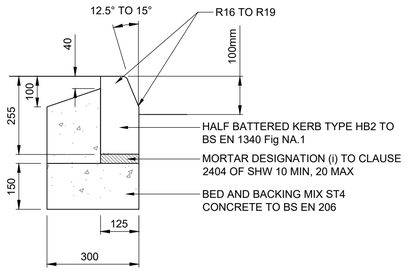

HALF BATTERED KERB (TYPE HB2)

SCALE - 1:10

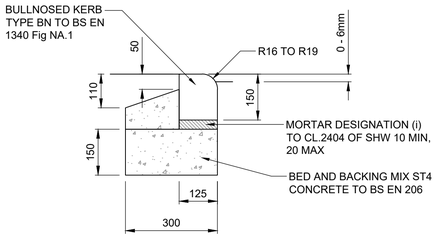

BULL NOSED KERB (TYPE BN)

SCALE - 1:10

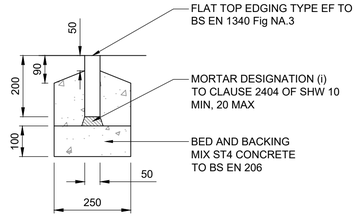

FLAT TOP EDGING (TYPE EF)

SCALE - 1:10

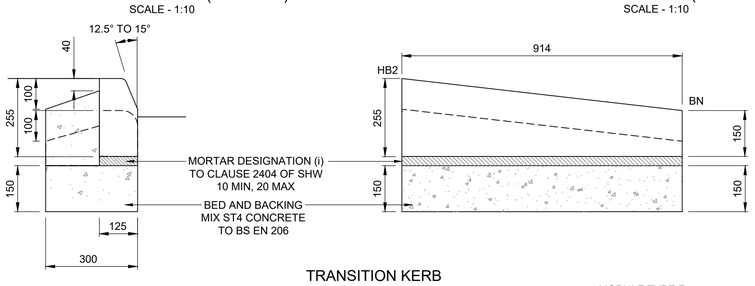

TRANSITION KERB

SCALE - 1:10

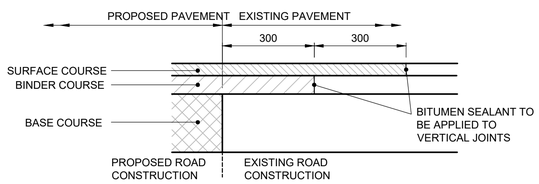

JOINT BETWEEN EXISTING AND PROPOSED CARRIAGEWAY

SCALE - 1:10

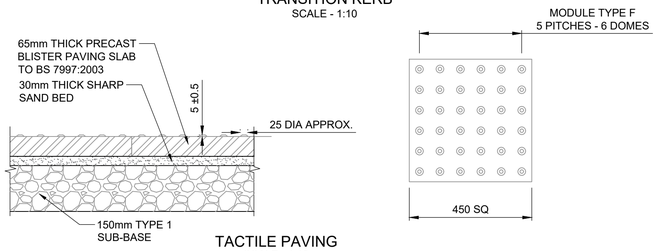

TACTILE PAVING

SCALE - 1:10

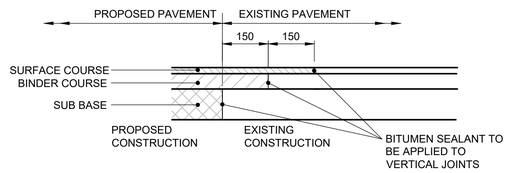

JOINT BETWEEN EXISTING AND PROPOSED FOOTWAY

SCALE - 1:10

PAVEMENT TYPE P1 (CARRIAGEWAY CONSTRUCTION >1.0m WIDE)				
LAYER	SHW CLAUSE	MATERIAL	THICKNESS	SPECIAL REQUIREMENTS
SURFACE	942	THIN SURFACE COURSE	40mm	10mm N.S. AGGREGATE MINIMUM PSV 68. BS EN 13108, PD 6691.
BINDER	906	AC20 DENSE BIN 40/60 REC	70mm	BS EN 13108-1
BASE	906	AC32 DENSE BASE 40/60 REC	285mm	BS EN 13108-1
SUB BASE*	803	GRANULAR MATERIAL TYPE 1	450mm	SUBJECT TO CBR RESULTS
GEOTEXTILE MEMBRANE	-	TENSAR TRIAX T160/TX-G-160 OR SIMILAR	N/A	WHERE POOR GROUND IS ENCOUNTERED. TO BE INSTRUCTED BY ENGINEER

* DCP TEST TO DETERMINE CBR AT PROPOSED BASE OF SUB-GRADE FOR CAPPING DESIGN (OR FORMATION FOR SUB-BASE ONLY DESIGN)

PAVEMENT TYPE F1 (FULL FOOTWAY CONSTRUCTION)				
LAYER	SHW CLAUSE	MATERIAL	THICKNESS	SPECIAL REQUIREMENTS
SURFACE	1105	AC6 DENSE SURF 100/150 PEN (NOT LIMESTONE)	25mm	BS EN 13108-1
BINDER	1105	AC20 DENSE BIN 160/220 REC	60mm	BS EN 13108-1
SUB BASE	803	GRANULAR MATERIAL TYPE 1	150mm	BASED ON 2% CBR
GEOTEXTILE MEMBRANE	-	TENSAR TRIAX T160/TX-G-160 OR SIMILAR	N/A	WHERE POOR GROUND IS ENCOUNTERED. TO BE INSTRUCTED BY ENGINEER

PAVEMENT TYPE P3 (CARRIAGEWAY RESURFACING)				
LAYER	SHW CLAUSE	MATERIAL	THICKNESS	SPECIAL REQUIREMENTS
PLANE OFF EXISTING SURFACE COURSE				
SURFACE	942	THIN SURFACE COURSE	40mm	10mm N.S. AGGREGATE MINIMUM PSV 68. BS EN 13108, PD 6691.
REGULATING	906	AC20 DENSE BIN 40/60 REC	AS REQUIRED	BS EN 13108-1

PAVEMENT TYPE F2 (FOOTWAY RESURFACING)				
LAYER	SHW CLAUSE	MATERIAL	THICKNESS	SPECIAL REQUIREMENTS
PLANE OFF EXISTING 20mm SURFACE COURSE				
SURFACE	1105	AC6 DENSE SURF 100/150 PEN (NOT LIMESTONE)	25mm	BS EN 13108-1
REGULATIN G COURSE	1105	AC20 DENSE BIN 160/220 REC	AS REQUIRED	BS EN 13108-1

PAVEMENT TYPE F3 (CONCRETE MARGIN)				
LAYER	SHW CLAUSE	MATERIAL	THICKNESS	SPECIAL REQUIREMENTS
SURFACE	1105	UNREINFORCED CONCRETE C32/40	150mm	BS EN 13877-1 (SHW CLAUSE 1001) EXPANSION JOINTS REQUIRED EVERY 5m REFER TO MCHW/VOL 3/SERIES C/DWG. C2
SUB BASE	803	GRANULAR MATERIAL TYPE 1	150mm	BASED ON 2% CBR

NOTES

1) ALL DIMENSIONS ARE IN METRES UNLESS STATED OTHERWISE
2) ALL WORK IS TO BE CARRIED OUT IN ACCORDANCE WITH THE SPECIFICATION FOR HIGHWAY WORKS AND LOCAL AUTHORITY GUIDANCE
3) UNDERGROUND SERVICES ARE PRESENT IN THE AREA. CONTRACTOR IS TO CONFIRM THE PRECISE LINE AND DEPTH OF ANY SERVICES PRIOR TO THE COMMENCEMENT OF ANY EXCAVATION WORKS
4) FOR DETAILS OF PAVEMENT BUILD UPS REFER TO DRAWING NUMBER 20804/D/009
5) FOR TYPICAL SECTIONS REFER TO DRAWING NUMBER AMA/20804/D/011
6) ANALYSIS OF THE CARRIAGEWAY CONSTRUCTION SHALL TAKE PLACE TO DETERMINE WHAT OPTION IS TO BE ADOPTED. ALL TESTS WILL BE SCHEDULED WITHIN THE PROGRAMME OF WORKS FOR THE SCHEME
7) IN CARRIAGEWAY WIDENING AREAS LESS THAN 1.0m WIDE REPLACE BASE AND SUB-BASE WITH 350mm ST4 CONCRETE
8) DCP TEST TO BE CARRIED OUT IN ADVANCE OF THE WORKS TO CONFIRM THE SUITABILITY OF PAVEMENT CONSTRUCTION. THE PAVEMENT DESIGN SHALL BE CONFIRMED AFTER ASSESSING AND REVIEWING SUB-GRADE CBR VALUES, POST DCP TEST

REVISIONS

REV	DESCRIPTION	DATE	BY
-	FIRST ISSUE	16/09/20	TS
A	UPDATED FOLLOWING RECEIPT OF ATKINS AS BUILT INFORMATION	05/11/20	TS
B	UPDATED FOLLOWING LA COMMENTS	16/02/21	TS
C	UPDATED FOLLOWING ADDITIONAL COMMENTS	14/01/22	TS
D	NOTE ADDED TO P1	22/02/22	AJA
E	UPDATED FOLLOWING COMMENTS	18/03/22	AJA
F	GULLY CONNECTION SPECIFICATION UPDATED	06/05/22	AJA
G	CONCRETE MARGIN SPECIFICATION ADDED	20/06/22	AJA
H	NOTES UPDATED	05/07/22	AJA
I	NOTES UPDATED	07/07/22	AJA
J	NOTES UPDATED	29/07/22	AJA

ANDREW MOSELEY ASSOCIATES
ENVIRONMENTAL AND DEVELOPMENT PLANNERS CONSULTANTS

Project: BRADFORD ROAD CHAINBAR ROUNDABOUT

Client: OPUS LANE (NORTH) LTD

Drawing: SECTION 278 WORKS STANDARD DETAILS

Drawn By: TS | Date: 14/09/2020

Checked: RC | Scale: AS SHOWN @ A1

Drawing No: AMA/20804/D/009 | Rev: J