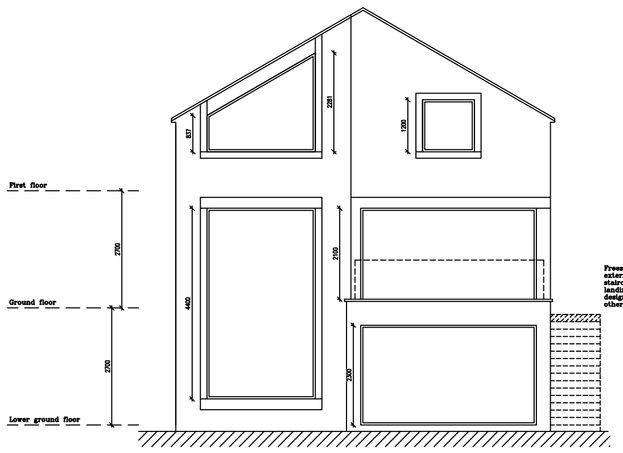

1:100 Rear elevation
as Proposed

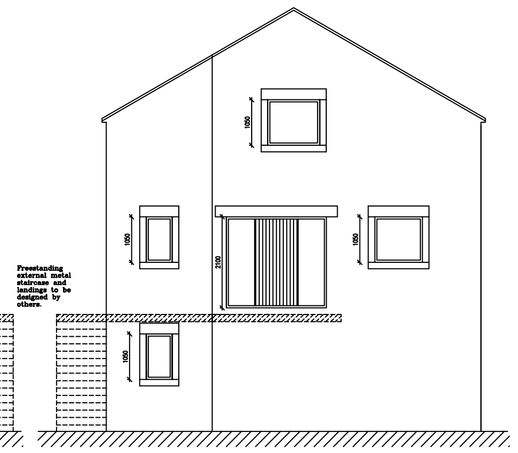

Front elevation
as Proposed

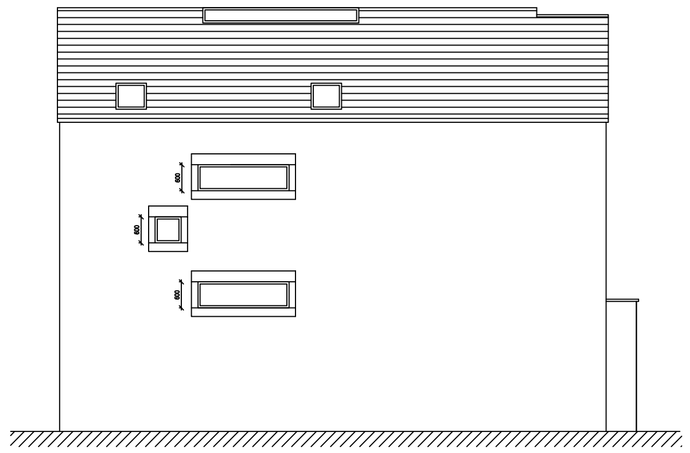

Side elevation
as Proposed

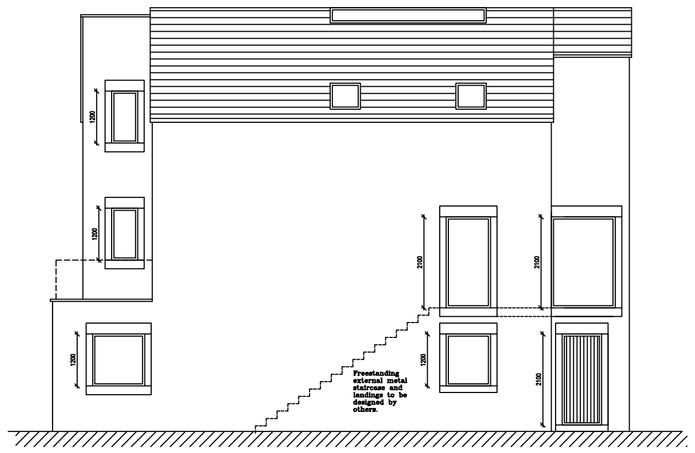

Side elevation
as Proposed

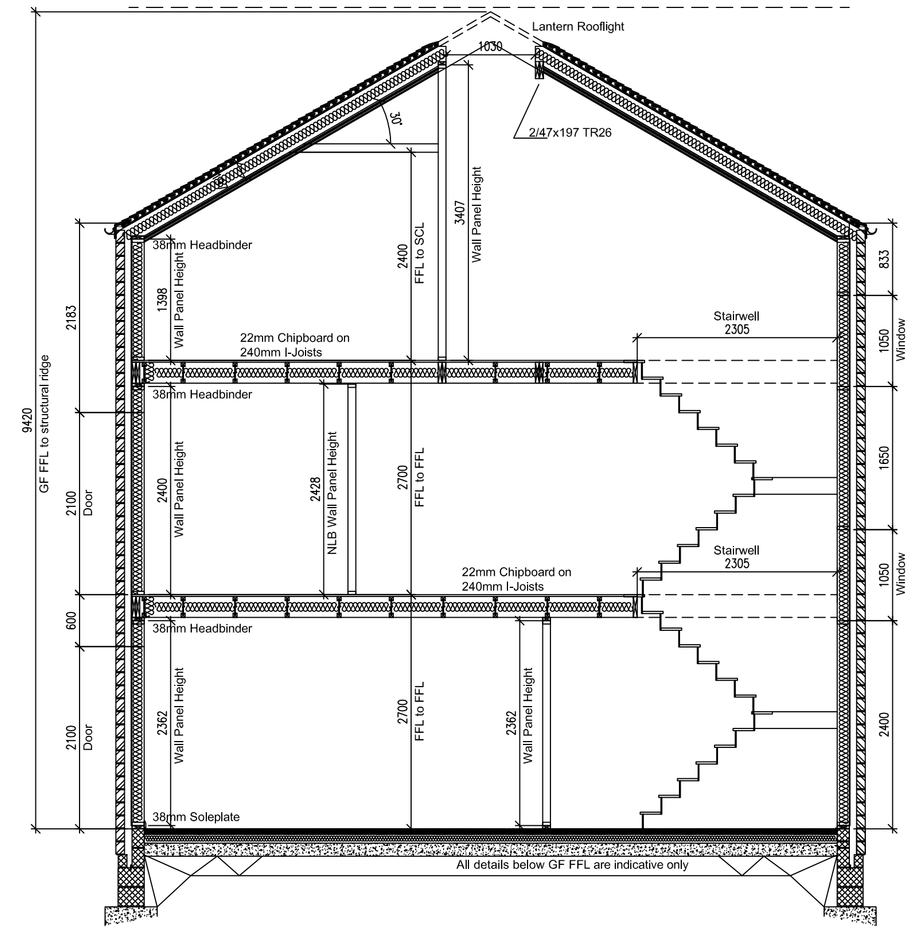

Section A-A
1:50

NTS

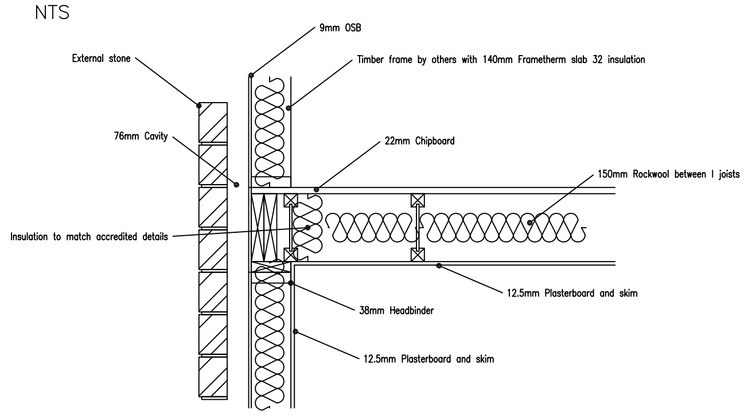

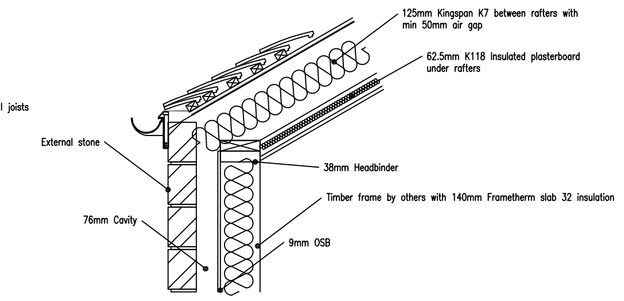

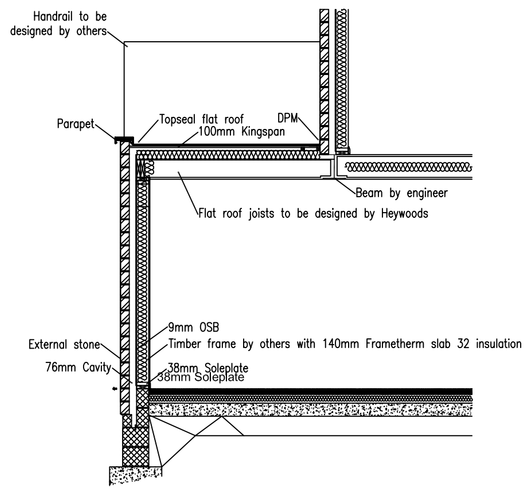

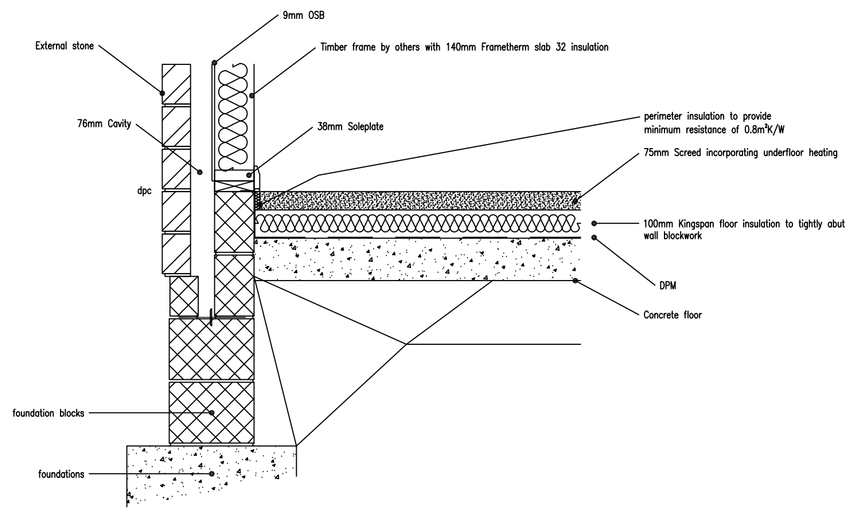

REVISION	DATE	DESCRIPTION

NOTE TO CLIENT : BRICK & BLOCK ON SECTION FOR ILLUSTRATIVE PURPOSES ONLY. DO NOT COUNT BRICKS & BLOCKS

Note to Client : These works will be subject to CDM Legislation
Note to client : If CIL applies,
Client must complete CIL form 6 commencement notice and send to council. Then within 6 months of finishing client must fill in form 7 part 2 and send to council
WARNING failure to do this may lead to CIL charges even if claimed exemption.

Note to CONTRACTOR

Check all dimensions prior to commencing works or ordering any materials Do not Scale

On no account are any works whatsoever including foundations to be undertaken outside the boundary of the site without the express permission of the adjoing owner

Note to CLIENT

It is your responsibility to check with the Statutory Authorities where all the services, particularly those outside the property are located, and to advise the Contractor accordingly, prior to accepting his quotation for the works Note, this may have both cost and safety issues

APPROVAL	DATE	DRAWING	AUTHORITY	REFERENCE NO
Building Regulations				
Planning Approval				
Planning Submission				

Unit 2, The Office Campus, Paragon
Business Park, Red Hall Court,
Wakefield, WF1 2UY

Project Proposed 2 houses
at Willow Grove Cliff Road Holmfirth

01924 380873

Date 05/11/2019

Drawing
Plot 2
Elevations section and details

CHARTERED ARCHITECTS
NEIL BOWEN
R.I.B.A.

A1

F	Scale
2169	
R	1:50 1:100
2	

Drg No