Discharge of Listed Building Consent Conditions: Huddersfield Station

2021/65/91328 Condition 4 (Platform Fixtures and Fittings)

Document reference: 151667-TSA-00-TRU-REP-W-EN-001993

Network Rail

November 2025

This page is intentionally left blank

Contents

1. INTRODUCTION 5
1.1 Background 5
2. INFORMATION INCLUDED IN THIS SUBMISSION 7
3. CONDITION 4: PLATFORM FIXTURES AND FITTINGS 8
3.1 Overview 8
3.2 CCTV 8
3.3 Public Address System 15
3.4 Customer Information Screens 19
3.5 Waiting Shelters 20
3.6 Lighting 21
3.7 Weather Screens 24
3.8 Station Signage 25
3.9 Platform Surfacing 26
3.10 Additional Items 27
APPENDIX A.1 – ARCHITECTURAL GENERAL ARRANGEMENTS 32
APPENDIX A.2 – STATION INFORMATION, SECURITY SYSTEM AND LIGHTING GENERAL ARRANGMENT 33
APPENDIX A.3 – ARCHITECTURAL DETAILS 34

Tables

Table 1-1 - Document phasing summary 5
Table 2-1 Details of condition included in this application 7
Table 3-1 - CCTV Camera Types 9
Table 3-2 - CCTV Summary of location, fixing and camera types – See Appendix A.2 for corresponding plan 13
Table 3-3 – Public Address System Summary – See Appendix A.2 for corresponding plan 18
Table 3-4 – Indicative appearance of proposed luminaire types 22
Table 3-5 - Summary of signage shown in drawings included in Appendix A 25
Table 3-6 - Proposed Platform Surfacing Materials 26

Inserts

Insert 3-1 - Huddersfield Station Platform schematic 8

Insert 3-2 - Detail of girder mounting clamps 9

Insert 3-3 - Wall mounted CCTV detail 10

Insert 3-4 - Ceiling mounted CCTV detail 10

Insert 3-5 - Proposed single and triple camera columns 11

Insert 3-6 - Indicative image of multifunction totem 12

Insert 3-7 - Indicative render of proposed multifunction totem on platform 2 12

Insert 3-8 - Indicative photo of proposed loudspeakers 15

Insert 3-9 - Detail of proposed beam speaker fixing arrangement 16

Insert 3-10 - Detail of proposed wall mounted speakers 16

Insert 3-11 - Detail of proposed column mounted speakers 17

Insert 3-12 - Detail of proposed column mounted speakers on Platform 2 over Span 1 (John William Street Bridge) of Huddersfield Viaduct. 18

Insert 3-13 - Proposed gallows post and screen (left) and indicative isometric view of totem with integrated customer information screen (right) 20

Insert 3-14 - Photo showing existing customer information screen on future platform 1, attached to Penistone Line Canopy to be renewed 20

Insert 3-15 - Isometric view of proposed waiting shelter 21

Insert 3-16 - Isometric view of proposed weather screens 24

Insert 3-17 - Indicative render of proposed weather screen 25

Insert 3-18 - Isometric view of proposed bench design 27

Insert 3-19 - Indicative photo of equivalent benches used in grade I listed St Pancras Station (NHLE 1342037) 28

Insert 3-20 - Isometric view of proposed Cycle Shelter 29

Insert 3-21 - Proposed post mounted AFIL 30

Insert 3-22 - Indicative photo of a customer help point supported by a pedestal post 31

1. INTRODUCTION

1.1 Background

1.1.1 The Scheme is part of a wider programme of works under the Trans-Pennine Route Upgrade (TRU) which will improve the Trans-Pennine railway between Manchester, Huddersfield, Leeds and York and improve connections between key towns and cities across the north of England.

1.1.2 The section of the programme comprising improvements between Huddersfield and Westtown (Dewsbury) is being delivered through The Network Rail (Huddersfield to Westtown (Dewsbury) Improvements) Order (herein referred to as the 'Order Scheme'). Planning Direction was received from the Department for Transport referenced TWA/21/APP/03, dated 13 October 2022 and the TWAO came into force on the 3 November 2022. The works approved via this Order required alterations to Huddersfield Station, and a Listed Building Consent Application referenced 2021/65/91328 was granted as directed by the Secretary of State for the Department of Levelling Up, Housing and Communities on 27 June 2022. This was approved subject to a number of conditions.

1.1.3 This submission sets out details in relation to Condition 4 of the approved Listed Building Consent for the works. This document has been prepared to support the partial discharge of this condition.

1.1.4 The approach to discharging this condition in two stages reflects the complexity of the wider project and the need to align approvals with the design and construction programme. By adopting a phased submission, the project can progress without delay while ensuring that all elements are fully detailed and agreed prior to implementation. The below table outlines the scope of each submission in relation to the platform fixtures and fittings specifically mentioned in the condition wording. It is anticipated that the design principles established in Phase 1 will largely be consistent with that presented in Phase 2. This document comprises Phase 1 of discharging this condition.

Table 1-1 - Document phasing summary

Item	Phase 1	Phase 2
CCTV	Platforms 1 & 2	Platforms 3/4 & 5/6
Public address system	Platforms 1 & 2	Platforms 3/4 & 5/6
Customer Information Screens	Platforms 1 & 2	Platforms 3/4 & 5/6
Waiting Shelters	Platforms 3/4 & 5/6	N/A
Lighting	Platforms 1 & 2	Platforms 3/4 & 5/6
Weather Screens	Platforms 3/4 & 5/6	N/A
Station Signage	Platforms 1 & 2	Platforms 3/4 & 5/6
Platform Surfacing	Platforms 1 & 2	Platforms 3/4 & 5/6
Additional Items - Benches - Cycle Shelter	Benches: All platforms Cycle Shelter, Retail Unit, Audio Frequency Induction	Audio Frequency Induction Loop, Help Points: Platforms 3/4 & 5/6

- Retail Unit - Audio Frequency Induction Loop - Help Points	Loop, Help Points: Platforms 1 & 2	

1.1.5 The station is a designated heritage asset of significant historic and architectural value, and its setting and character are central considerations in the design process. Platform fixtures and fittings form an important part of the station's historic environment, as well as vital elements of the day-to-day operation of the station for staff and passengers. This submission addresses those aspects of the condition relevant to the current phase of works, providing sufficient detail to allow informed assessment against statutory and policy requirements. A subsequent application will follow to discharge the remaining elements once their design has been finalised, with full remaining details contained within this Phase 2 document.

2. INFORMATION INCLUDED IN THIS SUBMISSION

2.1.1 The wording of the condition is reproduced in Table 2-1, along with a brief overview of the information submitted in order to discharge the relevant condition.

Table 2-1 Details of condition included in this application

Condition reference	Details of condition	Section reference and Material Submitted
4	Details of new platform fixtures and fittings, including close circuit television, public address system, customer information screens, waiting shelters, lighting, weather screens, station signage and platform surfacing, shall be submitted to and agreed in writing with the local planning authority. The proposed works shall be carried out in accordance with these approved details unless otherwise agreed in writing by the local planning authority. Reason: To control the introduction of modern features onto the historic environment in an appropriate and sympathetic manner.	Section 3 This section outlines the proposed platform fixtures and fittings, detailing the design, location, and installation methods for the items named in the condition wording, as well as providing details of the proposed additional items comprising: benches, cycle shelters, retail unit, audio frequency induction loops, and help points. Appendix A.1 Architectural General Arrangement Appendix A.2 Station information and security systems (SISS) General Arrangement Appendix A.3 Architectural Details

3. CONDITION 4: PLATFORM FIXTURES AND FITTINGS

3.1 Overview

3.1.1 This document encompasses the range of proposed new fixtures and fittings across the station platforms. As part of the wider Listed Building Consent condition discharge process, a Conservation Implementation Management Plan (CIMP) with accompanying Design Guide has been produced to discharge Condition 5, with these documents produced to inform the design of new elements and to administer the approval of detailed design by the Local Planning Authority. The detail outlined within this application document is consistent with the content of these two other related documents.

3.1.2 As part of the TRU works, the Huddersfield Station platform numbering is being updated. References to platform numbers follow the new numbering system throughout, with the extent of each platform shown below in Insert 3-1.

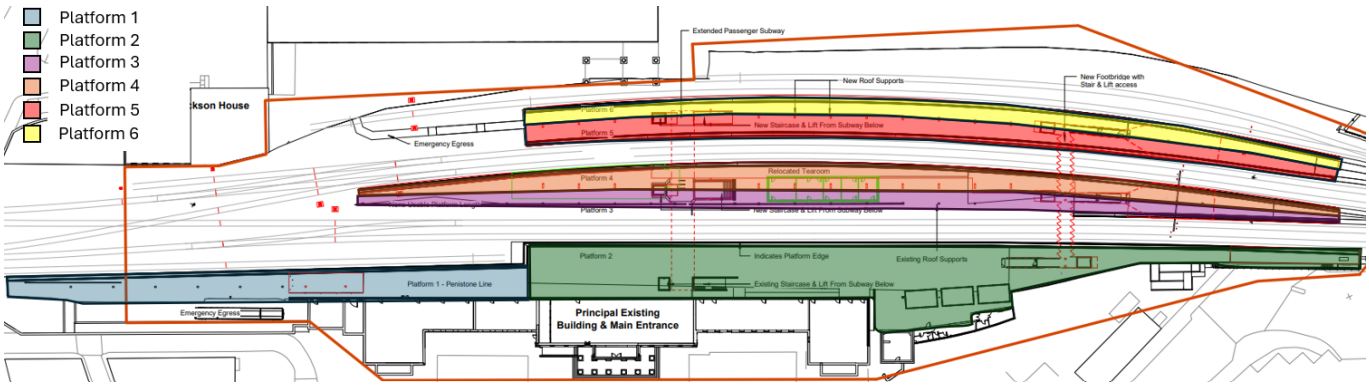

Insert 3-1 - Huddersfield Station Platform schematic

3.2 CCTV

<u>Platforms 1 & 2 and Footbridge</u>

3.2.1 The inclusion of CCTV in the station environment is vital for public safety, crime prevention, passenger confidence, operational monitoring, staff safety and compliance and accountability with regulations. The positioning and number of CCTV equipment is dictated by the requirement to achieve sufficient coverage across the station. Consideration has been given to sensitively integrating the proposed equipment into the historic environment of the station, whilst ensuring it still achieves its operational aims.

3.2.2 The following section will outline the appearance of proposed cameras, range of fixing methodologies, and proposed location of this equipment.

3.2.3 Table 3-1 shows the type of cameras proposed to be installed in the station. Table 3-2 provides an overview of the proposed CCTV equipment with drawing 151667-TSA-W3-MVL3-DRG-R-TL-135010 (Appendix A.2) depicting the location of all proposed equipment.

Camera Types

3.2.4 The CCTV cameras proposed for installation at Huddersfield Station are standard dome cameras. These cameras are compact and discreet, making them well-suited to sensitive heritage environments. Their discrete design and widespread use in public settings mean they are visually unobtrusive and unlikely to detract from the character of the station. Their positioning avoids key architectural features and, where feasible, non-invasive installation methods are proposed. The proposed cameras provide essential security coverage with minimal impact on the historic fabric or aesthetic value of the building.

Table 3-1 - CCTV Camera Types

Station area	Model	Image
Various	Fixed dome camera	
Lift Car	Fixed mini dome camera	

Method of Fixing

3.2.5 Consideration has been given to minimise the impact on historic fabric that could arise from the installation of the required CCTV equipment. The proposed method of fixing will depend on the location of the proposed equipment, for example whether mounted to a wall, girder or to an ancillary structure.

3.2.6 Those cameras proposed to be mounted to girders will use clamps extending around the bottom flange, representing a system which is entirely reversible without impact to historic fabric. Insert 3-2depicts the proposed method of fixing cameras to girders.

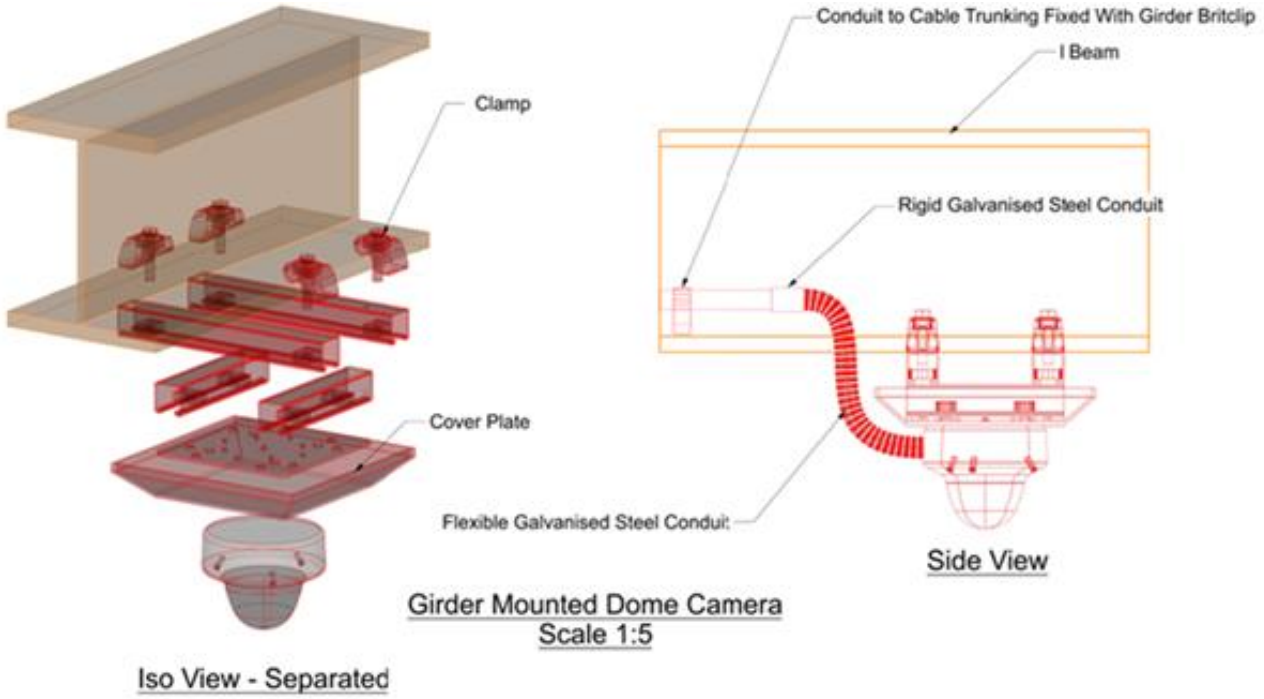

Insert 3-2 - Detail of girder mounting clamps

3.2.7 Where cameras are proposed to be wall mounted, this would be achieved using the manufacturer-supplied mounting plate, requiring four screws to secure each camera to the wall. In cases where the camera would be over 2.5m above floor level, flexible galvanized

conduit to house cabling feeding the camera would be required. Where the camera would be less than 2.5m above floor level, a rigid conduit is specified to ensure a greater level of mechanical protection is provided in these areas where there is a greater risk of impact to the conduit.

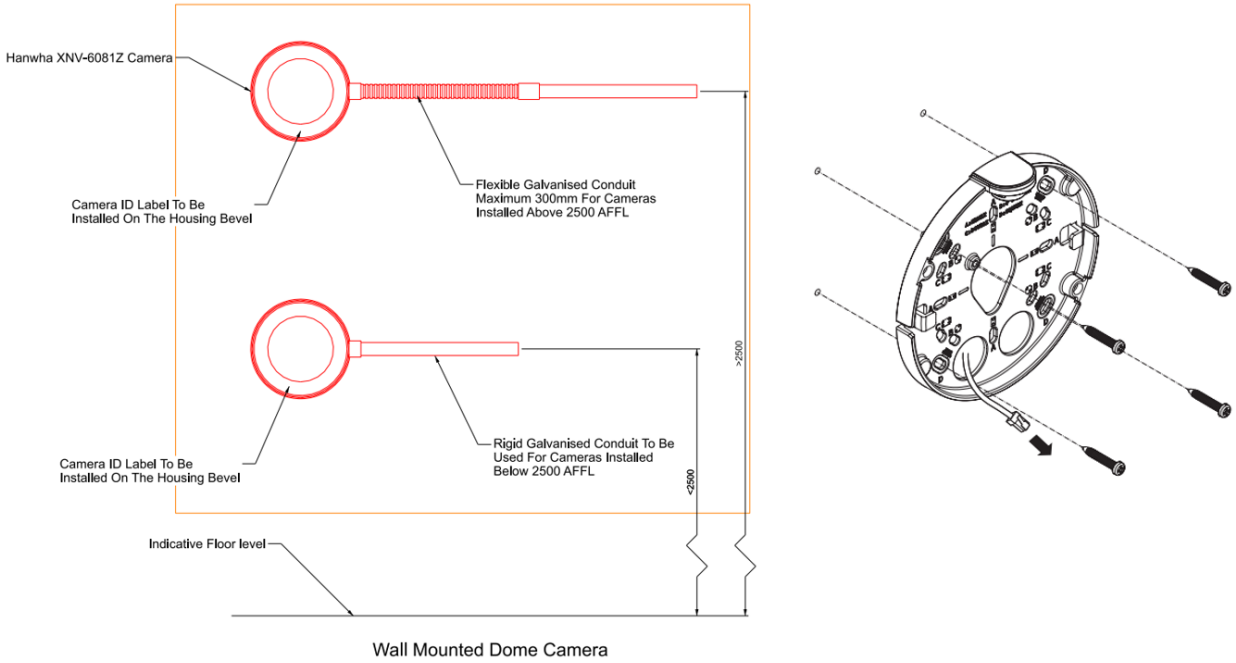

Insert 3-3 - Wall mounted CCTV detail

3.2.8 In the waiting shelter, footbridge and cycle hub, cameras will be mounted flush to the ceiling. Cabling will run in service void concealed behind ceiling finishes. Ceiling mounting is proposed in modern structures without historic fabric, and result in a neat unobtrusive finish. This installation method would therefore not adversely affect the significance of the listed building.

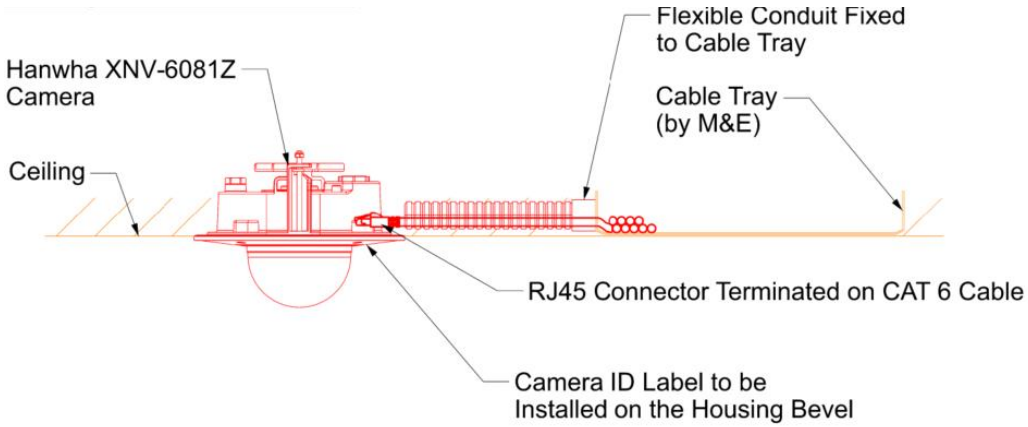

Insert 3-4 - Ceiling mounted CCTV detail

3.2.9 It is proposed that a column with single swan neck be situated between the Penistone Line canopy and adjacent retaining wall to accommodate a camera required in the location, and a column with a triple swan neck accommodating three cameras to the northern end of platform 2, adjacent to the fire escape (see Insert 3-5 below). In order to sympathetically integrate with the wider colour scheme used across the station, the columns will be painted Anthracite Grey RAL 7016.

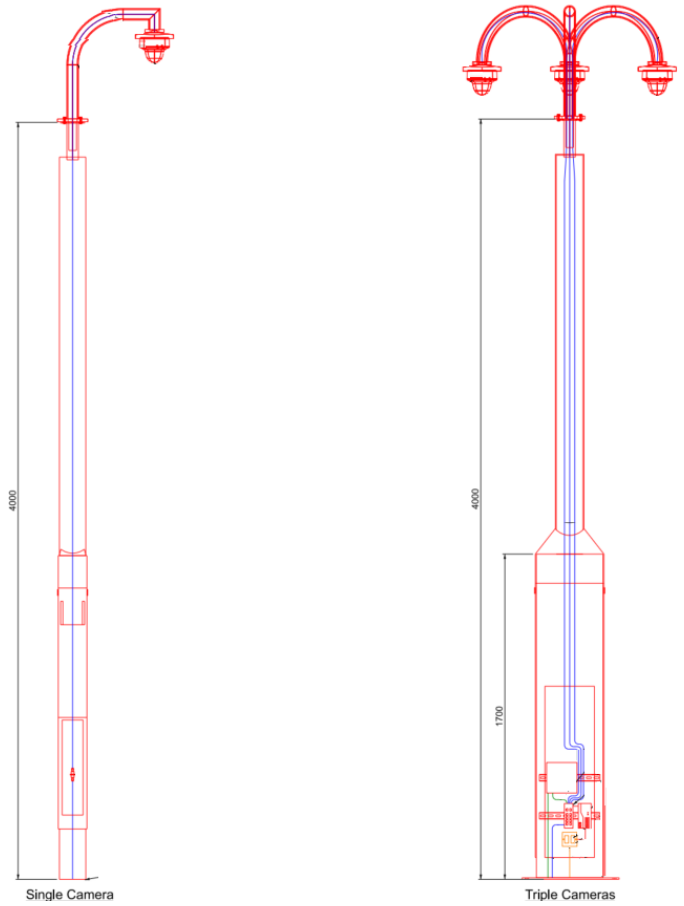

Insert 3-5 - Proposed single and triple camera columns

3.2.10 It is proposed that eight cameras would be mounted on bespoke multifunctional totems situated along platform 2. Alongside CCTV cameras, the proposed totems would accommodate signage and customer information screens. These contemporary multifunctional fixtures would deliver efficient improvements to customer experience while facilitating the required camera coverage without adversely impacting the significance of the station. Insert 3-6 below shows the indicative appearance of the proposed totems.

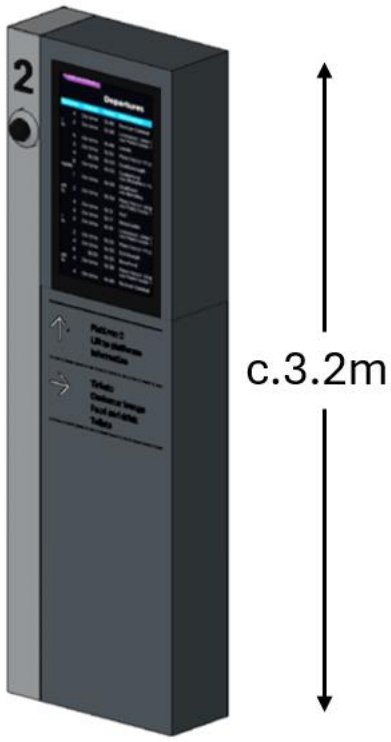

Insert 3-6 - Indicative image of multifunction totem

Insert 3-7 - Indicative render of proposed multifunction totem on platform 2

Table 3-2 - CCTV Summary of location, fixing and camera types – See Appendix A.2 for corresponding plan

Camera	Fixing Type	Camera Type	Location
HUD-CAM-101	Girder Mounted	Dome 180 mm diameter x 125 mm height	Platform 1
HUD-CAM-102	Single swan neck on column	Dome 180 mm diameter x 125 mm height	Platform 1 Manchester End
HUD-CAM-103	Girder Mounted	Dome 180 mm diameter x 125 mm height	Platform 1
HUD-CAM-104	Girder Mounted	Dome 180 mm diameter x 125 mm height	Platform 1
HUD-CAM-105	Girder Mounted	Dome 180 mm diameter x 125 mm height	Platform 1
HUD-CAM-106	Installed on bespoke multifunction totem 1 (HUD-TOT-101)	Dome 180 mm diameter x 125 mm height	Platform 2
HUD-CAM-107	Installed on bespoke multifunction totem 3 (HUD-TOT-103)	Dome 180 mm diameter x 125 mm height	Platform 2
HUD-CAM-108	Installed on bespoke multifunction totem 3 (HUD-TOT-103)	Dome 180 mm diameter x 125 mm height	Platform 2
HUD-CAM-109	Wall mounted	Dome 180 mm diameter x 125 mm height	Platform 2
HUD-CAM-110	Installed on bespoke multifunction totem 4 (HUD-TOT-104)	Dome 180 mm diameter x 125 mm height	Platform 2
HUD-CAM-111	Installed on bespoke multifunction totem 5 (HUD-TOT-105)	Dome 180 mm diameter x 125 mm height	Platform 2
HUD-CAM-112	Installed on bespoke multifunction totem 5 (HUD-TOT-105)	Dome 180 mm diameter x 125 mm height	Platform 2
HUD-CAM-113	Ceiling mounted	Dome 180 mm diameter x 125 mm height	Platform 2, Waiting Room
HUD-CAM-114	Ceiling mounted	Dome 180 mm diameter x 125 mm height	Platform 2, Cycle Hub 1
HUD-CAM-115	Ceiling mounted	Dome 180 mm diameter x 125 mm height	Platform 2, Cycle Hub 2
HUD-CAM-116	Girder end of station building	Dome 180 mm diameter x 125 mm height	Platform 2
HUD-CAM-117	Platform 2 building wall	Dome 180 mm diameter x 125 mm height	Platform 2
HUD-CAM-118	Installed on bespoke multifunction totem 7 (HUD-TOT-107)	Dome 180 mm diameter x 125 mm height	Platform 2
HUD-CAM-119	Platform 2 lift tower side	Dome 180 mm diameter x 125 mm height	Platform 2

HUD-CAM-120	Platform 2 lift tower side	Dome 180 mm diameter x 125 mm height	Platform 2
HUD-CAM-121	Triple swan neck column	Dome 180 mm diameter x 125 mm height	Platform 2 Leeds End beyond footbridge
HUD-CAM-122	Triple swan neck column	Dome 180 mm diameter x 125 mm height	Platform 2 Leeds End beyond footbridge
HUD-CAM-123	Triple swan neck column	Dome 180 mm diameter x 125 mm height	Platform 2 Leeds End beyond footbridge
HUD-CAM-124	Viaduct parapet, Leeds end	Dome 180 mm diameter x 125 mm height	Platform 2 – Viaduct Span 1
HUD-CAM-501	Installed on bespoke multifunction totem 7 (HUD-TOT-107)	Dome 180 mm diameter x 125 mm height	Platform 2
HUD-CAM-502	Ceiling mounted	Dome 180 mm diameter x 125 mm height	Footbridge top of Platform 2 stairs
HUD-CAM-503	Canopy mounted	Dome 180 mm diameter x 125 mm height	Platform 2 Lift canopy
HUD-CAM-504	Footbridge lift car ceiling	MiniDome 100 mm diameter x 52 mm height	Platform 2 lift car
HUD-CAM-505	Footbridge lift car ceiling	MiniDome 100 mm diameter x 52 mm height	Platform 2 lift car
HUD-CAM-506	Ceiling mounted	Dome 180 mm diameter x 125 mm height	Footbridge top of Platform 2 stairs
HUD-CAM-507	Ceiling mounted	Dome 180 mm diameter x 125 mm height	Footbridge top of Platform 2 stairs
HUD-CAM-508	Ceiling mounted	Dome 180 mm diameter x 125 mm height	Footbridge deck
HUD-CAM-509	Ceiling mounted	Dome 180 mm diameter x 125 mm height	Footbridge deck
HUD-CAM-510	Ceiling mounted	Dome 180 mm diameter x 125 mm height	Footbridge deck
HUD-CAM-511	Ceiling mounted	Dome 180 mm diameter x 125 mm height	Footbridge top of Platform 3/4 stairs
HUD-CAM-512	Ceiling mounted	Dome 180 mm diameter x 125 mm height	Footbridge top of Platform 3/4 stairs
HUD-CAM-513	Ceiling mounted	Dome 180 mm diameter x 125 mm height	Under footbridge finger canopy
HUD-CAM-514	Canopy mounted	Dome 180 mm diameter x 125 mm height	Platform 3/4 Lift canopy
HUD-CAM-515	Footbridge lift car ceiling	Mini Dome 100 mm diameter x 52 mm height	Platform 3/4 footbridge lift car
HUD-CAM-516	Footbridge lift car ceiling	Mini Dome 100 mm diameter x 52 mm height	Platform 3/4 footbridge lift car
HUD-CAM-524	Ceiling mounted	Dome 180 mm diameter x 125 mm height	Footbridge top of Platform 2 stairs

HUD-CAM-529	Wall mounted	Dome 180 mm diameter x 125 mm height	Platform 2 footbridge stairs
HUD-CAM-530	Wall mounted	Dome 180 mm diameter x 125 mm height	Platform 2 motor room wall
HUD-CAM-531	Wall mounted	Dome 180 mm diameter x 125 mm height	Platform 3/4 footbridge stairs
HUD-CAM-532	Wall mounted	Dome 180 mm diameter x 125 mm height	Platform 3/4 motor room wall

3.3 Public Address System

3.3.1 As part of the proposed infrastructure, the public address (PA) system plays a key role in ensuring the safe and efficient operation of the railway environment. It facilitates clear and timely communication of travel information, including announcements regarding train arrivals, departures, and service disruptions, whilst also supporting emergency procedures and accessibility for all users. The placement of speakers within the station is informed by a range of parameters, including passenger flow, ambient noise levels and architectural acoustics. These considerations ensure that announcements are audible and comprehensible throughout the station, contributing to both operational effectiveness and the overall passenger experience.

Platforms 1 and 2

3.3.2 A total of 46 speakers are proposed to be located along platforms 1 and 2. Their proposed location is shown on Huddersfield Station Pack 1 SISS Telecoms General Arrangement Platforms 1&2 (151667-TSA-W3-MVL3-DRG-R-TL-135010) (Appendix A.2) with an overview presented below in

3.3.3 Table 3-3.

3.3.4 The type of loudspeaker proposed is depicted below in Insert 3-8, which can be fixed via multiple methods. The speaker measures 140mm in diameter and 191mm in depth, finished in off-white RAL9016.

Insert 3-8 - Indicative photo of proposed loudspeakers

3.3.5 Consideration has been given to minimise the impact on historic fabric that could arise from the installation of the required public address system equipment. The proposed method of fixing will depend on the location of the proposed equipment, for example whether mounted to a wall, girder or to an ancillary structure

3.3.6 It is proposed that clamps would be used to attach speakers to beams, where this is feasible.

This method of attachment is completely reversible, following the same principle as outlined in paragraph 3.2.6 for the installation of CCTV cameras. Insert 3-9 shows the proposed arrangement for fixing speakers to beams across Platform 1. It is proposed that 12 of the speakers be attached to walls, with Insert 3-10 showing the proposed configuration for that approach. Seven speakers are proposed to be column mounted, with fixing details shown in Insert 3-11 and Insert 3-12. It is proposed that seven speakers will be integrated into the totems introduced in paragraph 3.2.9 above.

3.3.7 Table 3-3 outlines the proposed location of each of these proposed speakers.

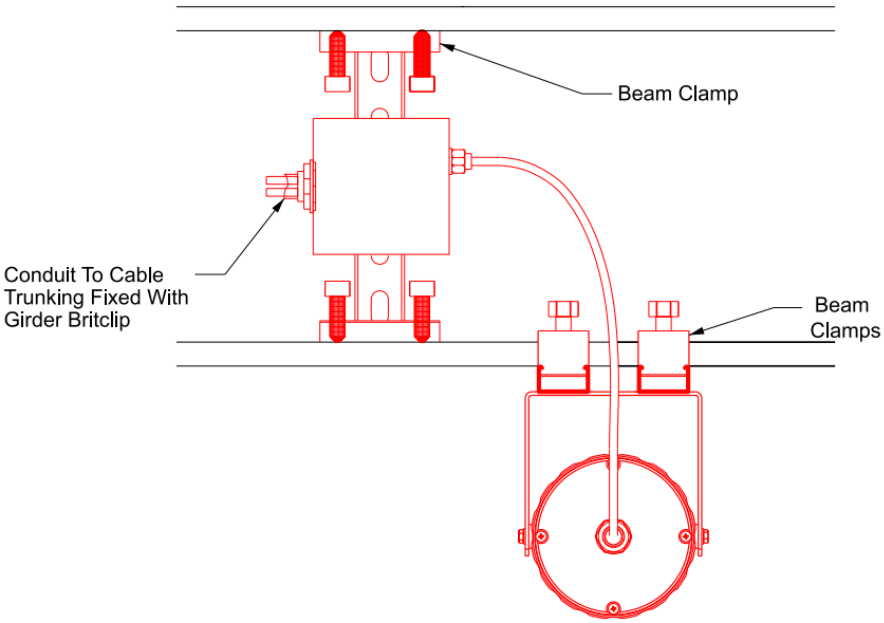

Insert 3-9 - Detail of proposed beam speaker fixing arrangement

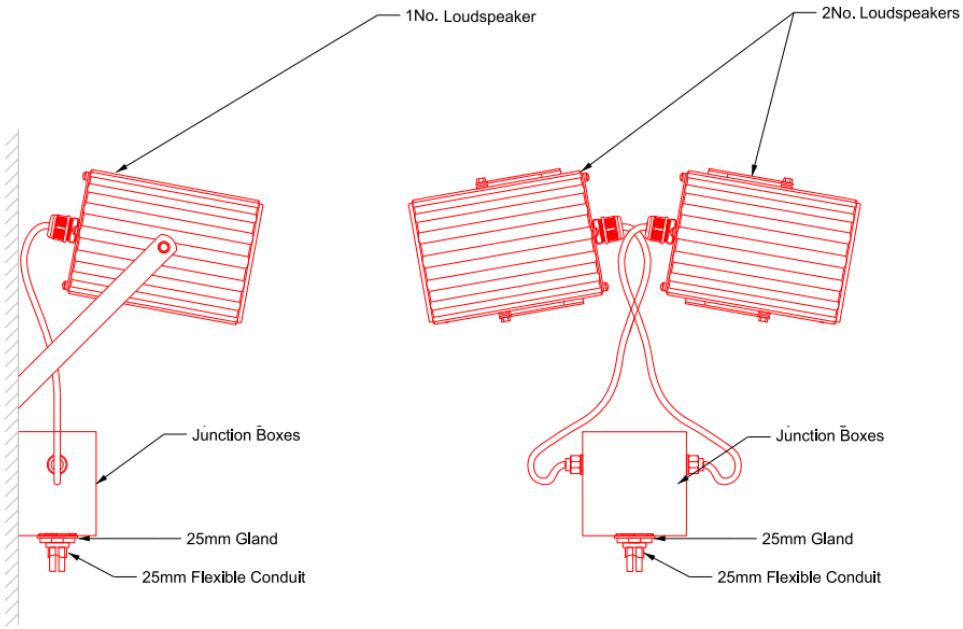

WALL MOUNTED LOUDSPEAKER DETAIL

BACK TO BACK WALL MOUNTED LOUDSPEAKER DETAIL

Insert 3-10 - Detail of proposed wall mounted speakers

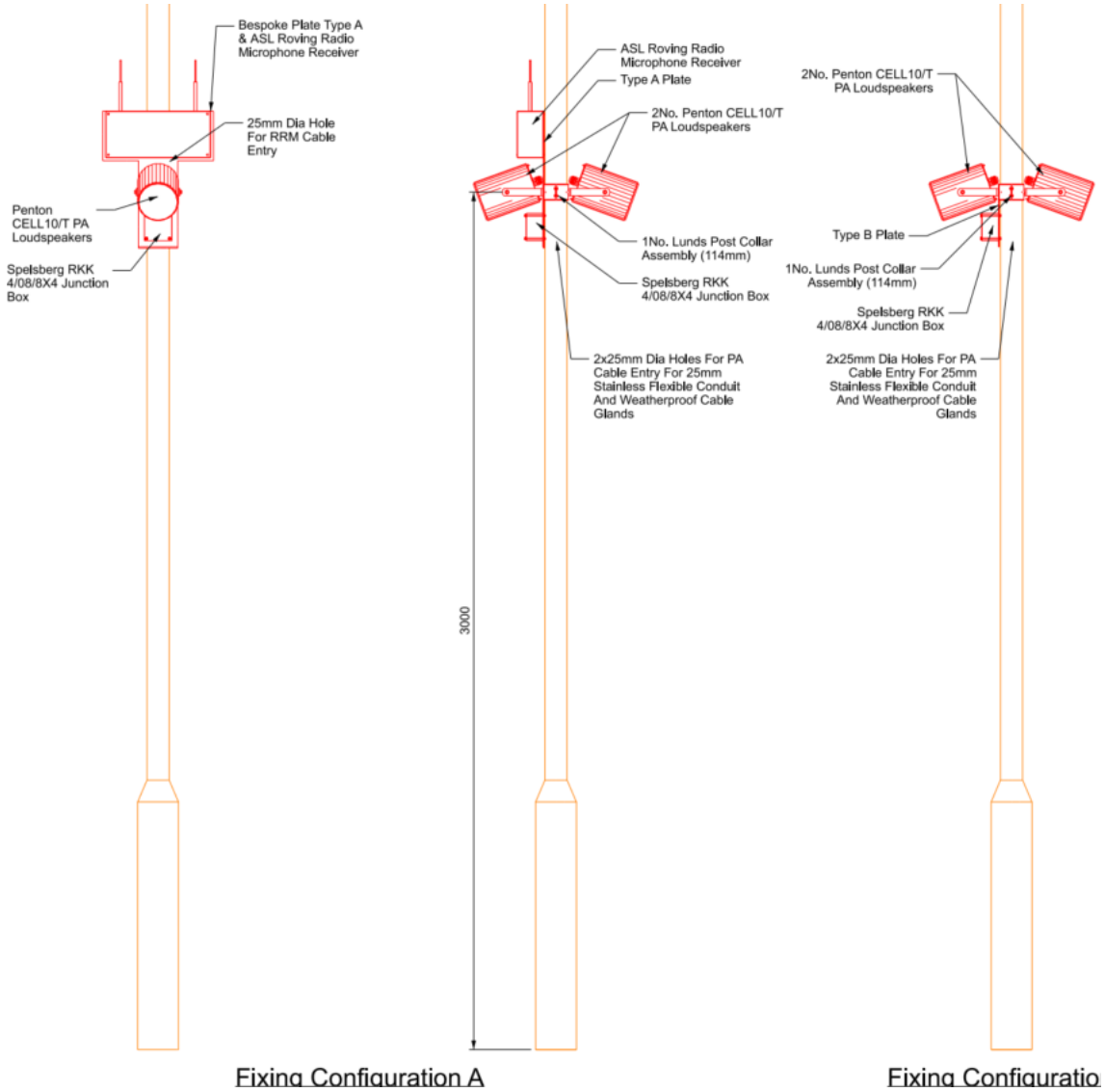

Insert 3-11 - Detail of proposed column mounted speakers

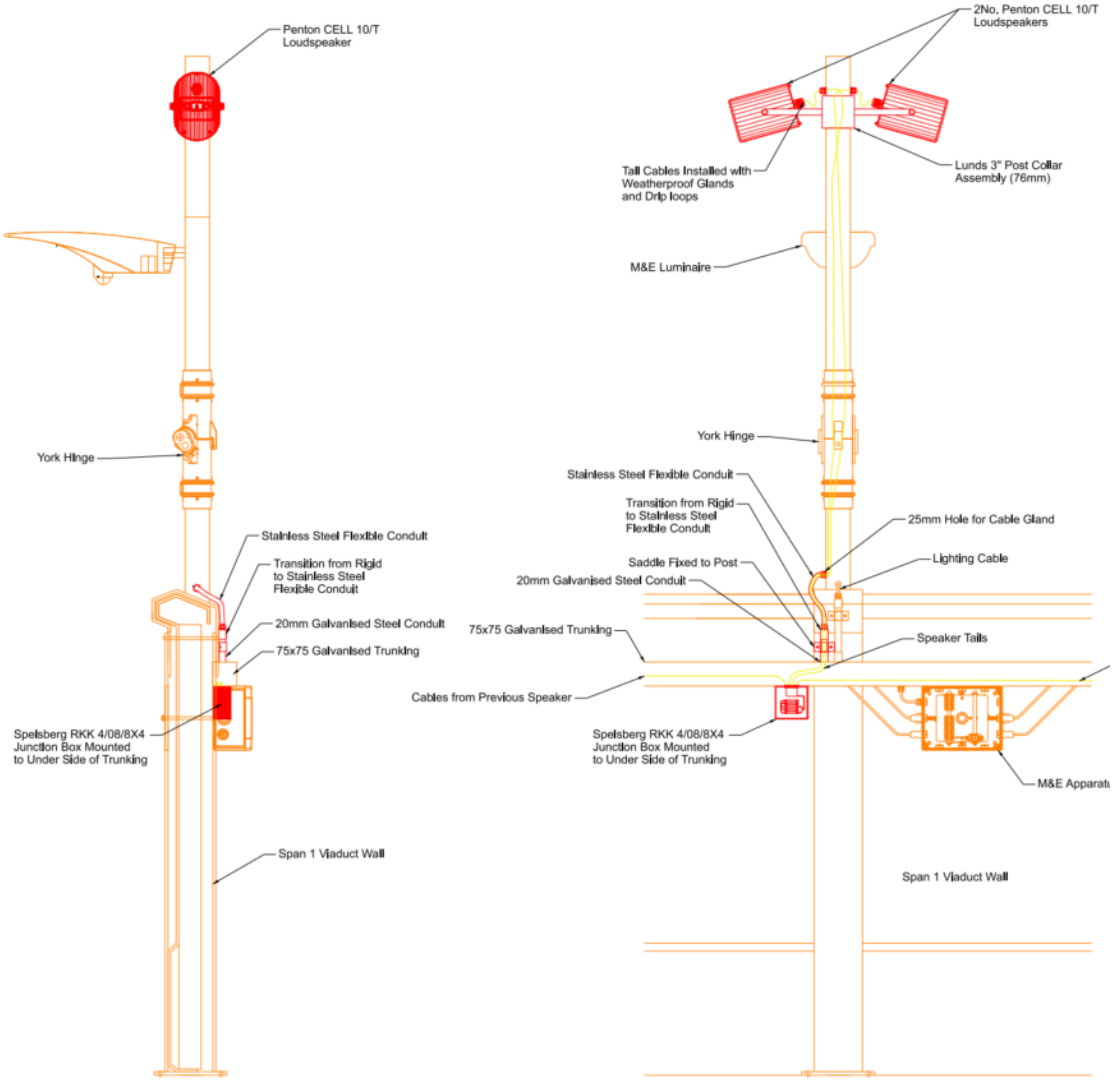

Insert 3-12 - Detail of proposed column mounted speakers on Platform 2 over Span 1 (John William Street Bridge) of Huddersfield Viaduct.

Table 3-3 – Public Address System Summary – See Appendix A.2 for corresponding plan

Speaker	Fixing Type	Location
HUD-SPK-101	Beam Mounted	Platform 1
HUD-SPK-102	Beam Mounted	Platform 1
HUD-SPK-103	Beam Mounted	Platform 1
HUD-SPK-104	Beam Mounted	Platform 1
HUD-SPK-105	Beam Mounted	Platform 1
HUD-SPK-106	Beam Mounted	Platform 1
HUD-SPK-107	Beam Mounted	Platform 1
HUD-SPK-108	Beam Mounted	Platform 1
HUD-SPK-109	Beam Mounted	Platform 1
HUD-SPK-110	Beam Mounted	Platform 1
HUD-SPK-111	Beam Mounted	Platform 1
HUD-SPK-112	Beam Mounted	Platform 1
HUD-SPK-113	Beam Mounted	Platform 1

HUD-SPK-114	Beam Mounted	Platform 1
HUD-SPK-115	Beam Mounted	Platform 1
HUD-SPK-116	Beam Mounted	Platform 1
HUD-SPK-117	Wall Mounted	Platform 1
HUD-SPK-118	Wall Mounted	Platform 1
HUD-SPK-119	Wall Mounted	Platform 1
HUD-SPK-120	Wall Mounted	Platform 1
HUD-SPK-201	Integrated in totem	Platform 2
HUD-SPK-202	Integrated in totem	Platform 2
HUD-SPK-203	Integrated in totem	Platform 2
HUD-SPK-204	Integrated in totem	Platform 2
HUD-SPK-205	Integrated in totem	Platform 2
HUD-SPK-206	Integrated in totem	Platform 2
HUD-SPK-207	Integrated in totem	Platform 2
HUD-SPK-208	Wall mounted	Platform 2 – Station building
HUD-SPK-209	Wall mounted	Platform 2 – Station building
HUD-SPK-210	Wall mounted	Platform 2 – Station building
HUD-SPK-211	Wall mounted	Platform 2 – Station building
HUD-SPK-212	Wall mounted	Platform 2 – Station building
HUD-SPK-213	Wall mounted	Platform 2 – Footbridge stairs
HUD-SPK-214	Wall mounted	Platform 2 – Footbridge stairs
HUD-SPK-215	Wall mounted	Platform 2 – lift tower
HUD-SPK-216	Wall mounted	Platform 2 – lift tower
HUD-SPK-217	Column mounted	Platform 2
HUD-SPK-218	Column mounted	Platform 2
HUD-SPK-219	Customer information screen	Platform 2
HUD-SPK-220	Customer information screen	Platform 2
HUD-SPK-221	Column mounted	Platform 2 – Viaduct Span 1
HUD-SPK-222	Column mounted	Platform 2 – Viaduct Span 1
HUD-SPK-223	Column mounted	Platform 2 – Viaduct Span 1
HUD-SPK-224	Column mounted	Platform 2 – Viaduct Span 1
HUD-SPK-225	Column mounted	Platform 2 – Viaduct Span 1
HUD-SPK-226	Wall Mounted	Platform 2

3.4 Customer Information Screens

Platforms 1 and 2

3.4.1 It is proposed that the platform 1 and 2 customer information screens will be renewed. On platform 2, the proposed arrangement would comprise one new screen supported by a gallows post in addition to screens embedded in seven totems erected along the length of the platform (see Insert 3-13 for depictions of both installations). On platform 1, a bracket mounted screen attached to the Penistone Line canopy is to be installed in the same location as the existing screen (see Insert 3-14) for photo of existing screen to be replaced). The arrangement of the screens is intended to balance operational efficiency, safety and accessibility. The proposals seek to ensure screens are clearly visible to all users while limiting impact to historic fabric.

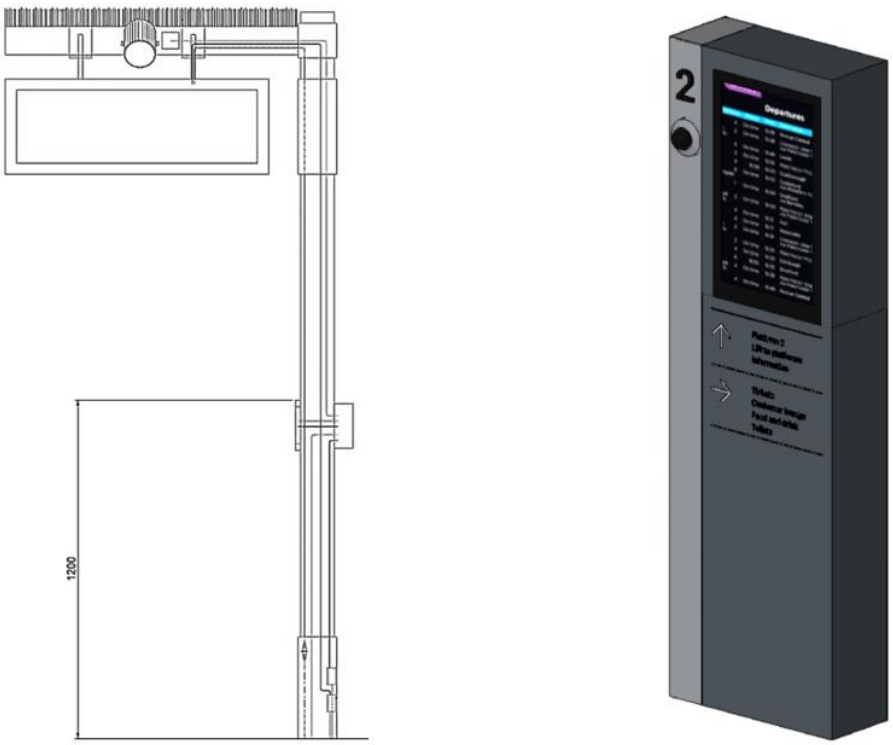

Insert 3-13 - Proposed gallows post and screen (left) and indicative isometric view of totem with integrated customer information screen (right)

Insert 3-14 - Photo showing existing customer information screen on future platform 1, attached to Penistone Line Canopy to be renewed

3.5 Waiting Shelters

Platforms 1 and 2

3.5.1 No waiting shelter is proposed to be sited on platform 1. There is an existing waiting shelter on platform 2 which is proposed to be retained in its current location.

Platforms 3 / 4 and 5 / 6

3.5.2 It is proposed to construct one waiting shelter on platforms 3 / 4 and two shelters on platforms 5 / 6. The proposed waiting shelters are lightweight, contemporary structures designed to provide weather protection while maintaining visual transparency and minimal impact on the

historic environment. The proposed waiting shelters would measure c.7m in length, 2.5m in width and be c.2.6m tall. The shelters would comprise full-height panels of toughened safety glass, providing clear sightlines through the structure and ensuring a contemporary and visually lightweight appearance, complementing the design philosophy of the wider scheme development at the station. These glazed panels are supported by a stainless steel frame, chosen for its durability, corrosion resistance and understated aesthetic.

3.5.3 Each shelter would be capped with a flat aluminium roof, finished in an off-white colour fascia to harmonise with the station's new agreed colour scheme and reduce visual prominence of the shelter. The roof projects slightly beyond the glazing to provide effective rainwater run-off. Externally, the shelter incorporates a stainless steel handrail and bumper rail, offering functional protection. Internally, the layout accommodates benches, perch seating, and designated wheelchair spaces, ensuring compliance with accessibility standards and providing comfort for a range of users.

3.5.4 The overall design approach prioritises a contemporary and visually unobtrusive design in form and finish. The addition of these shelters to platforms 3 / 4 and 5 / 6 would not be considered to result in an adverse impact on the significance of the station.

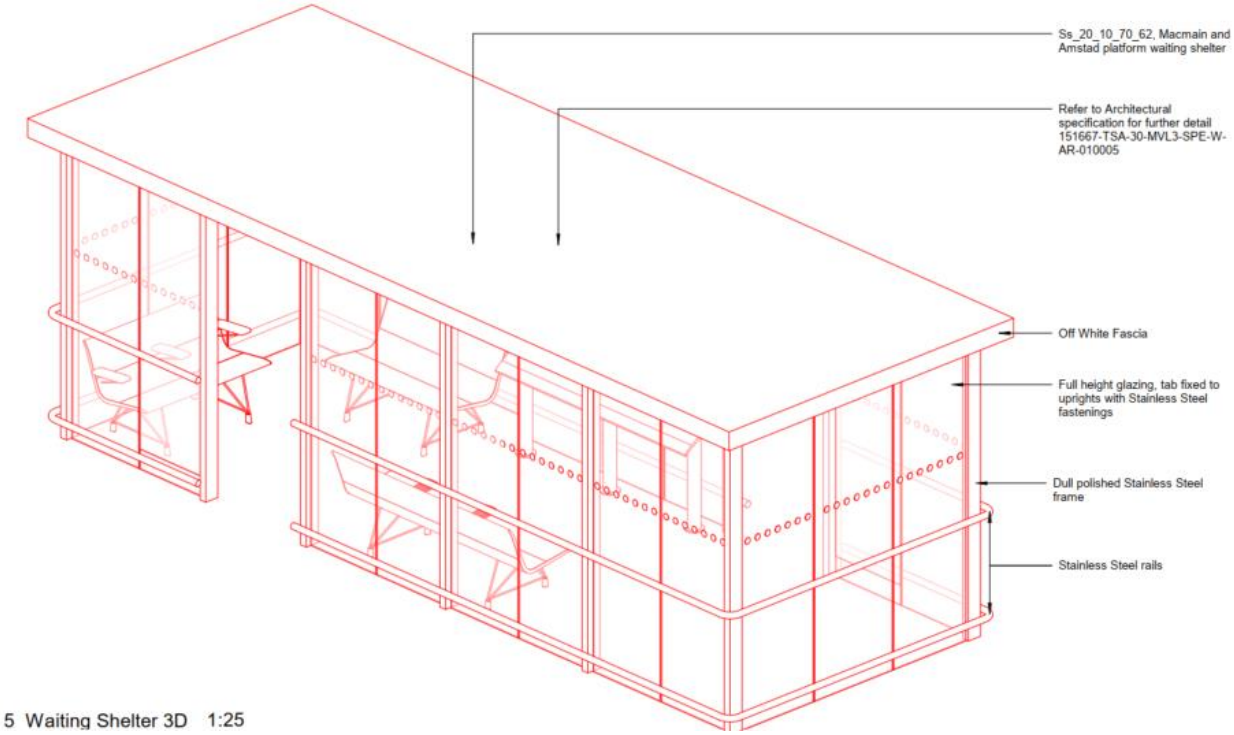

Insert 3-15 - Isometric view of proposed waiting shelter

3.6 Lighting

<u>Platforms 1 and 2</u>

3.6.1 The proposed lighting strategy for the platforms is designed to provide safe, efficient, and visually sympathetic illumination, respecting the heritage character of the station while meeting modern operational standards and efficiencies. The system is based on a modern lighting control system, ensuring energy efficiency, dimming capability, and integration with emergency lighting requirements.

3.6.2 The lighting scheme incorporates a range of luminaire types; each selected for its suitability to the architectural context and functional requirements. A key focus of the scheme has been to ensure enhancement of the architectural significance of the Euston truss roof. The combination of proposed luminaires would draw attention to the impressive scale and

craftsmanship of the ironwork, and newly reinstated roof lantern, while reinforcing the strong architectural rhythm of the space. Together, these elements create a balanced and respectful lighting composition that celebrates the roof's engineering heritage and contributes to the station's character.

3.6.3 The wider requirements for lighting platforms 1 and 2 have been carefully considered to ensure the scheme provides sufficient levels of illumination in all platform areas, the areas around the new footbridge and emergency escapes. A range of contemporary luminaries has been selected, with a modern palette of sympathetic colouring providing a consistent and high-quality finish.

3.6.4 Drawing 151667-TSA-30-MVL3-DRG-E-DS-082525 in Appendix A.2 details the proposed position of each of these luminaires across platforms 1 and 2. The below table summarises the proposed luminaires:

Table 3-4 – Indicative appearance of proposed luminaire types

Luminaire Type	Location	Indicative Image
D1 – Bega Downlight RAL 9007 grey finish.	Surface-mounted Platform 1 Penistone Line Canopy	
D2a – Kirium Pro Mini RAL 9005 black finish.	Post-mounted lantern on 1 m posts to viaduct wall	
D2c – Kirium Pro Midi RAL 9005 black finish.	Post-mounted on 5 m columns positioned towards northern end of platform 2	

D3 – DesignPlan CirCore textured black finish.	Downlight for underside of footbridge lift canopy	
D4 – Bega Compact Downlight RAL 9007 grey finish.	Surface-mounted to Roof A trusses, platform 2	
L1 – Ledlinear Adonis: opal optic.	Linear uplighting to heritage Roof A trusses, platform 2	
L3a – Urbis Schreder brushed stainless finish.	Integrated handrail lighting – Fire escape handrail platform 2	
P1 – Urbis Schreder Flexia Midi RAL 9007 grey finish.	Pendant luminaires suspended from Roof A, platform 1	
W1 – Kova Corner RAL 9005 black finish.	Wall-mounted fittings on open platform walls and footbridge base, platform 2	

W3 – We-ef PLS420 RAL 9004 black finish	Fence-mounted wall lights, platform 2 adjacent to fire escape	

3.7 Weather Screens

Platforms 1 and 2

3.7.1 There are no weather screens proposed to be sited on platforms 1 or 2.

Platforms 3 / 4 and 5 / 6

3.7.2 Weather screens are proposed at station platforms to enhance passenger comfort and safety by providing shelter from wind, rain, and adverse weather conditions. These screens help maintain accessible, dry, and comfortable waiting areas, reduce the risk of slips and falls, and protect station infrastructure and equipment from weather-related damage, thereby supporting a safer and more reliable station environment. Constructed of panes of glass supported by a stainless steel frame, the weather screens would be c2.5m tall and 4m in length. Benches would be positioned in the centre of the screens, with one each side of the glazed panels. It is proposed that one weather screen with accompanying benches would be sited on platforms 3 / 4 and six screens with accompanying benches would be located on platforms 5 / 6.

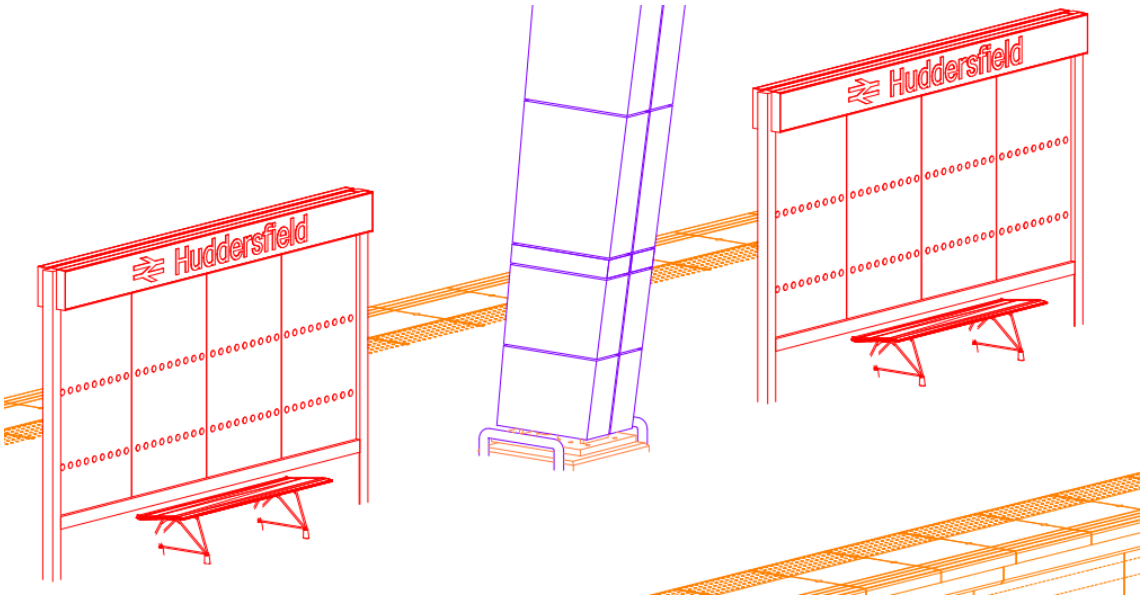

Insert 3-16 - Isometric view of proposed weather screens

Insert 3-17 - Indicative render of proposed weather screen

3.8 Station Signage

3.8.1 The proposed updates to the station signage are detailed in the drawings included in Appendix A.3. The below table provides a high-level overview of the proposed signage as depicted in each of the drawings.

3.8.2 The proposed signage strategy comprises an update of the suite of existing station signage and includes station identifiers, platform numbering, health and safety notices, toilet signage and directional wayfinding. These elements are essential for operational clarity and public safety and their design has been carefully considered to ensure compatibility with the existing character of the station. The signage is modest in scale, utilises materials and finishes typically found on the wider railway network, and would not adversely affect the station's significance or visual coherence. Wayfinding design in stations, including that of signage, is designed to accord with the standards and principles set out in Network Rail's wayfinding standard NR-GN-CIV-300-01, ensuring consistency across stations and a design which meets passenger needs.

3.8.3 The proposed signage comprises examples that can be split into the following groupings:

- Platform Numbers (300mm x 300m),
- Directional Signage (generally 1460mm x 343mm),
- Station Name signs (2550mm x 500mm),
- End of platform safety signage (differing sizes conveying safety information),
- Emergency egress (300mm x 100mm),
- Toilet signage (300mm x 300mm); and
- Totems and digital advertisement (2268mm x 1120mm).

Table 3-5 - Summary of signage shown in drawings included in Appendix A

Drawing Ref	Locations Covered	Elements Covered
151667-TSA-30-MVL3-DRG-A-AR-010210	Platform 1	• Platform number • Directional signage • Station identifier – wall mounted

		• End of platform signs • Emergency egress sign • Penistone Line signage
151667-TSA-30-MVL3-DRG-A-AR-010211	Platform 2	• Platform number • Directional signage • Station identifier – wall mounted • Toilet signs – wall mounted • End of platform signs
151667-TSA-30-MVL3-DRG-A-AR-010212	Totems	• Signage to be included on each of the seven totems
151667-TSA-30-MVL3-DRG-A-AR-010215	Platform 2	• Station identifier – free standing • Station identifier – wall mounted • End of platform signs • Emergency egress
151667-TSA-30-MVL3-DRG-A-AR-010216	Subway	• Wall mounted directional signage • Emergency egress
151667-TSA-30-MVL3-DRG-A-AR-010218	Subway and Footbridge	• Proposed advertisement

3.9 Platform Surfacing

Platforms 1 and 2

3.9.1 The existing platform surfaces comprise asphalt and tactile units. Where new surfacing is proposed, materials would be used which match the existing. The proposals for surfacing covering the areas of platforms 1 and 2 have been outlined in the Phase 3 submission made to discharge Condition 2 (Huddersfield Station Materials) of the granted LBC, which was approved in July 2025 (referenced 2025/44A/91093/W).

3.9.2 A summary of the approved proposals is reproduced below in Table 3-6 - Proposed Platform 1 and 2 Surfacing Materials.

Table 3-6 - Proposed Platform 1 and 2 Surfacing Materials

Platform Surfaces			
Topside covering – across all platforms	Asphalt	Dark grey	Asphalt to be installed to match existing. Designed to be in accordance with requirements of Network Rail Standard Platform Design Drawing NR/CIV/SD/3010.
Platform edge copers, across all platforms	Combined units of concrete coper slabs with tactile paving	Natural concrete edging copers, with contrasting coloured tactile (to match existing)	Coper units preassembled, to combine 4mm tactile sheet bonded to concrete edging slab. Tactile element manufactured to suit requirements of Network Rail Standard NR/L3/CIV/030 'Level 3 – Platform Components and Prefabricated Construction Systems'.

Ends of platforms, where back of platform surface meets riser wall.	Precast concrete edging type EF	Natural concrete edging	Depth 250mm embedded in *insitu* concrete surround to form 100mm high tapping rail. Specification in accordance with BS EN 1340.

3.10 Additional Items

Benches

3.10.1 Where new benches are proposed throughout all platforms in the Station, they would be of simple and contemporary design. Their clean, streamlined profile would ensure visual lightness, allowing the architectural features of the wider station to remain the focal point. The use of refined, durable materials reflects a modern approach to public seating while maintaining a sense of quality appropriate for the listed building. Furthermore, the widespread adoption of similar benches in transport hubs reinforces its suitability, providing a familiar and functional solution that harmonises with the station's historic fabric without introducing visual clutter. The proposed position of the benches is shown on drawings 151667-TSA-30-MVL3-DRG-A-AR-010202, 151667-TSA-30-MVL3-DRG-A-AR-010203, 151667-TSA-30-MVL3-DRG-A-AR-010230 and 151667-TSA-30-MVL3-DRG-A-AR-010231 (see Appendix A.1) and detailed design is shown in 151667-TSA-30-MVL3-DRG-A-AR-010205 (Appendix A.3).

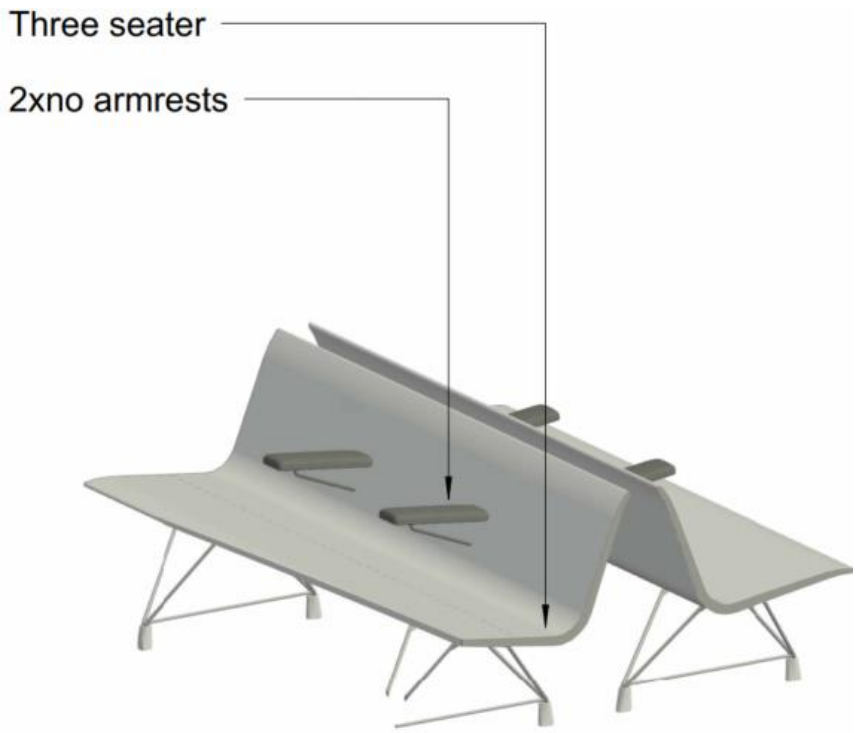

Insert 3-18 - Isometric view of proposed bench design

Insert 3-19 - Indicative photo of equivalent benches used in grade I listed St Pancras Station (NHLE 1342037)

Platform 2 Cycle Shelter

3.10.2 It is proposed that the existing cycle shelter be removed, with elements retained and incorporated into a new cycle store located on platform 2 (see architectural general arrangement drawing 151667-TSA-30-MVL3-DRG-A-AR-010202 in Appendix A.1). The proposed cycle shelter comprises toughened glass panels supported by a galvanized steel frame, powder coated grey in colour. The glazing would include dotted manifestations to allow passive supervision, while reducing the risk of accidents. The shelter would measure 16.5m x 4.65m in area and would extend to a height of 2.9m. The shelter would be accessed via a metal mesh door coloured to match the steel frame. 2no two tier cycle storage systems could be contained within the shelter, along with two timber benches. The shelter would be able to accommodate 60 cycles. The appearance of the cycle shelter would be very similar to that of the existing structure, with no adverse impact to the significance of the listed building arising from the proposals.

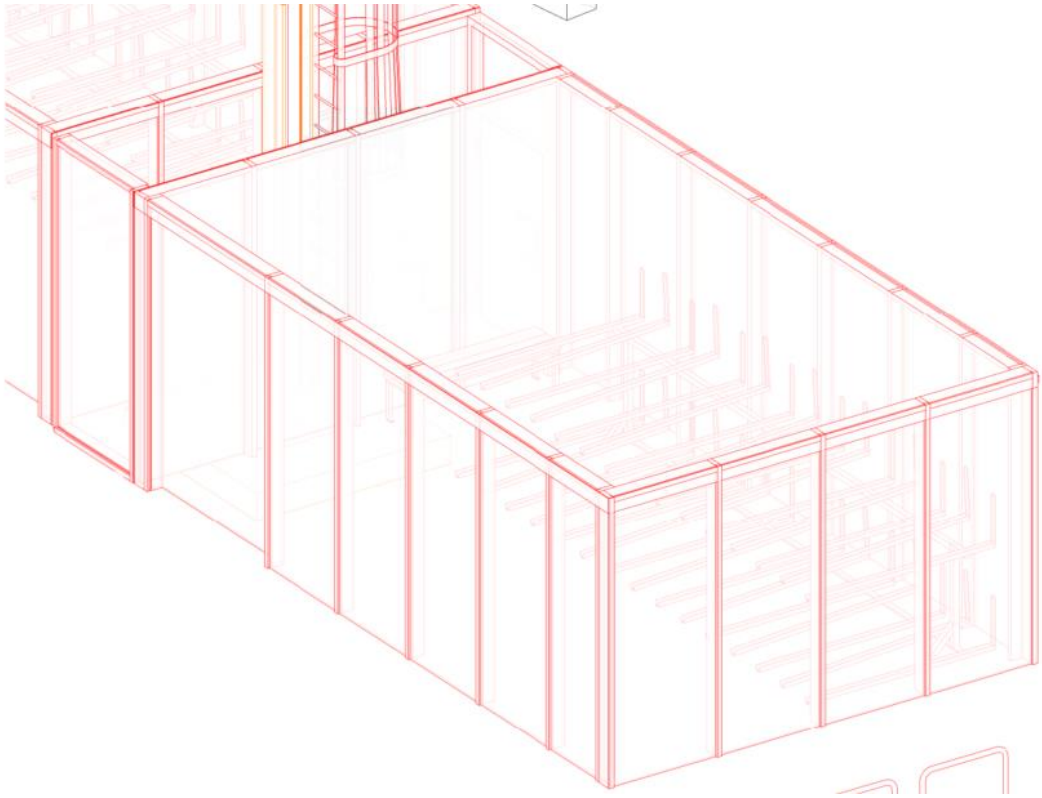

Insert 3-20 - Isometric view of proposed Cycle Shelter

Platform 2 Retail Unit

3.10.3 It is proposed that a retail unit be positioned on platform 1, adjacent to the station building. The unit would occupy a defined footprint within the station (as shown on the general arrangement drawing 151667-TSA-30-MVL3-DRG-A-AR-010202 in Appendix A.1) and would be constructed as a modular structure with a standardised design typical of contemporary station retail facilities. Its detailed specification, including finish and branding, would be finalised at a later stage with input from the appointed operator. The overall appearance will be functional and consistent with other retail units commonly found in transport hubs, ensuring it integrates appropriately within the operational environment of the station.

Audio Frequency Induction Loop

Platforms 1 and 2

3.10.4 To provide the facility for audible announcements on the platforms for persons with hearing aids, audio frequency induction loop (AFIL) units are proposed. These units must be placed as far as reasonably practicable from the overhead line equipment to mitigate against electromagnetic interference caused by the electrified railway. Four of the units (one on platform 1 and three on platform 2) would be on freestanding posts finished in anthracite grey (RAL7016) with off-white band, with a fifth unit affixed to the proposed gallows post supporting the customer information screen on platform 2 (see Appendix A.2 drawing 151667-TSA-W3-MVL3-DRG-R-TL-135010 for location details).

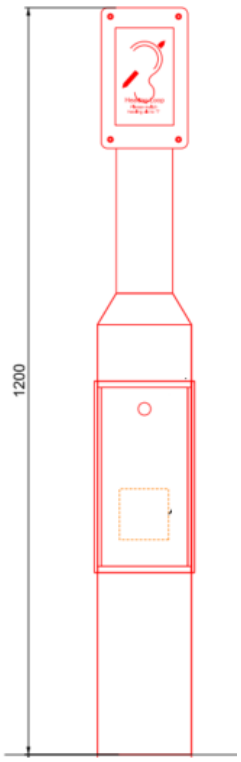

Insert 3-21 - Proposed post mounted AFIL

Help Points

Platforms 1 and 2

3.10.5 It is proposed that three customer help points be installed across platforms 1 and 2 (see Appendix A.2 drawing 151667-TSA-W3-MVL3-DRG-R-TL-135010 for location details). These points provide passengers with immediate access to assistance and information. They are equipped with buttons for contacting station staff, allowing users to report emergencies, request help for accessibility needs, or obtain travel information such as train times and platform details. The help points will be sited on freestanding posts c.1.6m in height, finished in anthracite grey (RAL 7016) with off-white band.

Insert 3-22 - Indicative photo of a customer help point supported by a pedestal post

APPENDIX A.1 – ARCHITECTURAL GENERAL ARRANGEMENTS

Drawing Number	Description
151667-TSA-30-MVL3-DRG-A-AR-010202	Architectural GA (Platform 1/2) 1 of 2
151667-TSA-30-MVL3-DRG-A-AR-010203	Architectural GA (Platform 1/2) 2 of 2
151667-TSA-30-MVL3-DRG-A-AR-010230	Architectural GA (Platforms 3/4)
151667-TSA-30-MVL3-DRG-A-AR-010231	Architectural GA (Platforms 5/6)

APPENDIX A.2 – STATION INFORMATION, SECURITY SYSTEM AND LIGHTING GENERAL ARRANGMENT

Drawing Number	Description
151667-TSA-W3-MVL3-DRG-R-TL-135010	General arrangement platforms 1/2 (CCTV, PA system, AFIL)
151667-TSA-30-MVL3-DRG-E-DS-082525	Platforms 1/2 Lighting Layout

APPENDIX A.3 – ARCHITECTURAL DETAILS

Drawing Ref	Description
151667-TSA-30-MVL3-DRG-A-AR-010210	Wayfinding Platform 1
151667-TSA-30-MVL3-DRG-A-AR-010211	Wayfinding Platform 2
151667-TSA-30-MVL3-DRG-A-AR-010212	Wayfinding Totems
151667-TSA-30-MVL3-DRG-A-AR-010215	Wayfinding Platform 2
151667-TSA-30-MVL3-DRG-A-AR-010216	Wayfinding Subway
151667-TSA-30-MVL3-DRG-A-AR-010218	Advertisement
151667-TSA-30-MVL3-DRG-A-AR-010205	Benches
151667-TSA-30-MVL3-DRG-A-AR-010204	Weather Screens
151667-TSA-30-MVL3-DRG-A-AR-010206	Waiting Shelters

Network Rail
Waterloo General Office
London
SE1 8SW

www.networkrail.co.uk