This document shall not be reproduced in whole or in part or relied upon by third parties for any use whatsoever without the written authority of F. P. McCann Ltd.

DO NOT SCALE, IF IN DOUBT PLEASE ASK.

Section A-A

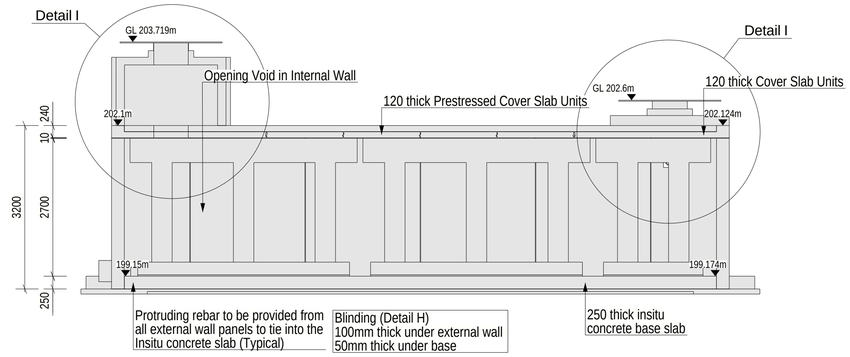

Bearing Design Notes:
The finished sub base to be suitably compacted and of sufficient strength & stiffness to achieve the following:
Assumed minimum modulus of subgrade reaction: 25,000kN/m3
Maximum Bearing Pressure: 160 kN/m2 (ULS) & 90 kN/m2 (SLS)
Max Deflection: 5.9 mm
Depth of excavation / ground improvement is entirely dependent on the existing ground conditions and is the responsibility of the ground works team. It should be noted that FP McCann only provide the precast products and are not responsible for the geotechnical design.

Section B-B

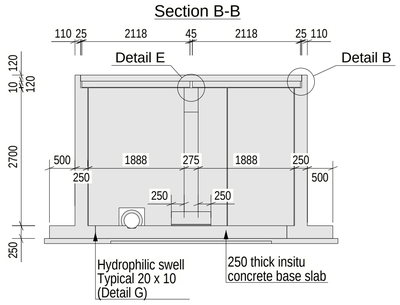

ET-0001 & ET-0002

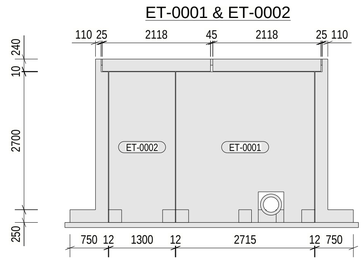

ET-0001

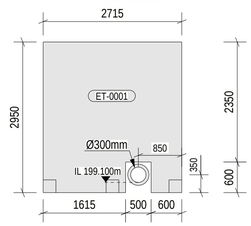

ET-0005

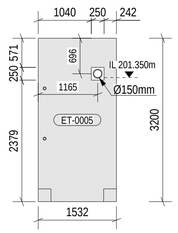

Typical Elevation IT-2701 & IT-2705

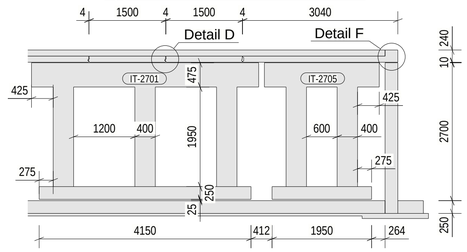

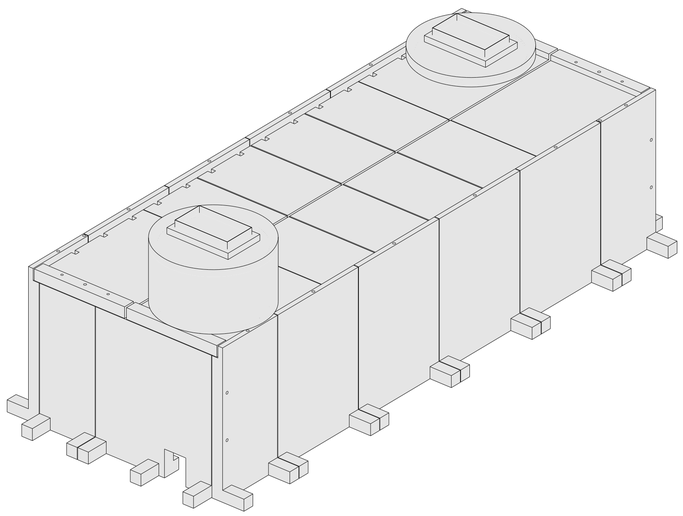

3D View of Attenutation Tanks
(120mm thick Insitu Topping not shown)

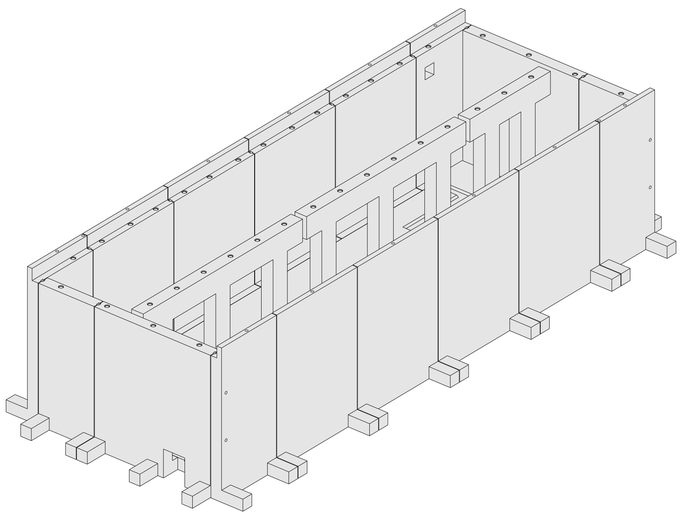

3D View of Attenutation Tanks
(Slabs not shown)

FP McCann Precast Tank Installation Guide:
https://www.youtube.com/watch?v=yuEKwqdGjJw&feature=youtu.be

The Construction (Design & Management) Regulations 2015

a) If you are unsure about your responsibilities please refer to the HSE Website.

b) The notes below and design details (5) should be read by all CDM duty holders alongside the Tank layout, section details and additional notes. Whilst we do not go into specifics such as working at heights, working over excavations, slips & trips etc, where ⚠ is shown in the notes and on the drawing, some potential hazard/ risks are identified and should be assessed accordingly by the main contractor and design team prior to any commencing site works.

c) The FP McCann GA should be read in conjunction with all other relevant drawings from the contract design team e.g. Engineers, M&E sub-contractors.

Installation

The units should be lifted using only the lifting equipment noted in (1), all elements must be lifted in accordance with the installation method (RAMS) provided by FP McCann.

Bearings

It is the responsibility of the ground works engineer to ensure that the bearings provided are structurally adequate in both temporary and final condition, for the support of the precast units. Please also refer to the sections on the General Arrangement drawing. The maximum bearing pressure exerted by the tank structure is: 160kN/m² ULS (90kN/m² SLS)

Voids & Openings

Where pre-formed voids and holes are provided the position of a suitable edge protection or temporary cover should be supplied, installed and maintained by others. The provision and installation of cover and frames and any insitu pipe connections are to be by others.

1. Handling "Hazard" ⚠

a) Volume/ Weight (based on a concrete density of 2.5 T/m³):
See individual unit drawings - (+5% is recommended for sizing lifting equipment)

b) All lifting points shall be used as specified.
Also refer to Lifting & handling Instructions Diagram on Drawing
Anchor Recesses to be filled by others on site

c) Refer to individual unit drawings for anchor quantities and setting out.

2. Concrete (Precast)

a) Lifting strength based on 2 cubes = 25N/mm2
b) Characteristic 28 day cube strength = 50N/mm2
c) Concrete provides Design Chemical Class 4 (DC4) to special Digest 1, Table F2.

3. Reinforcement

a) Reinforcement (500B or C) to BS4449.
b) Scheduling, dimensioning, bending and cutting to BS8666.
c) Cage to be tack welded and/ or tied with 17 gauge annealed tying wire.
d) Prestressed strands to be 9.3mm diameter.
e) Strands to be Class 2 relaxation in accordance with BS 5896.

4. Manufacture

a) Manufactured to BS EN 13369:2013
b) Tolerances to BS EN 13369:2013 & BS EN 13670:2009
c) Precast and insitu finishes

Cast Side	Shutter side steel mould	Shutter side wood mould
U2 Steel Float	F2	F1

**Brushed/ Raked finish on top of cover slabs

d) Marking - Unit shall be indelibly marked to show:
- Contract Number or Name
- Unit reference and date of manufacture
- Unit Weight +5%

5. Design ⚠

a) Concrete design to BS EN 1992-1-1 +A2:2014.
b) Loading - Tank designed to suit most onerous case of:
- 10kN/m² as a Blanket UDL
- 38 tonne, five axle articulated - designation 5A-H, in line with table NA.5 in the UK National Annex to BS EN 1991-2:2003 (Traffic loads on bridges)
- Accidental vehicle in line with cl. 5.6.3 in BS EN 1991-2:2003 (Traffic loads on bridges).
c) Fill over slab: Min 250mm/ Max 2000mm
d) FP McCann have designed the concrete units only, the ground works engineer should ensure that the bearings can sustain the maximum bearing pressure
e) Design Life: > 50 years to BS8500
f) Cover to Reinforcement & Exposure

Face	MPS	Block	Min Cover	Max Cover	Exposure		
Insitu Slab		45 mm	35mm	55 mm	XC 3/4	XD1	XF2
Precast General		30 mm	25mm	35 mm	XC 3/4	XD1	XF2

6. Installation

a) Refer to site specific installation guide.

7. Sealing (supplied & fitted by others)

a) As shown on Sheet 3.

8. Insitu-Concrete

a) Min. required characteristic 28 day cube strength = 37N/mm2.
b) Concrete mix specification to incorporate min. cement content = 360kg/m3 max, w/c ratio = 0.45 and material specification to achieve class DC2.

9. Temporary Works

a) FP McCann are responsible for the temporary works associated with the erection of the precast only. All temporary works design to be by others.
b) The main contractor is responsible for the provision of required temporary works to ensure a stable excavation is maintained for the full period of the tank installation.
c) The design of the tank has assumed that the backfill material has an Angle of Internal Friction = 30° and a unit Weight = 18kN/m². Due consideration is required with regard to the nature of the backfill and type/ size of plant used.
d) Protection of precast units during temporary works (backfilling) is the responsibility of others.
e) Any plant used for backfilling or subsequent works, around or over tank, should be suitably sized to ensure that the net applied loads are no greater than the permanent design loads.
f) Any temporary works should be designed/ installed/ removed to ensure that the net applied loads are no greater than the permanent design loads.

Rev	Date	Revision Detail	By	Chk	App
P02	24-07-25	Unit size and weight re-configured	PM		
P01	16-07-25	Initial Drawing	PM		

Status: For Approval
Suitability: S4

FP McCann
3 Drumard Road,
Knocklougrim,
Magherafelt,
BT45 8QA
Tel: +44 (0)28 7964 2558
www.fpmccann.co.uk

Client.
Orion Homes

Project.

Title.
General Arrangement 2 of 3
StormTank MPS
11.6 x 4.051 x 2.7 m

Drawn:	Checked:	Approved:
PM		
Internal Ref: 05-BYL-xxxx	Date: 16-07-25	Scale: NTS

Drawing No : HOL-FPM-ZZ-XX-DR-X-0002
Rev: P02

A1 1cm