EASTERN

Catering Engineering LTD

Bespoke Commercial Catering Equipment Engineers.
Specialist in the Manufacture and Installation of Ventilation Systems.

EXTRACTION SYSTEM PROPOSAL

Designed by

Amina Parveen Fiza

10/25/2025

Catering Engineering LTD

Bespoke Commercial Catering Equipment Engineers.
Specialist in the Manufacture and Installation of Ventilation Systems.

Extraction System Proposal

RE: Eden Banqueting, 297, Bradford Road, Batley, WF17 6HY

Further to my visit at your premises regarding the installation of a fume extraction system at your premises, we will be installing an extraction system that will achieve the desired performance, and to keep it within the desired council regulations, to abate excessive noise, reduced gaseous odours and small grease or food particles.

DEFFRA ANALYSIS

CRITERIA	SCORE	DESCRIPTION
DISPERSION	5 -GOOD	DISCHARGING 1M ABOVE EAVES AT 15M/S
PROXMITY OF RECEPTORS	5 – MEDIUM	CLOSEST SENSITIVE RECEPTOR BEING BETWEEN 20 AND 100M
SIZE OF KITCHEN	1 - SMALL	LESS THAN 30 COVERS
COOKING TYPE ODOUR AND GREASE LOADING	10 - HIGH	FRIED FOOD, HIGH GREASE LOADING CUISINE
SCORE	21: MEDIUM	MEDIUM LEVEL ODOUR CONTROL

The proposed kitchen is for a Take-Away, serving FRIED FOOD with HIGH levels off grease loading cooking type, with the closest sensitive receptor being between 20 to 100m to the closest sensitive receptor. We have therefore determined that the level of odour, outlined in the DEFFRA Guidelines, the premises is

Designed by Amina Parveen Eastern Engineering Catering Engineering LTD
203 Garnett street, Bradford, West Yorkshire, BD3 9HA
01274 393 494 – easternvetilation@hotmail.co.uk

categorised as MEDIUM risk, and therefore an extraction system has been designed to eliminate these levels of odour created.

The internal aspect of the extraction system was designed to be compact, accessible with low acoustic and visual pollution. Our selection is based on a canopy, 4.5m x 1.2m, canopy face velocity of 0.3m/s achieving a total air volume of 1.94m3/s, via 500mm dia duct work throughout (layout as per sketch provided).

The extraction hood in the kitchen will house stainless steel baffle filters as the first level of filtration, the air flow will then flow through further filtration.

It will be also comprised of filter pods for secondary filtration, coupled directly to the fan and attenuator and terminating via a high velocity jet cowl. The entire system is designed to be sleek and easily accessible and will exit the building via the side of the building and alongside the building. It will terminate approximately 1m above the eaves via high velocity cowl. The entire system will be mounted with anti-vibration mounts, this is mitigate and minimise any excessive vibration, and to avoid any disturbance.

The system is designed to be able to maintain and service the various elements off the system. We will also be installing a fresh air intake fan to allow fresh air to circulate inside the premises.

SOUND LEVELS

The fan selection is based on the cuisine, which will produce smoke and grease, and be able to extract the air accordingly. The proposed fan will produce a sound level off 48dBa and to satisfy the council's requirement off 35dBa we propose a sound attenuator before the acoustic control extractor fan and after to bring this down to 28 dBa. The system will be mounted with anti-vibration mounts to ensure minimum vibration caused by the fan and to not disrupt the neighbouring buildings. All relevant data of

Designed by Amina Parveen Eastern Engineering Catering Engineering LTD
203 Garnett street, Bradford, West Yorkshire, BD3 9HA
01274 393 494 – easternvetilation@hotmail.co.uk

sound and noise can be found along with the specifications can be found below.

Amina Parveen Fiza LLB

Managing Director

CONTENTS

Fitting	*Specification*	*Description*	*Page*
Fan	Max Compac 560mm Fan	High Temperature, High Speed Fan,	3
Primary Filter	Jasun Baffle Filter	500 X 500 X 50mm Stainless steel grease filters	6
Pre-Filter	Farr Camfil 30/30 (G4)	494 X 494 X 50mm pleated pre filter of fine grease particles, second stage	8
Carbon Impregnated Filter	Jasun Carbon Panels (ACKI)	594x594x95mm activated carbon filter, reduced cooking odours enhanced garlic odour removal	9
Attenuator	Helios Flanged Circular Attenuator	500x900mm with acoustic reduction medium	11
Termination	Jet Cowl with Mesh Guard	Vertical exhaust gas termination, cut to prevent rain ingress, meshed to abate small birds	12
Anti-Vibration Mount	Nauare AV's for upto 480kg	Anti-vibration mounts to ensure system doesn't disturb neighbours, installed to prevent any structure bourne noise	14
Fresh Air Fan	Vent-Axia 355mm	Plate Mounted Axial Fan	15
Sketch		A visual guide of where the duct flue will come out from	16
Maintenance Schedule	All Components	A thorough schedule for all components of the extraction system	22

Designed by Amina Parveen Eastern Engineering Catering Engineering LTD
203 Garnett street, Bradford, West Yorkshire, BD3 9HA
01274 393 494 – easternvetilation@hotmail.co.uk

MAXFAN COMPAC

230 V/50HZ/1 PH - L TYPE

PERFORMANCE CHART - 56 MaXfan Compac (EJ563236)

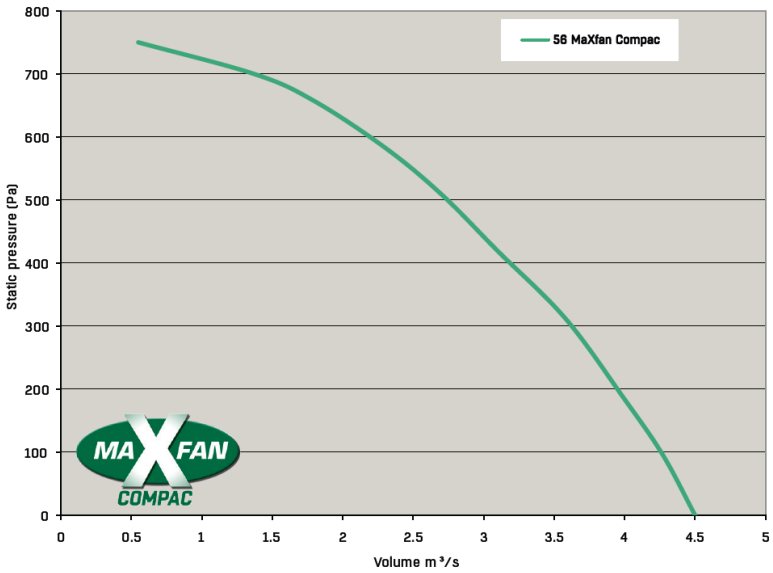

ADDITIONAL ACCESSORIES

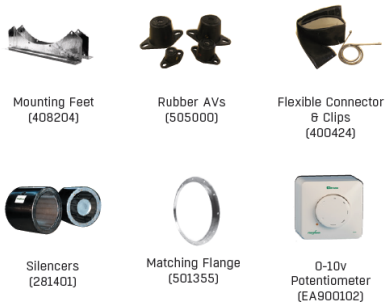

Mounting Feet (408204)

Rubber AVs (505000)

Flexible Connector & Clips (400424)

Silencers (281401)

Matching Flange (501355)

0-10v Potentiometer (EA900102)

PRODUCT AND ELECTRICAL TABLE - 56 MaXfan Compac

Part Number	Fan Description	Temperature (°C)	Frame	kW	FLC (A)	SC (A)	Phase	Voltage	Inverter Model	Wiring Diagram	Breakout Sound Level dB(A) @ 3m	Fan Weight (kg)	Casing Length (mm)
EJ563236	56 MaXfan Compac	70	90	2.64	9.4	52.8	1	230	9.6	CD3042	48	55	520

SOUND DATA - 56 MaXfan Compac

	Sound Spectrum (Hz)								Overall	
	63	125	250	500	1k	2k	4k	8k	Lw*	LpA @ 3m**
Inlet*	86	93	88	90	88	85	79	77	97	72
Outlet*	87	95	89	90	88	85	80	79	98	72
Breakout*	77	74	63	65	63	58	61	55	79	48

*Lw dB re 10^{-12} W
**dBA re $2x10^{-5}$ Pa
Ps Sound data at 3.22m3/s @ 400Pa (static)

DRAWING - 56 MaXfan Compac

Size	Motor Frame	C	K	Weight kg Fan
560	90L	520	434	55

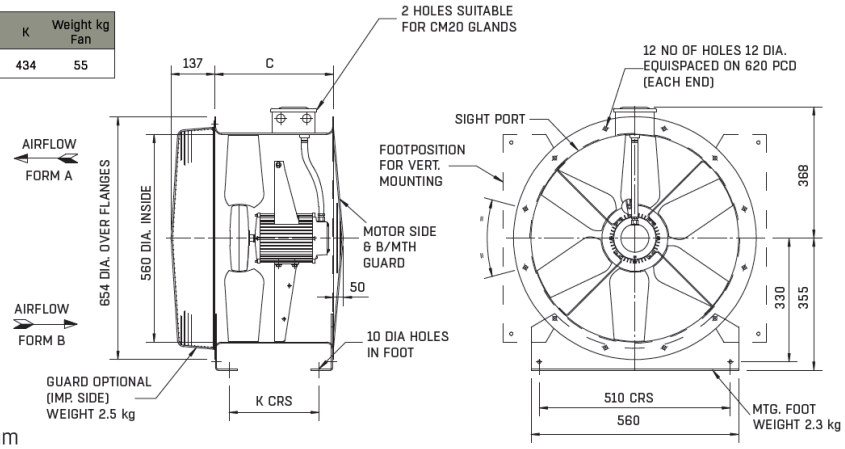

All dimension in mm

Designed by Amina Parveen Eastern Engineering Catering Engineering LTD
203 Garnett street, Bradford, West Yorkshire, BD3 9HA
01274 393 494 – easternvetilation@hotmail.co.uk

INVERTER SINGLE TO THREE PHASE

FEATURES & BENEFITS

- 1 Ph 200-240VAC to 3 Ph 200-240 VAC Electrical Supply
- Pre-Programmed for easy installation
- Max shielded cable length 25m
- Asynch motor speed control
- Ultra compact & light making it easy to install
- Simple to use Alpha-numeric display
- Included fitted potentiometer for manual speed adjustment
- Connectable as Modbus RTU offering control flexibility
- Built in RFI filter minimising interference
- Built-in brake functions with built in DC and AC brake functions
- 2xAI, 1xAO & 1xRO / RS485 connection options
- BMS enable/disable
- Maximum operating ambient 50°C
- Coated PCB standard for harsh environments
- High energy efficiency

DESCRIPTION

Our inverter is a frequency converter with unsurpassed reliability, user-friendliness, condensed functionality, and extremely easy to commission. Terminal numbers are named in the same manner as in the rest of the family, making installation easy.

It converts a single phase 200-240 VAC input into a three phase output to allow the MaXfan Compac product to use a high efficiency 3Ph, 230V motor.

A safety isolator/switch disconnector should be installed on the mains side of the drive to ensure that the mains supply can be isolated for maintenance.

Please see the image below, illustrating the connections on the bottom of the inverter drive.

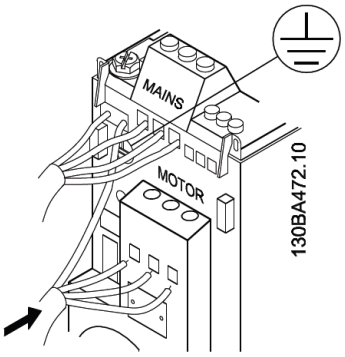



RANGE

There are two matched inverters that are specifically designed to use with our MaXfan Compac fan range. Details are shown below.

Inverter Model	Ph.	V	Amps	kW	Enc.
6.8	1-3	200-240V	6.8	1.5	M2
9.6	1-3	200-240V	9.6	2.2	M3

ACCESSORIES

Description	Part
Local Control Panel(LCP12) Digital Keypad with Pot.	EA901058

Step 1
Fit top cover on frequency converter.

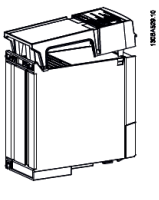

Illustration 4.14

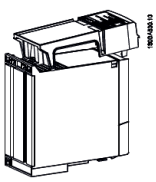

Illustration 4.15

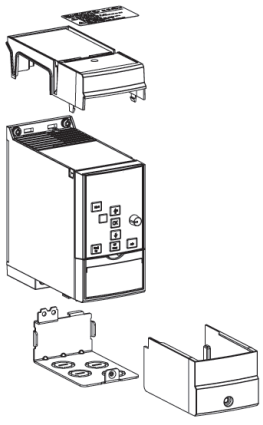

Illustration 4.16

Designed by Amina Parveen Eastern Engineering Catering Engineering LTD
203 Garnett street, Bradford, West Yorkshire, BD3 9HA
01274 393 494 – easternvetilation@hotmail.co.uk

Primary Filter: Jasun Baffle Filter Model GFBE-2020

Manufacturing Air Filters in the UK for Over 40 Years

Baffle Filter Model GFBE

JASUN ENVIROCARE PLC



GENERAL DESCRIPTION

These filters are designed for use in commercial kitchens and ventilation from food preparation areas where their primary function is to reduce flame from travelling from the cooking area up into the extract duct.

Construction

These filters are manufactured by rolling stainless steel to create a series of baffle plates which are welded onto a sub frame. The sub frame is then wrapped with the outer frame.

Features

- Strong Double frame construction
- Scratch Free outer surface
- Bright Polished Surface
- Fold down handles
- Drain Holes
- Rolled Safety Edges
- Low Price
- Ex-Stock Delivery



Frame Material

- Stainless Steel to Specification BS1449(2)
- Bright Polished Surface

Copyright © Jasun Envirocare Plc 2007-2012
Issue Date 17 September 2012 9:36 AM

FM 29257 BS EN ISO 9001:2008

EMS 81914 BS EN ISO 14001:2004

Designed by Amina Parveen Eastern Engineering Catering Engineering LTD
203 Garnett street, Bradford, West Yorkshire, BD3 9HA
01274 393 494 – easternvetilation@hotmail.co.uk

GFBE Baffle Filter STANDARD SIZES



Jasun Envirocare always specify filters as Height (H) x Width (W) This is particularly important with baffle filters because the handles will always go on the H edge, the blades will always run along the H edge, and the drain holes will always be in the W edge

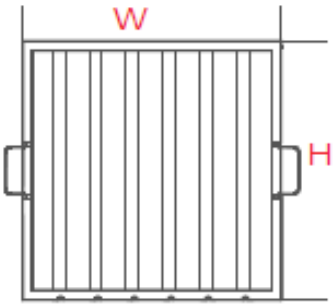

Part No.	Nominal Size Inches	Height (mm)	Width (mm)	Depth (mm)	Minimum Airflow m³/hr	Recommended Airflow m³/hr	Maximum Airflow m³/hr
GFBE-1020	10 x 20 x 2	241	495	45	490	558	644
GFBE-1212	12 x 12 x 2	292	292	45	350	399	460
GFBE-1216	12 x 16 x 2	292	394	45	472	538	621
GFBE-1224	12 x 24 x 2	292	594	45	712	812	937
GFBE-1616	16 x 16 x 2	394	394	45	637	727	838
GFBE-1620	16 x 20 x 2	394	495	45	800	913	1053
GFBE-1625	16 x 25 x 2	394	622	45	1006	1147	1323
GFBE-1818	18 x 18 x 2	445	445	45	813	927	1069
GFBE-2010	20 x 10 x 2	495	241	45	490	558	644
GFBE-2016	20 x 16 x 2	495	394	45	800	913	1053
GFBE-2020	20 x 20 x 2	495	495	45	1006	1147	1323
GFBE-2025	20 x 25 x 2	495	622	45	1264	1441	1663
GFBE-2424	24 x 24 x 2	597	597	45	1463	1668	1925

Copyright © Jasun Envirocare Plc 2007-2012





Pressure Drop	
Minimum	57Pa
Recommended	76Pa
Maximum	100Pa
Final Recommended Pressure Drop	

JASUN ENVIROCARE PLC

T +44 (0) 1278 452277
F +44 (0) 1278 450873

Riverside House, Parrett Way
Bridgwater TA6 5LB

www.jfilters.com

Designed by Amina Parveen Eastern Engineering Catering Engineering LTD
203 Garnett street, Bradford, West Yorkshire, BD3 9HA
01274 393 494 – easternvetilation@hotmail.co.uk

Pre-filter: Farr G4 610 X 610 X 50mm

Pre-Filtration: G3 to G4

Pleated Filters

30/30



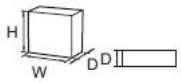

Advantages

- Water resistant cardboard frame
- Conception with girders/ crossbars
- Diagonal stiffner stuck to media to keep the spacing of folds, protect and maintain the filter
- Fully supported media bonded onto a wire support grid
- Rounded pleats for a maximum capacity of dust retention and facilitate airflow through the media
- Replaceable filter media

Application: Primary filter for air conditioning systems.
Type: High performance disposable pleated panel filter.
Case: Rigid water resistant cardboard.
Media: Mixture of cotton and synthetic fibre.
EN779:2012 efficiency: G4.
Gravimetric efficiency: 92%.
Recommended final pressure drop: 250 Pa.
Temperature: 70°C maximum in continuous service.
Holding frames: Front and side access housings and frames are available, Type 8, Type L, and FC Housings.

Dimensions (WxHxD) mm	Filter classification EN779:2012	Air flow/pressure drop m³/hr/Pa	Media area m2	Unit weight kg	Unit volume m3
305x305x50	G4	864/70	0,39	0,24	0,01
305x610x50	G4	1710/70	0,79	0,4	0,01
406x508x50	G4	1890/70	0,94	0,44	0,01
406x635x50	G4	2340/70	1,18	0,55	0,02
508x508x50	G4	2340/70	1,12	0,55	0,02
508x610x50	G4	2880/70	1,36	0,66	0,02
[illegible]	[illegible]	[illegible]	[illegible]	[illegible]	[illegible]
610x610x50	G4	3420/70	1,64	0,78	0,02
305x610x100	G4	2070/90	1,28	0,75	0,02
406x508x100	G4	2250/90	1,45	0,85	0,02
406x635x100	G4	2880/90	1,82	1,05	0,04
508x508x100	G4	2880/90	1,73	1,05	0,04
508x610x100	G4	3420/90	2,09	1,25	0,04
508x635x100	G4	3600/90	2,18	1,3	0,04
610x610x100	G4	4140/90	2,56	1,45	0,04
305x610x25	G4	1310/65	0,42	0,25	0,01
406x508x25	G4	1460/65	0,45	0,3	0,01
406x635x25	G4	1840/65	0,57	0,35	0,01
508x508x25	G4	1800/65	0,56	0,35	0,01
508x610x25	G4	2200/65	0,68	0,4	0,01
508x635x25	G4	2300/65	0,71	0,45	0,01
610x610x25	G4	2600/65	0,83	0,5	0,01

Other dimensions are available on request - All dimensions are nominal.

ment, Camfil reserve the right to change specifications without notice. 2013-01-28

Designed by Amina Parveen Eastern Engineering Catering Engineering LTD
203 Garnett street, Bradford, West Yorkshire, BD3 9HA
01274 393 494 – easternvetilation@hotmail.co.uk

Carbon Filter: Jasun Carbon 4-2424 (ACKI)

Manufacturing Air Filters in the UK for Over 40 Years

Activated Carbon Panels

JASUN ENVIROCARE PLC



General Description

These filters are manufactured for ease of installation and incorporation into ducted air systems. They can be used on both supply for purifying incoming air, and can be used on the extract to remove toxic gasses and odours generated within a process.



Construction

The panels are manufactured using long established bonding techniques which hold the activated carbon granules in a rigid biscuit. The biscuit is encapsulated in a carbon impregnated cloth which prevents any leakage of granules or powder.

The unique bonding method used by Jasun Filtration ensures that, unlike our competitors filters, that the panels will remain intact and rigid even if wet.

For filters over 45mm we create a panel using 2 thin biscuits on the outside and loose filling the void between with activated granules. This allows us to use special grades and combinations of formulated carbon, for instance school grade carbon which is a blended mixture of carbons designed for fume cabinets.
Depth: 12mm to 150mm

Typical Applications

- Reduction of Cooking Odours
- Removal of Kerosene Exhaust Fumes
- General Odour Reduction
- Neutralisation of Ammonia and its Derivatives
- Removal of Formaldehyde
- Removal of Airborne Pollutants and Contaminants

Please check with our sales department when specifying carbon filters as most applications require a bespoke solution specifically tailored for the job in hand.

Stock Grades of Carbon

Grade	Application
AC207	Good general Carbon grade suitable for many applications
AC209	Copper Coated Carbon for use in Mueums and archives
ACKI	For enhanced garlic odour removal
ACSC1	School Grade for acid Gasses and SO_2 HCL NO_2 H_2S
ACAM	Ammonia
ACMO	Mortury Grade, formaldehyde Removal
ACCA	Caustic, Pottasium Hydroxide Impregnated
ACGU	Special formulation for Sewage odours

FM 29257 EMS 81914

Copyright © Jasun Envirocare Plc 2007-2012
Issue Date 17 September 2012 9:36 AM
203 Garnett street, Bradford, West Yorkshire, BD3 9HA
01274 393 494 – easternvetilation@hotmail.co.uk

Activated Carbon Panels STANDARD SIZES



Model Number	Description	Size			Weight Of Carbon Kg	Capacity m³/hr	
		Height (mm)	Width (mm)	Depth (mm)		0.1 Second Dwell	0.2 Second Dwell
{grade}-1-1212	Carbon Panel 12x12x1	292	292	20	0.77	55	28
{grade}-1-1224	Carbon Panel 12x24x1	292	594	20	1.56	112	56
{grade}-1-1515	Carbon Panel 15x15x1	368	368	20	1.22	88	44
{grade}-1-1620	Carbon Panel 16x20x1	394	495	20	1.76	126	63
{grade}-1-1625	Carbon Panel 16x25x1	394	622	20	2.21	159	79
{grade}-1-1818	Carbon Panel 18x18x1	445	445	20	1.78	128	64
{grade}-1-1824	Carbon Panel 18x24x1	445	594	20	2.38	171	86
{grade}-1-2020	Carbon Panel 20x20x1	495	495	20	2.21	159	79
{grade}-1-2024	Carbon Panel 20x24x1	495	594	20	2.65	191	95
{grade}-1-2025	Carbon Panel 20x25x1	495	622	20	2.77	200	100
{grade}-1-2424	Carbon Panel 24x24x1	594	594	20	3.18	229	114
{grade}-2-1212	Carbon Panel 12x12x2	292	292	45	1.73	124	62
{grade}-2-1224	Carbon Panel 12x24x2	292	594	45	3.51	253	126
{grade}-2-1515	Carbon Panel 15x15x2	368	368	45	2.74	197	99
{grade}-2-1620	Carbon Panel 16x20x2	394	495	45	3.95	284	142
{grade}-2-1625	Carbon Panel 16x25x2	394	622	45	4.96	357	179
{grade}-2-1818	Carbon Panel 18x18x2	445	445	45	4.01	289	144
{grade}-2-2020	Carbon Panel 20x20x2	495	495	45	4.96	357	179
{grade}-2-2024	Carbon Panel 20x24x2	495	594	45	5.95	429	214
{grade}-2-2025	Carbon Panel 20x25x2	495	622	45	6.23	449	224
{grade}-2-2424	Carbon Panel 24x24x2	594	594	45	7.14	514	257
{grade}-4-1212	Carbon Panel 12x12x2	292	292	95	3.65	262	131
{grade}-4-1224	Carbon Panel 12x24x2	292	594	95	7.41	534	267
{grade}-4-1515	Carbon Panel 15x15x2	368	368	95	5.79	417	208
{grade}-4-1620	Carbon Panel 16x20x2	394	495	95	8.34	600	300
{grade}-4-1625	Carbon Panel 16x25x2	394	622	95	10.48	754	377
{grade}-4-1818	Carbon Panel 18x18x2	445	445	95	8.47	610	305
{grade}-4-2020	Carbon Panel 20x20x2	495	495	95	10.47	754	377
{grade}-4-2024	Carbon Panel 20x24x2	495	594	95	12.57	905	453
{grade}-4-2025	Carbon Panel 20x25x2	495	622	95	13.16	948	474
{grade}-4-2424	Carbon Panel 24x24x2	594	594	95	15.08	1086	543
{grade}-6-1212	Carbon Panel 12x12x2	292	292	150	5.76	414	207
{grade}-6-1224	Carbon Panel 12x24x2	292	594	150	11.71	843	421
{grade}-6-1515	Carbon Panel 15x15x2	368	368	150	9.14	658	329
{grade}-6-1620	Carbon Panel 16x20x2	394	495	150	13.16	948	474
{grade}-6-1625	Carbon Panel 16x25x2	394	622	150	16.54	1191	596
{grade}-6-1818	Carbon Panel 18x18x2	445	445	150	13.37	962	481
{grade}-6-2020	Carbon Panel 20x20x2	495	495	150	16.54	1191	595
{grade}-6-2024	Carbon Panel 20x24x2	495	594	150	19.85	1429	714
{grade}-6-2025	Carbon Panel 20x25x2	495	622	150	20.78	1496	748
{grade}-6-2424	Carbon Panel 24x24x2	594	594	150	23.82	1715	857

Copyright © Jasun Envirocare Plc 2007-2012

JASUN ENVIROCARE PLC
T +44 (0) 1278 452277
F +44 (0) 1278 450873
Riverside House, Parrett Way
Bridgwater TA6 5LB
www.jfilters.com

Designed by Amina Parveen Eastern Engineering Catering Engineering LTD
203 Garnett street, Bradford, West Yorkshire, BD3 9HA
01274 393 494 – easternvetilation@hotmail.co.uk

Helios Flanged Attenuator RSD 500/1200 (8757)

Flanged circular attenuators RSD

Specification – Installation
Casing made from galvanised steel, acoustically lined with high quality mineral wool covered with cloth to prevent erosion. Acoustic lining retained by perforated steel sheet. Dimensions and tapped flange holes of all sizes fit fan's nominal diameter (R 20). Tapped holes in accordance to DIN 24155, Pt. 3.

Pressure drop
The resistance of the RSD attenuators is very low. When designing the system consider twice the pressure drop of rigid ducting.

Attenuation factor
To increase the attenuation, several attenuators can be installed in-line.

Information	Pages
Selection and calculation	218

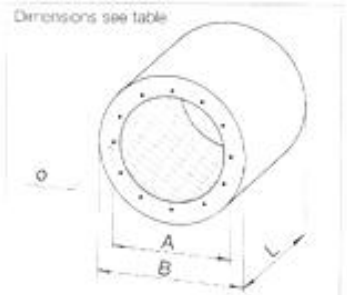

RSD



Type ø	Ref. No.	Nominal length	Dimensions in mm L	A	B	Tapped hole ø	Nominal weight kg	Attenuation D_n dB 125	250	500	1000	2000	4000	8000	Average attenuation
RSD 225/ 300	8734	1	300	259	404	6 x M 6	7	2	5	9	14	13	8	6	8
RSD 225/ 600	8735	2	600	259	404	6 x M 6	12	4	10	17	27	25	17	14	15
RSD 225/ 900	8736	3	900	259	404	6 x M 6	17	7	13	25	33	31	20	16	20
RSD 250/ 300	8737	1	300	286	404	6 x M 6	7	3	5	8	8	9	7	5	8
RSD 250/ 600	8738	2	600	286	404	6 x M 6	12	5	10	16	24	19	14	10	15
RSD 250/ 900	8739	3	900	286	404	6 x M 6	16	6	12	22	26	21	15	11	18
RSD 280/ 400	8740	1	400	322	454	8 x M 8	10	4	5	8	14	9	8	6	8
RSD 280/ 800	8741	2	800	322	454	8 x M 8	18	7	9	16	28	18	17	14	14
RSD 280/1200	8742	3	1200	322	454	8 x M 8	25	9	12	23	37	23	20	16	18
RSD 315/ 400	8743	1	400	356	504	8 x M 8	11	3	3	7	13	8	7	5	5
RSD 315/ 800	8744	2	800	356	504	8 x M 8	19	6	8	14	26	16	12	9	12
RSD 315/1200	8745	3	1200	356	504	8 x M 8	28	9	12	21	36	18	17	14	18
RSD 355/ 400	8746	1	400	395	564	8 x M 8	13	3	4	7	11	7	6	4	6
RSD 355/ 800	8747	2	800	395	564	8 x M 8	23	6	7	13	22	14	12	8	11
RSD 355/1200	8748	3	1200	395	564	8 x M 8	33	8	11	17	29	18	15	10	17
RSD 400/ 400	8749	1	400	438	564	12 x M 8	12	3	4	6	9	7	5	3	6
RSD 400/ 800	8750	2	800	438	564	12 x M 8	21	6	6	12	18	13	12	8	9
RSD 400/1200	8751	3	1200	438	564	12 x M 8	30	7	10	14	22	18	13	9	15
RSD 450/ 400	8752	1	400	487	634	12 x M 8	17	4	5	8	10	8	7	5	8
RSD 450/ 800	8753	2	800	487	634	12 x M 8	27	6	7	13	18	13	12	9	11
RSD 450/1200	8754	3	1200	487	634	12 x M 8	38	8	10	18	23	17	14	10	15
RSD 500/ 600	8755	1	600	541	714	12 x M 8	27	4	5	9	11	9	9	6	8
RSD 500/ 900	8756	2	900	541	714	12 x M 8	36	6	8	14	16	13	13	9	12
RSD 500/1200	8757	3	1200	541	714	12 x M 8	45	8	11	22	24	17	16	12	17
RSD 560/ 600	8758	1	600	605	804	8 x M 10	32	3	5	9	9	8	8	6	8
RSD 560/1200	8759	2	1200	605	804	8 x M 10	52	6	10	19	19	16	13	10	15

Designed by Amina Parveen Eastern Engineering Catering Engineering LTD
203 Garnett street, Bradford, West Yorkshire, BD3 9HA
01274 393 494 – easternvetilation@hotmail.co.uk

Roof hood HF



Description

Ventilation hood for air exit above roof, suitable for both industrial and comfort ventilation. The air is ejected in an upwards-directed jet. This avoids contaminating the air in the vicinity of the hood, and soiling of the area around the hood. The ejection is so effective that you can install a fresh air inlet in the immediate vicinity of the hood, without any special precautions.

The hood is made of galvanised sheet steel, and can also be supplied in other materials such as stainless steel sheet 1.4301, stainless acid-resistant steel sheet 1.4404, aluzinc AZ185 and painted in various colours, to special order. It has a net over the opening and an internal rain funnel to collect rainwater and snow, which is drained out of the hood through a hose. The hose can withstand temperatures of between -45 and +65 °C.

The hood has a flange connection, which includes a mating flange. The hood can be ordered with other connections, however.

To avoid damage to the net in the opening the hood is supplied with transport protection. This must be removed before the hood is taken into service.

The hood is delivered with three turnable lifting and anchoring wire-loops. A single wire-loop shall not be exposed for forces exceeding 1500 N.

Ordering example

	HF	630
Product		
Dimension Ød		

Dimensions

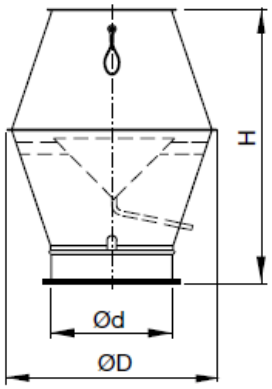

Ød nom	ØD mm	H mm	m kg	Roof through connection TGR 50 mm Size	Roof through connection TGR 100 mm Size
400	685	905	11,1	5	6
500	855	1055	20,0	6	7
630	1075	1295	38,0	8	9
800	1360	1640	63,0	9	10
1000	1600	2110	89,1	11	12
1250	2020	2615	118	14	15

Technical data

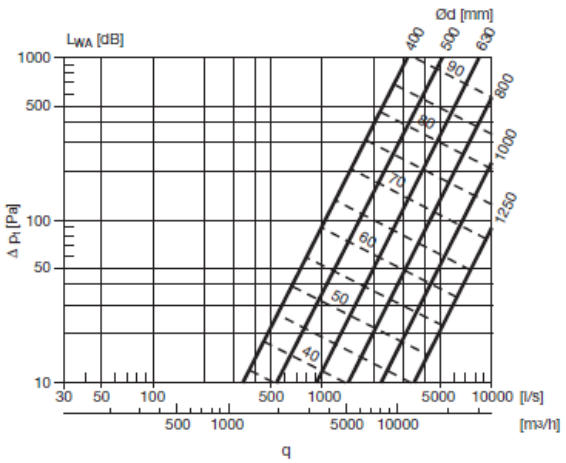

Designed by Amina Parveen Eastern Engineering Catering Engineering LTD
203 Garnett street, Bradford, West Yorkshire, BD3 9HA
01274 393 494 – easternvetilation@hotmail.co.uk

Fresh Air Fan: Vent-Axia 355mm

EuroSeries® (ESP)

Plate Mounted Axial Fans

ROOF UNITS

from Vent-Axia

Features & Benefits

- Die cast aluminium impellors
- Fully speed controllable
- Air Volumes up to 13.89m³/s
- Sizes 315 to 1000 dia protected to IP54
- Operating Temperatures from -40°C up to +70°C Motor
- Insulation Class F
- Thermal overload for motor protection
- All units reversible - Supply or Extract
- Tough epoxy paint finish
- Quality Assurance to BS EN ISO 9001:1994
- Performance tested to ISO 5801

Dimensions (mm)

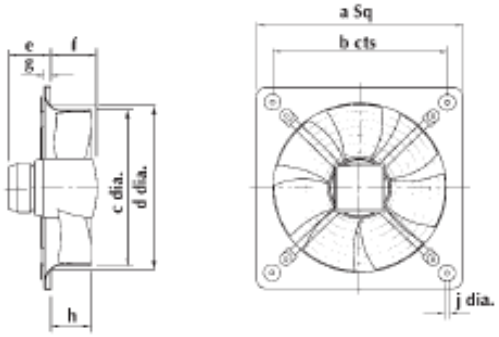

Dia	a	b	Øc	Ød	e	f	g	h	Øj	Kg
250	370	320	256.5	264.5	84	80	6	80	9	3.4
315	435	385	320	328	84	84	19	75	9	6.3
355	485	435	367	372	86	97	21	75	9	7.3
400	540	490	412	420	93	100	12	88	9	10.2
450	575	535	463	480	86	139	14	96	11	15.8
500	655	615	517	528	84	141	16	104	11	17.3
560	725	675	568	589	81	142.5	16	119	11	24
630	805	750	643	664	82	142.5	20	130	11	45
710	850	810	720	763	37	176.5	20	150	14.5	31
800	970	910	804	869	34	244	17	193	14.5	38
1000	1170	1110	1009	1067	40	284	20	200	14.5	84

Designed by Amina Parveen Eastern Engineering Catering Engineering LTD
203 Garnett street, Bradford, West Yorkshire, BD3 9HA
01274 393 494 – easternvetilation@hotmail.co.uk

Vent-Axia.

Roof Units



Performance Guide

Size	Phase	Pole	Fan Stock Ref	RPM	IP Rating	m³/s 0	25	50	70	100	125	150	200	225	250	300	Motor kW	S.C. Amps	F.L.C. Amps	dBA @ 3m
250	1	2	ESP25012	2440	IP44	0.46	0.42	0.4	0.37	0.31	0.21	0.14					0.14	1.15	0.6	59
250	3	2	ESP25032	2700	IP44	0.59	0.57	0.55	0.53	0.5	0.45						0.35	2.5	0.63	61
315	1	2	ESP31512	2690	IP54	1.02	0.98	0.96	0.92	0.88	0.84	0.8	0.68				0.48	6	2.1	64
315	3	2	ESP31532	2800	IP54	1.06	1.03	1.01	0.98	0.95	0.92	0.89	0.81	0.69			0.48	5	0.9	60
250	1	4	ESP25014	1340	IP44	0.21	0.17	0.12	0.07								0.04	0.3	0.16	44
315	1	4	ESP31514	1300	IP54	0.57	0.5	0.42	0.34								0.15	1.38	0.7	50
355	1	4	ESP35514	1330	IP54	0.96	0.87	0.76	0.63								0.19	1.45	0.84	53
400	1	4	ESP40014	1350	IP54	1.4	1.28	1.16	0.97								0.29	2.4	1.45	56
400	3	4	ESP40034	1350	IP54	1.48	1.38	1.28	1.08								0.26	2.1	0.56	51
450	1	4	ESP45014	1370	IP54	1.72	1.6	1.46	1.34	1.11							0.36	3.6	1.6	61
450	3	4	ESP45034	1380	IP54	1.8	1.7	1.59	1.43	1.24							0.36	2.6	0.8	56
500	1	4	ESP50014	1290	IP54	2.1	1.97	1.82	1.64	1.41							0.51	4.3	2.3	55
500	3	4	ESP50034	1380	IP54	2.27	2.15	2.05	1.9	1.75	1.54						0.55	3.7	1.05	58
560	1	4	ESP56014	1320	IP54	3.72	3.58	3.44	3.32	3.11	2.94	2.71					1.4	9.3	6	63
560	3	4	ESP56034	1220	IP54	3.43	3.24	3.08	2.92	2.67	2.38	2.05					1	7	1.8	70
630	1	4	ESP63014	1320	IP54	5.09	4.92	4.77	4.62	4.41	4.26	4.02	3.47	3.14	2.72		2.2	28	9.9	70
630	3	4	ESP63034	1360	IP54	5.19	5.01	4.86	4.71	4.47	4.23	4.02	3.41				1.9	14	3.2	64
710	3	4	ESP71034	1290	IP54	6.81	6.65	6.49	6.34	6.16	5.94	5.72	5.22	4.82	4.42		2.9	19	5.3	72
800	3	4	ESP80034	1270	IP54	10.39	10.1	9.81	9.57	9.18	8.79	8.45	7.73	7.2	6.72	5.51	4.7	29	8.3	78
355	1	6	ESP35516	950	IP54	0.69	0.53										0.09	1.2	0.46	44
355	3	6	ESP35536	910	IP54	0.62	0.35										0.09	0.5	0.25	45
400	1	6	ESP40016	940	IP54	0.98	0.81										0.13	1.4	0.6	45
400	3	6	ESP40036	920	IP54	0.96	0.79										0.11	0.9	0.28	50
450	1	6	ESP45016	915	IP54	1.15	0.99										0.17	2.7	0.77	50
450	3	6	ESP45036	890	IP54	1.16	1	0.75									0.12	1	0.28	51
500	1	6	ESP50016	910	IP54	1.45	1.27	0.96									0.25	4.74	1.35	54
500	3	6	ESP50036	900	IP54	1.52	1.35	1.16									0.23	1.5	0.56	56
560	1	6	ESP56016	880	IP54	2.46	2.25	1.95	1.65								0.43	4.6	1.95	56
560	3	6	ESP56036	860	IP54	2.39	2.15	1.83	1.42								0.39	1.75	0.81	56
630	1	6	ESP63016	880	IP54	3.33	3.06	2.75	2.46								0.6	5.3	2.7	57
630	3	6	ESP63036	890	IP54	3.37	3.1	2.8	2.48								0.59	3.6	1.3	59
710	1	6	ESP71016	850	IP54	4.56	4.24	3.9	3.53								0.89	8	4.1	60
710	3	6	ESP71036	860	IP54	4.71	4.41	4.11	3.8	3.29							1.1	7.7	2.2	62
800	3	6	ESP80036	900	IP54	6.3	5.94	5.58	5.22	4.67	3.95						1.4	9.8	2.7	64
1000	3	6	ESP100036	935	IP54	13.89	13.35	13.04	12.73	12.35	11.92	11.46	10.88	10.26	9.72		5.5	67	10.5	77
630	3	8	ESP63038	630	IP54	1.79	1.29										0.31	1.5	0.65	55
710	3	8	ESP71038	630	IP54	3.4	2.98	2.37									0.43	3.3	1.1	55
800	3	8	ESP80038	670	IP54	4.82	4.35	3.84									0.69	5	1.75	58
1000	3	8	ESP100038	670	IP54	9.78	9.35	8.91	8.42	7.66	6.63						2.2	13	4.2	65

For fans wired to reverse run, duty reduced by 30%

Designed by Amina Parveen Eastern Engineering Catering Engineering LTD
203 Garnett street, Bradford, West Yorkshire, BD3 9HA
01274 393 494 – easternvetilation@hotmail.co.uk

Catering Engineering 01274 393494

easternventilation@hotmail.co.uk

Sketch

Internal Extraction Hood

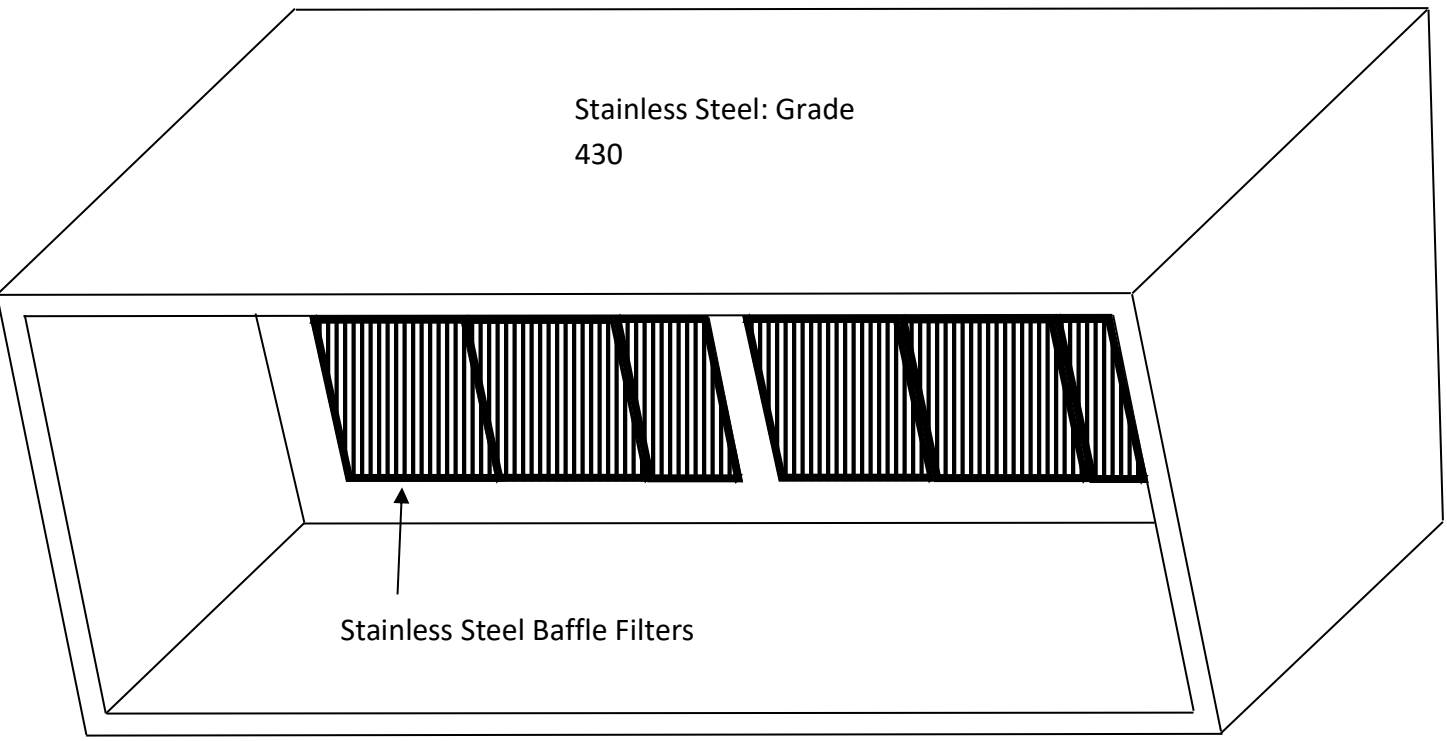

Our selection is based on canopy size of 4.5mtrs x 1.5 metres deep with a face velocity of .5 m/s

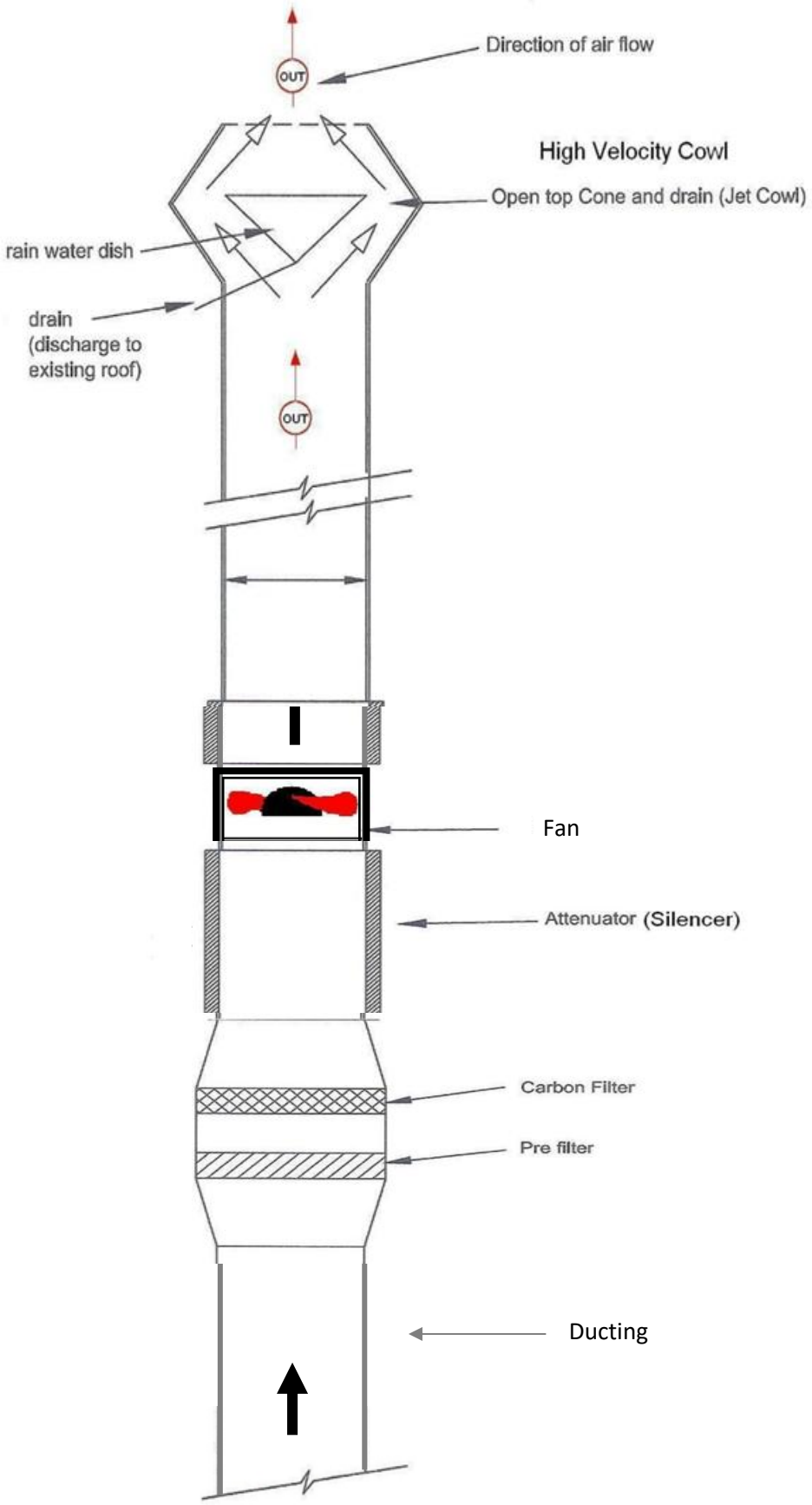

Designed by Amina Parveen Eastern Engineering Catering Engineering LTD
203 Garnett street, Bradford, West Yorkshire, BD3 9HA
01274 393 494 – easternvetilation@hotmail.co.uk

R.E Eden Banqueting, 297, Bradford Road, Batley, WF17 6HY

NEW PROPOSED LAYOUT GROUND FLOOR

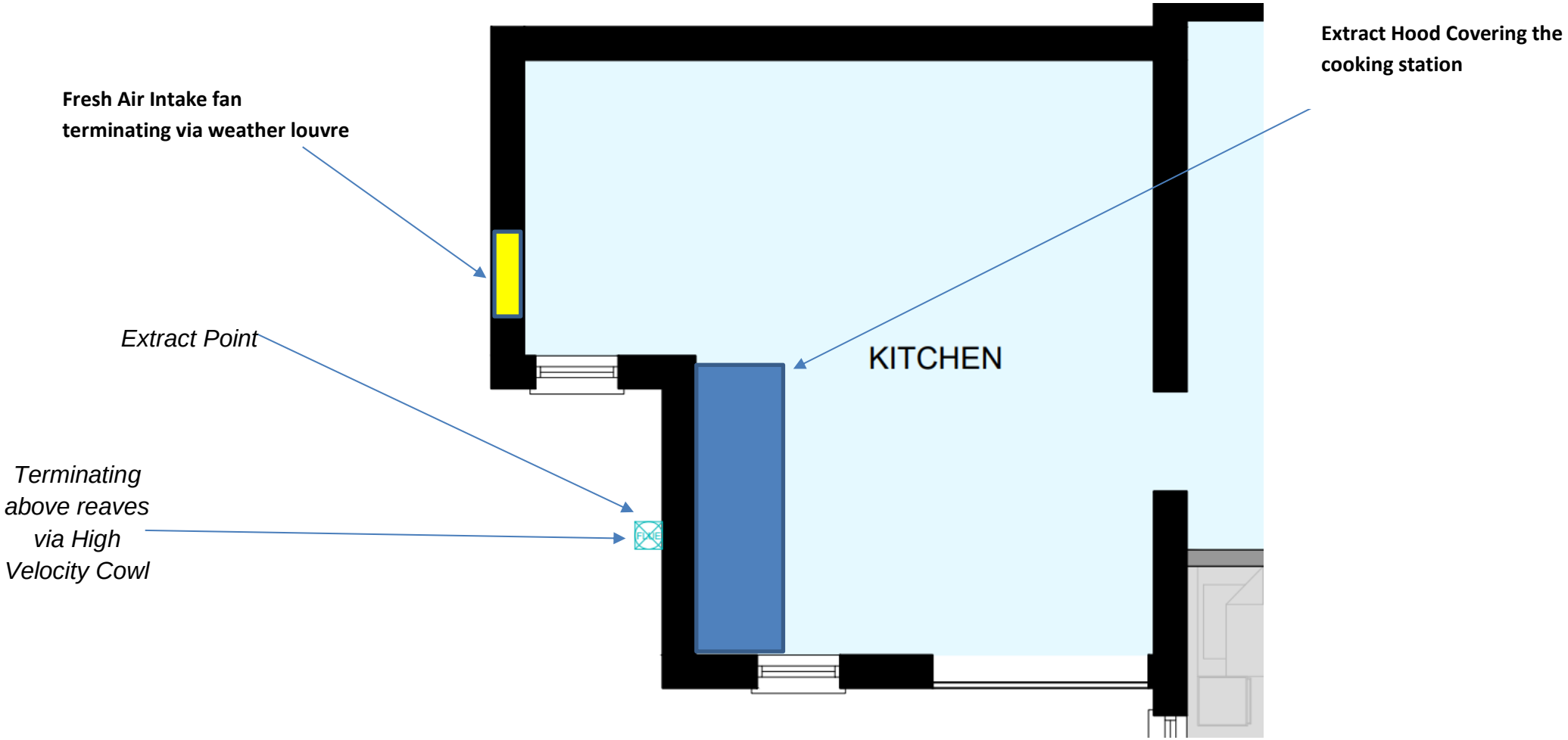

Designed by Amina Parveen Eastern Engineering Catering Engineering LTD
203 Garnett street, Bradford, West Yorkshire, BD3 9HA
01274 393 494 – easternvetilation@hotmail.co.uk



External flue system painted matt black

Designed by Amina Parveen Eastern Engineering Catering Engineering LTD
203 Garnett street, Bradford, West Yorkshire, BD3 9HA
01274 393 494 – easternvetilation@hotmail.co.uk

Extraction System Maintenance Schedule

The maintenance of the canopy & extraction unit must be kept on to regularity, to ensure efficient and reliable functioning of the extraction unit. Over the course of the life of the canopy, the grease-filters will require regular cleaning by you. However, the ducting filters will need replacing in order to conform to council requirement. We can replace the carbon-filters, pre-filters and grease-filters regularly, thus keeping your kitchen within the council requirements. However, please use this document as a guide to your Maintenance schedule, as recommended by the manufacturer.

Canopy Care:

The stainless steel canopy requires regular weekly clean, with non-corrosive detergents. In addition, canopies require bi-annual inspection services to ensure trouble free operating. All grease drain points should be checked every 6 months for blockage and cleaned as required. Grease collection trays emptied as required.

Cautionary note: All metal stainless steel surfaces on the canopy units should be cleaned with a recommended solvent/cleaner, because caustic solutions or abrasive material should be avoided, as they will scratch the surface, thus encouraging bacteria growth.

Grease-filters:

Replacement filters are supplied as and when they become damaged, which fit your canopy filter banks and requirements. The filters come designed with two handling grips. We recommend the filter and collection drawers are cleaned once a week to ensure no excess dirt and grease can accumulate. Both mesh and baffle type filter cells are sized to facilitate their cleaning with any commercial dishwashing machine. Soaking for 15 minutes in a warm degreasing agent can also clean mesh type filters, thus ensuring a clear passage for gaseous fumes to pass through.

Cautionary note: The extraction system has to be stopped before the commencement of cleaning, because this avoids any unfiltered greasy air

Designed by Amina Parveen Eastern Engineering Catering Engineering LTD
203 Garnett street, Bradford, West Yorkshire, BD3 9HA
01274 393 494 – easternvetilation@hotmail.co.uk

entering the system. Otherwise, grease deposits within the system are a potential fire hazard.

Pre-filters:

Replacement filters are supplied and must be changed (see appendix), which fit your ducting filter bank and requirements. Due to their inherent design, regular cleaning isn't required only replacement. Otherwise, they will lose the efficiency to pre-filter grease away from the carbon-filter, thus causing contaminating the carbon-filter

Carbon-filters:

Replacement filters are supplied and must be changed (see appendix), which fit your ducting filter bank and requirements. Due to their inherent design, regular cleaning isn't required, ensuring the pre-filters are replaced; otherwise the grease contamination does destroy the activated carbon, thus unable to inhibit gaseous odours as intended.

Fan:

If you encounter undue noise or vibration, cleaning the fan impeller can often cure vibration. However, if the problem persists after cleaning, consult the flue supplier or the fan manufacture. Importantly, always ensure the electrical supply has been isolated before carrying our any work on the fan. Check if the flexible couplings (where fitted) are secure and undamaged.

Fan motors with grease fittings should be lubricated using a low pressure grease gun with Shell Alvania No. 3 grease.

Ducting:

By you: It is necessary that annual inspection is carried out. When necessary a qualified TR19 specialist cleaner is contracted to degrease the accumulated congealed grease. Because, it is paramount a clear unrestricted path does not choke the air-flow of the ducting, including the balance and efficient suction capability of the fan. Secondly, grease is a serious health and safety issue: fire hazard, noxious odours, noise pollution, and insurance requirements.

The recommended cleaning periods for extract ductwork as published in the TR19 document TR/17 guide to good practise.

Designed by Amina Parveen Eastern Engineering Catering Engineering LTD
203 Garnett street, Bradford, West Yorkshire, BD3 9HA
01274 393 494 – easternvetilation@hotmail.co.uk

Speed Controller Operation:

The correct setting of the speed controller is paramount for the safe and prudential running of the fan and switch. You should make sure the speed controller is adjusted correctly then set and marked in accordance to manufacturer and fitters recommendations.

Cautionary note: When the controller is turned up to evacuate excessive smoke, the controller should then be returned to its marked and set position; to avoid excessive wear and tear.

Handling Components:

When handling any components of a canopy, it is imperative that operative wear proper, gripping cut-resistant work gloves for protection against metal edges, as well as the detergents and cleaning agents used. No matter how well finished a filter panel may be, it is easy to cut soft water soaked skin during the cleaning process. Grease filters by their very nature will have a coating of grease and therefore will be slippery and difficult to handle. Suitable gloves can be obtained easily through most suppliers of personal protective equipment. Access to filters for removal and replacement will often mean reaching above head height and as such, suitable access equipment and or safe working procedures may be required.

Summary of maintenance schedule:

Firstly, deciding upon the frequency and intensity of a cleaning maintenance schedule is subjective. The responsibility ultimately lies ultimately with the manager of the facility. However, quite simply if a surface or component looks dirty, then it needs cleaning.

Finally, regular inspections must be carried out on all surfaces, especially non-visible surfaces, because quire simply “What is out of sight is often out of mind” therefore neglected. It is important Inspections of this nature should be included in the maintenance schedule for any kitchen installation as well as the extraction system.

Care and Maintenance of Stainless Steel:

All grades of stainless steel will stain and discolour due to surface deposits and can never be accepted as completely maintenance free. In order to

Designed by Amina Parveen Eastern Engineering Catering Engineering LTD
203 Garnett street, Bradford, West Yorkshire, BD3 9HA
01274 393 494 – easternvetilation@hotmail.co.uk

achieve maximum corrosion resistance the surface of the stainless steel must be kept clean. Provided the grade of stainless steel and the surface finish are correctly selected and cleaning schedules carried out on a regular basis, good performance and long service life assured.

Factors Affecting Maintenance

Surface contamination and the formation of deposits must be prevented. These deposits may be minute particles of iron or rust from other sources used on the building of new premises and not removed until after stainless steel items have been fixed. Industrial and even naturally occurring atmospheric conditions can produce deposits which can be equally corrosive e.g. salt deposits and marine conditions.

A working environment which offers more aggressive conditions, e.g. hot humidity, such as in a swimming pool, increases the speed of discolouration and therefore requires the maintenance to be on a more frequent basis. Modern processes use many cleaners, sterilizers and bleachers for hygienic purposes.

All these proprietary solutions, when used in accordance with makers instructions are safe but not if incorrectly used, (e.g. warm surface of any quality of stainless steel). Strong acid solutions are sometimes used to clean masonry and tiling of buildings but they should never be permitted to come into contact with metals, including stainless steel. If this should happen the acid solution must be removed immediately by copious applications of water.

Maintenance Programme

With care taken during fabrication and installation, cleaning before handing over to the client should present no special problems, although more attention than normal may be required if the installation periods has been prolonged. Where surface contamination is suspected, immediate attention to cleaning after site fixing will encourage a trouble free

Precautions

Acids should only be used for onsite cleaning when all other methods have been proved unsatisfactory. Rubber gloves should be used and care taken to see that acid cleaners are not spilt over adjacent areas. Special precautions

Designed by Amina Parveen Eastern Engineering Catering Engineering LTD
203 Garnett street, Bradford, West Yorkshire, BD3 9HA
01274 393 494 – easternvetilation@hotmail.co.uk

are necessary with oxalic acid. Solvents should not be used in enclosed places. Smoking must be avoided when using solvents. In all instances follow the manufacturers' safety instructions.

In general, cleaning is carried out to restore the original surface appearance to prevent corrosion and maintain hygienic conditions.

Stainless steel is easy to clean, and washing with soap or a mild detergent and warm water, follow by a clear water rinse is usually quite adequate for domestic, architectural and commercial catering equipment. If the water is hard, the steel should then be dried with a soft cloth to prevent water spotting.

Hygiene

Thorough cleaning is particularly important in catering and medical applications where cleanliness is required not only for aesthetic purposes but also for hygiene. Stainless steels smooth and pore-free surface does not harbour bacteria and is easily cleaned, if necessary using the most vigorous techniques.

Maintenance chart appendix:

Appendix A - Establishment Categories:

Category	Description
Light/Medium	Pub & Bar Food, small cafes, coffee/tea shops.
Medium	Italian/French restaurants, hotel restaurants, family pub restaurants, pizza restaurants, supermarket restaurants.
Medium/High	Small low output fast food restaurants, steak houses, kebab/chip shops.
High	Large, high output fast food restaurants, Mexican restaurants, Oriental & Asian restaurants.
Very High	Food factories

Appendix B - Component Cleaning Cycles:

Establishment Category / Filter Type	Light/Medium	Medium	Medium/High	High	Very High
Baffle filter wash cycle	7 Days	5 Days	3 Days	1 Day	1 Day
Mesh filter wash cycle	7 Days	5 Days	5 Days	5 Days	5 Days

Designed by Amina Parveen Eastern Engineering Catering Engineering LTD
203 Garnett street, Bradford, West Yorkshire, BD3 9HA
01274 393 494 – easternvetilation@hotmail.co.uk

Electrostatic filter - Maintenance swap out	6 Months	3 Months	3 Months	3 Months	3 Months
Carbon filter replacement	6 Months	3 Months	3 Months	3 Months	3 Months
UV Tube wipe down	2 Months	6 Weeks	4 Weeks	2 Weeks	1 Week
UV Tube replacement	8000 Hours	8000 Hours	8000 Hours	8000 Hours	8000 Hours
Grease drawers clean	7 Days	5 Days	3 Days	1 Day	1 Day
Ductwork clean*	12 Months	3 Months	3 Months	4 Months	3 Months

**Cautionary note: Regular visual inspection should be carried out on all components. If there is UV in system the cleaning increases by 3 times.*

Appendix C – Stainless Steel Maintenance:

Problem	Cleaning Agent	Comments
Routine cleaning	Soap or mild detergent and water, e.g. Fairy Liquid, Deepio.	Use of a sponge to rinse with warm clean water and a dry cloth to wipe dry.
Fingerprints	Soap or mild detergent and water and/or organic solvent, e.g. Acetone or Alcohol.	Use of a sponge to rinse with warm clean water and a dry cloth to wipe dry.
Stubborn stains & Discolouration	Mild cleaning solutions without abrasives, e.g. Cif or Nilco stainless steel cleaning cream.	Use of a sponge to rinse with warm clean water and a dry cloth to wipe dry.
Oil or grease marks	Soap or mild detergent and water and/or organic solvent, e.g. Acetone or Alcohol.	Use of a sponge to rinse with warm clean water and a dry cloth to wipe dry.
Rust, Corrosion, Oxidation	Oxalic acid, the solution applied with a swab, allowed to stand for 10 – 20 minutes before being washed away with water	Use of mild cleaning cream to give a final finish after rinse. Use of a sponge to rinse with warm clean water and a dry cloth to wipe dry.
Scratches	Brushed finish, impregnated nylon pads, or fine wire wool. Bright finish, use of metal polish like Peek, Brasso, and T-Cut and cotton mop wheel.	Avoid iron steel wool, particle become embedded and may rust over time.

Designed by Amina Parveen Eastern Engineering Catering Engineering LTD
203 Garnett street, Bradford, West Yorkshire, BD3 9HA
01274 393 494 – easternvetilation@hotmail.co.uk

Disclaimer

Whilst every care is taken in ensuring the information contained herein is accurate, no responsibility implied, or otherwise, is accepted for loss or damage incurred due to this information. It is the responsibility of the reader to ensure the method used is suitable for his particular application and he should satisfy himself before proceeding with a trial or sample component.

Designed by Amina Parveen Eastern Engineering Catering Engineering LTD
203 Garnett street, Bradford, West Yorkshire, BD3 9HA
01274 393 494 – easternvetilation@hotmail.co.uk