

Detail 1a
HB2 Kerb
255 x 125 Half Batter Kerb Type HB

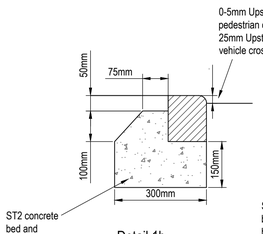

Detail 1b
BN3 Kerb
150 x 125 Bullnosed Kerb Type BN

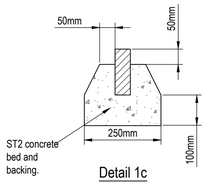

Detail 1c
EF Edge Kerb
150 x 50 Edging Edging Type EF

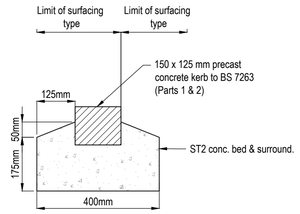

Detail 1d
CS2 Kerb
125 x 150 Square Channel Kerb Type CS

Kerb and Edging Details (BS EN 1340:2003)

Scale 1:10

Notes for kerbs

1. All linear dimensions are in millimetres unless stated otherwise.
2. The kerb base shall sit directly on sub-base at either its design level or lower.
3. The minimum depth of kerb base shall be 150mm. The minimum depth of edging base shall be 100mm.
4. The minimum thickness of sub-base below kerb base shall be 110mm or 150mm where no lower sub-base is specified.
5. All vertical faces on kerb base and backing shall be formed with shuttering.
6. Kerbs shall be backed up while the kerb base remains plastic (max. 6hrs after batching).
7. Mortar shall comply with SHW Clause 2404 designation (i).
8. Kerb reference numbers are defined in BS EN 1340:2003.
9. For kerbline radii not exceeding 12m, appropriate curved kerbs shall be used.
10. For kerbline radii exceeding 12m but not exceeding 20m, 610mm long straight kerbs shall be used.
11. Bond coat to Clause 920 shall be applied to the carriageway surface in accordance with BS 434: Part 2 prior to the laying of extruded asphalt kerbing.

Table 1 - Sub-Base + Capping Depths

CBR	Sub-base Only	Sub-base & Capping
≤ 2%	-	150mm + 600mm
2.5%	350mm	150mm + 400mm
3%	300mm	150mm + 350mm
4%	270mm	150mm + 300mm
>5%	250mm	150mm + 250mm

Notes:
1. If sub-grade is tested as frost sensitive min. construction of pavement to be 450mm.
2. Sub-base and/ or capping to be determined by site testing at formation level and agreed with Buckingham CC.
3. A mean Plasticity Index value of 30 % was recorded in the near surface soils, which indicates an equilibrium subgrade CBR value of 3% has been assumed across the site.

General Notes

1. Where this drawing has been issued in electronic .dwg format, it has been done so in good faith. JNP Group do not take any responsibility for any inaccuracies in the electronic data, which should be checked against the paper (or .pdf) drawing issue. Any apparent discrepancies should be immediately reported to JNP Group. The electronic .dwg file should not be assumed to be to scale and should not be used for 'overlaying', setting out or checking of any third party information. All dimensions should be taken from the paper (or .pdf) version of the drawing. Electronic drawings may contain third party information. JNP Group take no responsibility for this information, which should be checked against the originators paper drawing(s).
2. All dimensions are millimetres (mm), and levels are in metres (m) unless noted otherwise and should be checked on site prior to construction/fabrication.
3. Do not scale from this drawing. Only figured dimensions are to be relied upon. Don't hesitate to get in touch with JNP Group if additional information is required.
4. Any discrepancies between drawings of different scales and between drawings and specifications, where appropriate, to be reported to JNP Group for decision.
5. Copyright reserved. This drawing may only be used for The Client and location specified in the title block. It may not be copied or disclosed to any third party without the prior written consent of JNP Group.
6. This drawing should only be used for construction if the drawing status is "Construction". JNP Group takes no responsibility for construction works undertaken to drawings that are not marked with this status.

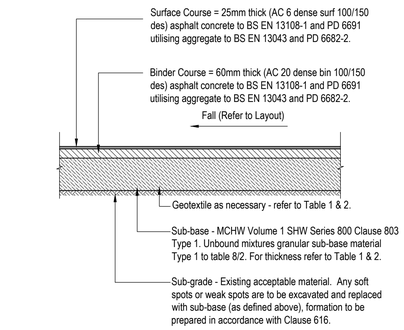

Tarmac Private Drive/Parking Bay Construction Detail

Scale 1:25

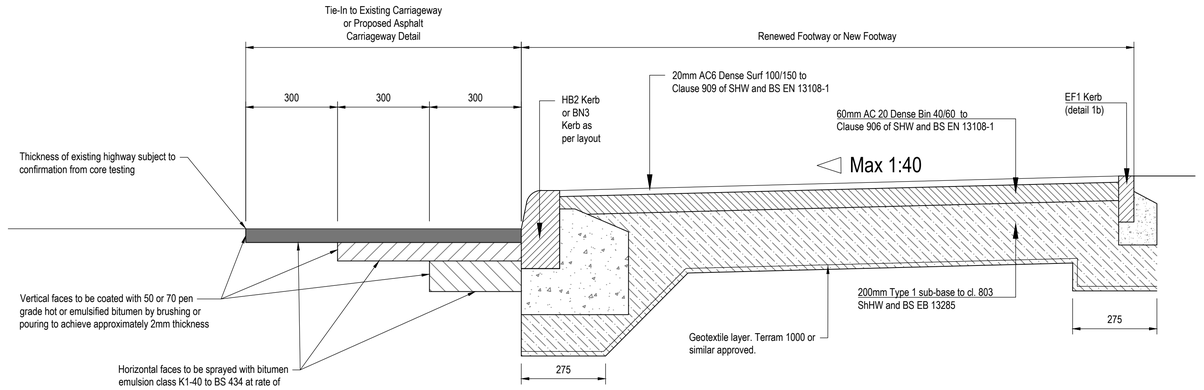

Typical Footway Construction & Tie-In to Existing Carriageway

Scale 1:10

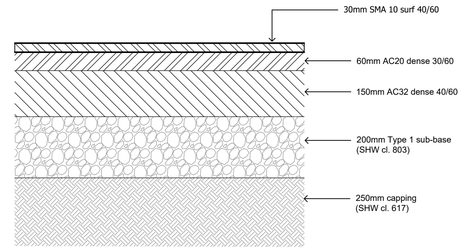

Asphalt Carriageway Construction

Scale 1:10

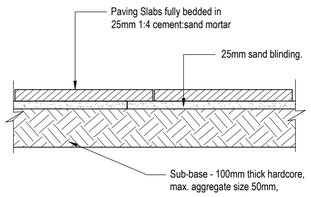

Private Paths Construction Detail

Scale 1:10

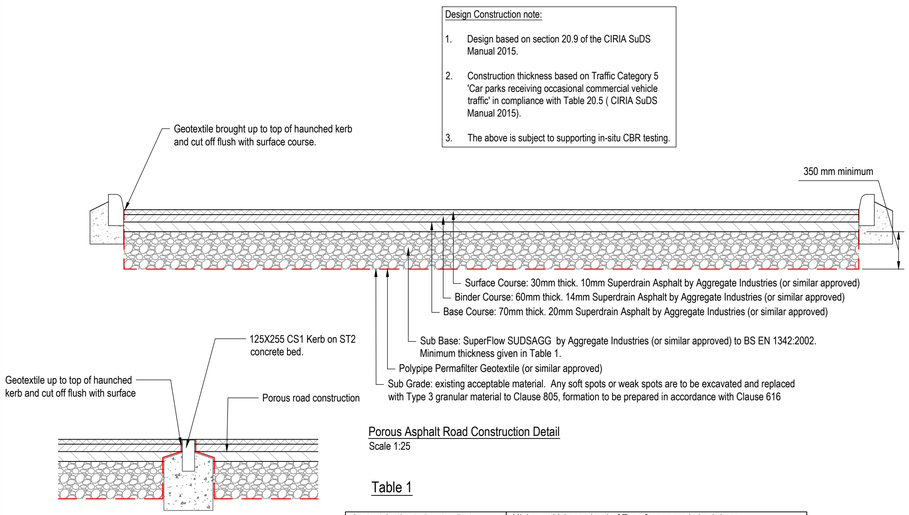

Porous Asphalt Road Construction Detail

Scale 1:25

Full Height Check Dam Detail

Scale 1:25

Table 1

Soaked California Bearing Ratio (CBR) Values	Minimum thickness (mm) of Type 3 open graded sub-base (Consolidated in accordance with MCHW Volume 1 Clause 803, table 8/1)
Less than 2.5%	Subgrade improvement required
2.5% - 3%	450
3% - 4%	375
>4%	350

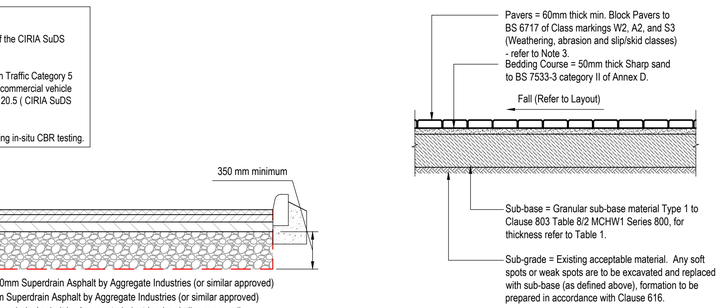

Block Paved with Vehicular Overrun

Scale 1:25

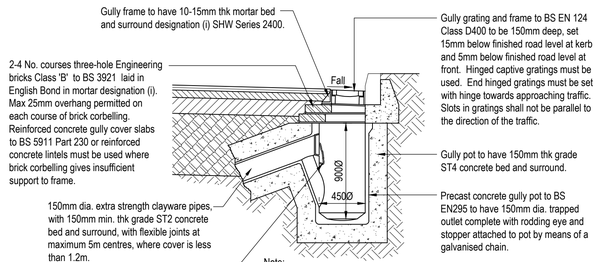

Typical Precast Concrete Gully

Scale 1:25

Rev.	Date	Description	Drn / Chk'd / App'd
P01	16/04/2025	First Issue.	SH / LC / LC

Suitability: S3 - Suitable for Review & Comment

JNP GROUP
CONSULTING ENGINEERS
Chesham ● Brighouse ● Bristol ● Glasgow ● Hartlepool ● Leamington Spa ● Sheffield
T: 01926 889955 E: bristol@jnpgroup.co.uk
www.jnpgroup.co.uk

Client: Halstead Homes (Yorkshire) Ltd

Job: Marsh Lane, Shepley

Title: External Works Construction Details (Sheet 1 of 1)

Classification: FI_60_20
Scale @ A1: AS SHOWN

Project - Originator - Volume/System - Level/Location - Type - Discipline - Number: B26074 - JNP-XX-XX- DR -C- 3010
Revision: P01
Document/Drawing Number

© Copyright JNP Group Ltd, 2022
JNP Group Internal Project Number: B26074