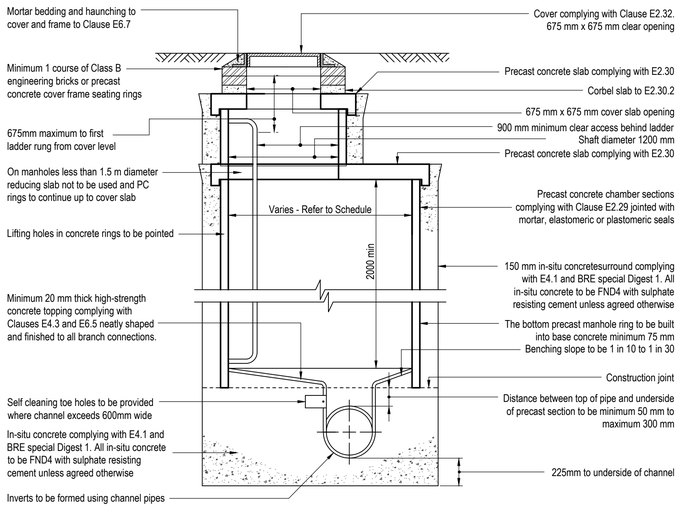

Vertical Section

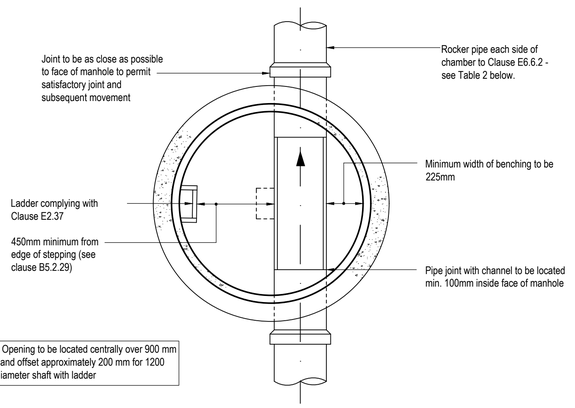

Note: Opening to be located centrally over 900 mm shaft and offset approximately 200 mm for 1200 mm diameter shaft with ladder

Plan Section

Typical Manhole Detail - Type 'A'

Dpeth from cover level to soffit of pipe 3 m to 6 m with ladder and reducing slab

Scale: 1:25

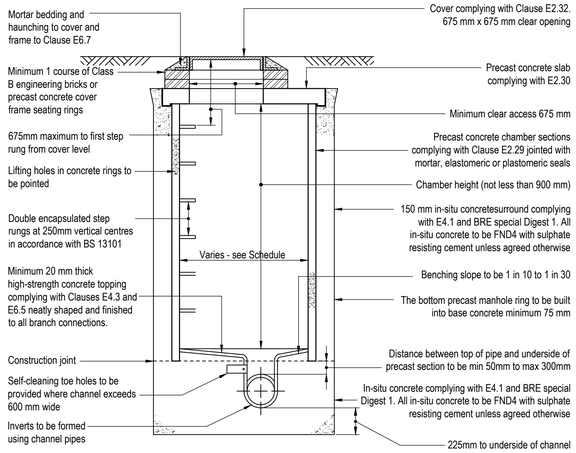

Vertical Section

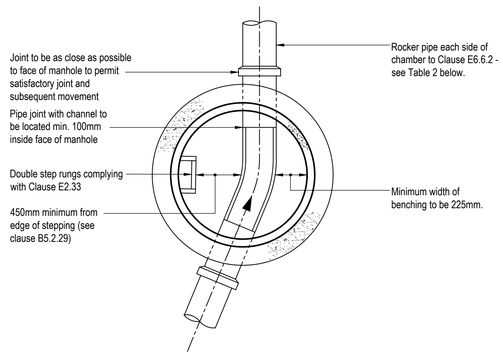

Plan Section

Typical Manhole Detail - Type B

Depth from cover level to soffit of pipe 1.5m to 3m

Scale: 1:25

Table 1 - Manhole Diameter

Diameter of Largest Pipe in Manhole (mm)	Internal Diameter of Manhole (mm)
Less than 375	1200
375 to 450	1350
500 to 700	1500
750 to 900	1800
Greater than 900	Pipe diameter + 900

Table 2 - Rocker Pipe Length

Nominal Diameter of Pipe (mm)	Effective Length (m)
150 to 600	0.6
601 to 750	1.0
750 and over	1.25

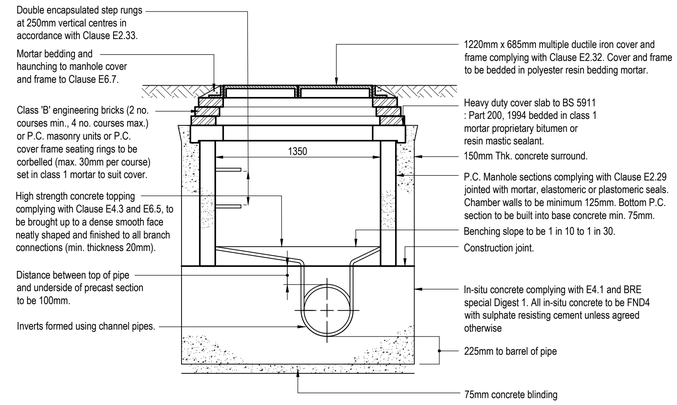

Vertical Section

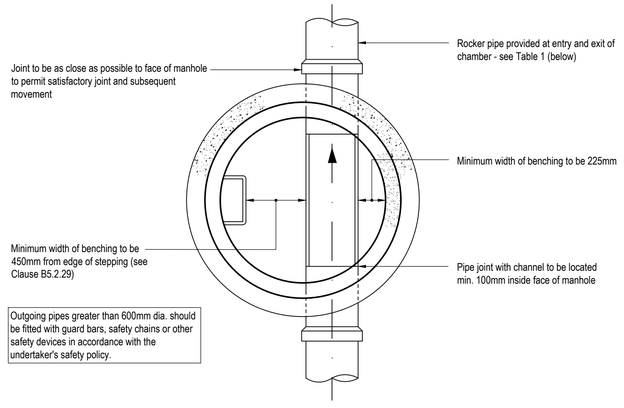

Outgoing pipes greater than 600mm dia. should be fitted with guard bars, safety chains or other safety devices in accordance with the undertaker's safety policy.

Plan Section

Typical Manhole Detail - Type C

Depth from ground level to soffit of pipe 1.0m - 1.5m

Scale: 1:25

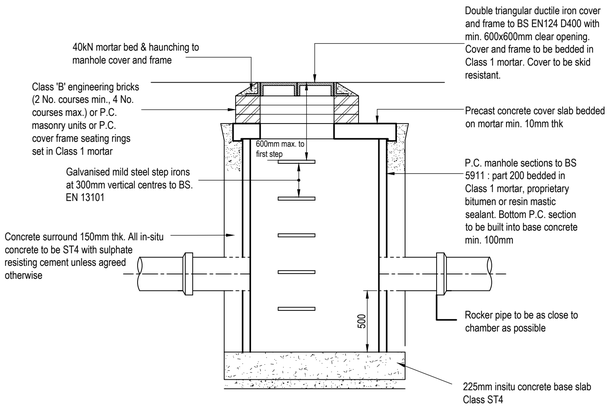

Typical Catchpit Manhole Detail

Scale 1:25

General Notes

1. Where this drawing has been issued in electronic .dwg format, it has been done so in good faith. JNP Group do not take any responsibility for any inaccuracies in the electronic data, which should be checked against the paper (or .pdf) drawing issue. Any apparent discrepancies should be immediately reported to JNP Group. The electronic .dwg file should not be assumed to be to scale and should not be used for 'overlaying', setting out or checking of any third party information. All dimensions should be taken from the paper (or .pdf) version of the drawing. Electronic drawings may contain third party information. JNP Group take no responsibility for this information, which should be checked against the originators paper drawing(s).
2. All dimensions are millimetres (mm), and levels are in metres (m) unless noted otherwise and should be checked on site prior to construction/fabrication.
3. Do not scale from this drawing. Only figured dimensions are to be relied upon. Don't hesitate to get in touch with JNP Group if additional information is required.
4. Any discrepancies between drawings of different scales and between drawings and specifications, where appropriate, to be reported to JNP Group for decision.
5. Copyright reserved. This drawing may only be used for The Client and location specified in the title block. It may not be copied or disclosed to any third party without the prior written consent of JNP Group.
6. This drawing should only be used for construction if the drawing status is "Construction". JNP Group takes no responsibility for construction works undertaken to drawings that are not marked with this status.

Rev	Date	Description	Drn / Chk'd / App'd
P01	16/04/2025	First Issue.	SH / LC / LC

Suitability: S3 - Suitable for Review & Comment

JNP GROUP CONSULTING ENGINEERS
Chesham • Brighouse • Bristol • Glasgow • Hartlepool • Leamington Spa • Sheffield
T: 01926 889955 E: bristol@jnpgroup.co.uk
www.jnpgroup.co.uk

Client: Halstead Homes (Yorkshire) Ltd

Job: Marsh Lane, Shepley

Title: Drainage Construction Details (Sheet 3 of 3)

Classification: FI_60_20

Scale @ A1: AS SHOWN

Project - Originator - Volume/System - Level/Location - Type - Discipline - Number: B26074 - JNP-XX-XX- DR -C- 3112 (Document/Drawing Number)

Revision: P01

© Copyright JNP Group Ltd. 2022

JNP Group Internal Project Number: B26074