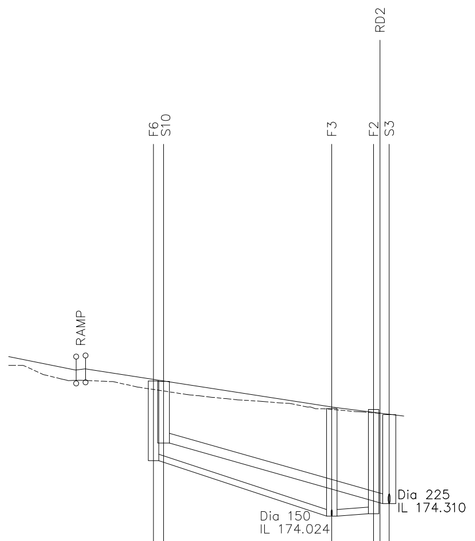

DATUM 171.000

RD1

CHAINAGE	0.000	6.090	LP 7.751	HP 8.831	10.000	16.713	17.823	20.000	30.000	37.262	42.087	42.822	43.886			
EXISTING GROUND LEVEL	177.500		177.141			176.844			176.655		176.434	176.392				
ALIGNMENT LEVEL	177.700	177.392	177.215		177.389	177.073			176.763	176.527						
VERTICAL ALIGNMENT	G= -4.000% 1: -25.0	38.3			G= -3.098% 1: -32.3											
HORIZONTAL ALIGNMENT		R= 26.000														
STORMWATER COVER LEVEL						177.132				176.364						
STORMWATER INVERT						175.707				174.310						
STORMWATER DETAILS						Dia 225 Circular CLAY 1 in 19 CLASS S B&S										
STORMWATER LENGTHS						26.014										
FOULWATER COVER LEVEL					177.140				176.503		176.483					
FOULWATER INVERT					175.300				174.024	174.024	174.080					
FOULWATER DETAILS						Dia 150 Circular CLAY 1 in 16 CLASS S B&S			Dia 150 Circular CLAY 1 in 100 CLASS S B&S							
FOULWATER LENGTHS						20.549				5.607						

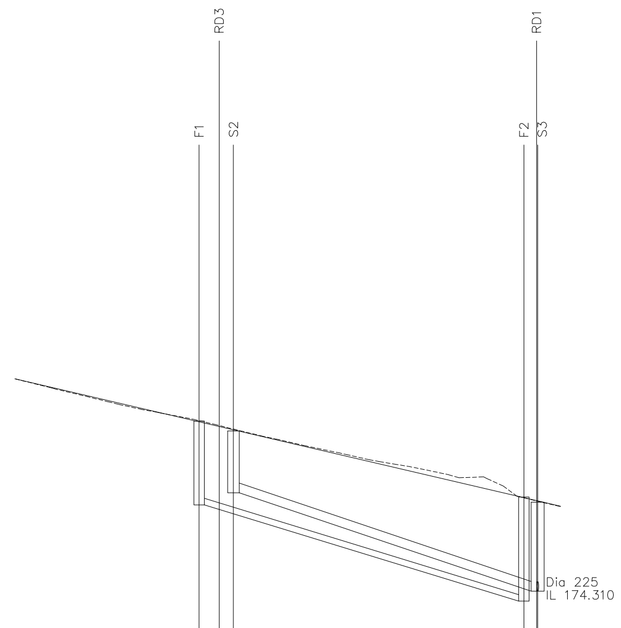

DATUM 171.000

RD2

CHAINAGE	0.000	10.000	20.000	21.240	23.509	25.200	30.000	40.000	50.000	58.692	60.000	60.044	60.274	62.898		
EXISTING GROUND LEVEL	179.208	178.714	178.297			177.823	177.379	176.997		176.399	176.260					
ALIGNMENT LEVEL	179.208	178.740	178.273			177.806	177.338	176.871		176.404	176.268					
VERTICAL ALIGNMENT			G= -4.673% 1: -21.4													
HORIZONTAL ALIGNMENT																
STORMWATER COVER LEVEL						178.005				176.364						
STORMWATER INVERT						176.580				174.310						
STORMWATER DETAILS						Dia 225 Circular CLAY 1 in 15 CLASS S B&S										
STORMWATER LENGTHS						35.074										
FOULWATER COVER LEVEL				178.232						176.483						
FOULWATER INVERT				176.300						174.080						
FOULWATER DETAILS						Dia 150 Circular CLAY 1 in 17 CLASS S B&S										
FOULWATER LENGTHS						37.453										

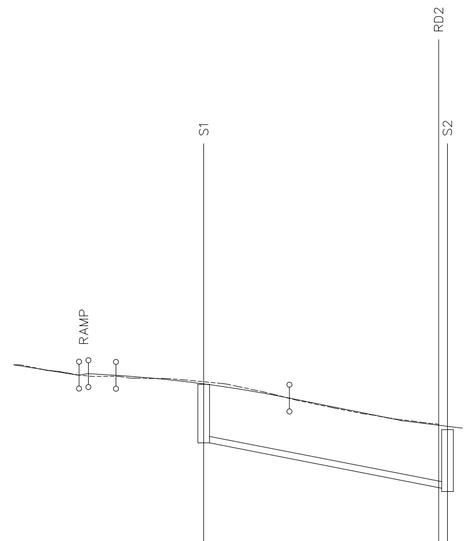

DATUM 173.000

RD3

CHAINAGE	0.000	3.237	LP 6.534	HP 6.821	10.000	11.777	13.560	15.000	20.000	21.887	24.426	24.461	25.000	30.000	31.777	40.000	48.976	49.991
EXISTING GROUND LEVEL	179.500		179.231						179.146					178.816		178.384	178.130	
ALIGNMENT LEVEL	179.500		179.262	179.226	179.223	179.216	179.226		179.209	179.107	178.971			178.800	178.731	178.402	178.212	
VERTICAL ALIGNMENT		G= -3.207% 1: -31.2	29.8	G=	G=	L= 20.000 1: KF= -7.27273 -80.0										G= -4.000% 1: -25.0		
HORIZONTAL ALIGNMENT			R= 26.000															
STORMWATER COVER LEVEL										179.048							178.005	
STORMWATER INVERT											177.698						176.655	
STORMWATER DETAILS											Dia 150 Circular CLAY 1 in 27 CLASS S B&S							
STORMWATER LENGTHS											27.793							

CODE For Adoption Under a Section 104 Agreement

1.All adoptable sewer works and material to be in accordance with "Code for Adoption" , The Relevant British/European and Yorkshire Waters Standards/requirements/Addendum to the Mechanical and Electrical Specification and Kitemarked.

2.Manhole covers must have a clear opening of 600mm and shall be Class D400 to BS EN 124 with 150mm deep frames in highways.

3.Filled ground must be filled and consolidated under the supervision and to the satisfaction of Yorkshire Water before any sewer works are carried out.

4. Yorkshire Water are not obliged to accept filter drain/land drainage runoff into the public sewer network or adoptable drainage system (directly or indirectly.) An alternative method of disposal of land drainage runoff will therefore be required. Please consult with the Local Authority/Land drainage Section.

5. The adoptable sewers should be a minimum of 1m and manholes 0.5m from kerb faces and service margins.

6. Sewers must have 5 metres clearance from trees and hedges or the width of canopy at mature height.

7. Sewers to be laid in Class "S" bedding (150mm granular bed & surround.) Where depth of cover to the top of the sewer is less than 1.2m in Highway and verges (or less than 900mm in non vehicular areas) then a concrete slab should be provided above the granular bed and surround.

8. Bedding and backfill material to conform to the requirements of Water Industry Specification 4-08-02 (Table A2)

9. Yorkshire Water policy is that Type "C" brick manholes and 1050mm dia manhole rings are not preferred. Instead it is preferred that you use a Type "B" manhole with 1200mm dia or 1500mm dia rings with the opening sited over the channel where depth of cover to pipe soffit is 1.0-1.5m

10. Adoptable plastic sewer pipes to be BSI Kitemarked (certified to WIS 4-35-01 and BS/EN13476). Adoptable plastic sewer pipes to be laid in maximum 3 metre lengths unless there is a specific operational need to lay longer lengths. Plastic channel sections in manholes are not acceptable. Yorkshire Water require clay channels in manholes.

11. The minimum crushing strength for clay pipes should be as follows: 100mm dia. 40KN/m, 150mm dia. 40KN/m, 225mm dia. 45KN/m, 300mm dia. 72KN/m. The minimum crushing strength for concrete pipes should be - (Class 120 to EN 1916/BS5911-1 2002).
Plastic pipes should conform to WIS 4-35-01 and BS EN13476

12. Where a B125 cover and frame has been approved, this must not be coated in plastic and must have lifting eyes suitably sized to accommodate standard lifting keys. Screw down covers are not acceptable.

13. There must be enough clearance at crossovers to accommodate bedding to both pipes (approx 300mm): If crossover is near the rocker then the clearance needed may need to be increased.

Rev	Details	Date	Drwn.	Chk.

Newett Homes

Yew Tree Road
Birchencliffe, Huddersfield

Longitudinal Sections
Sheet 1

Dwg No. : STE/25/03/11/01

Date : 20-3-25

Scale : H-1:500, V-1:100

Copyright © Shaun Tonge Engineering

SHAUN TONGE
ENGINEERING
11 Broomhead Road. Wombwell. Barnsley. S73 0SA.
Mobile 07528 278070 . Email Shauntongeengineering@yahoo.co.uk

A1