LANDSCAPE AND ECOLOGICAL MANAGAMENT PLAN

at
Castle Hill
Huddersfield
HD4 6TA

Client:
Castle Hill Hotel Heritage Limited

Client Address:
23 Hawkroyd Bank
Netherton
HD4 7JP

JCA Ref:
21112a/AWe

Date of Report:
28/08/2023

Revised:
16/12/2024

JCA Limited
Arboricultural & Ecological Consultants

Quality Assurance

Version	**Site Surveyed:**		**Report Completed:**		**Checked:**	
	Date	Name	Date	Name	Date	Name
Planning Application	13/07/23	Adam West	28/08/23	Adam West	28/08/23	James Foster
Revised management schedule			16/12/24	Adam West		

This report has been prepared and provided in accordance with the *British Standard 42020: Biodiversity – Code of practice for planning and development* and the *CIEEM's Code of Professional Conduct.*

Risk Assessment Completed	
Bio-security Procedure Completed	
Lone Worker Procedure Completed	

Contents

Quality Assurance 2
Contents 3
1 Introduction 4
2 Local Biodiversity Action Plan 6
3 Ecological Background & Constraints 7
4 Habitat Retention and Enhancement 10
5 Habitat Creation 11
6 Faunal Boxes 14
7 Management and monitoring 20
8 References 1
Appendix 1: Proposed Development Plan 3
Appendix 2: Baseline UKHAB 1
Appendix 3: Planting and Faunal Box Plan 1
Appendix 4: Examples Artificial Bat Box Designs 1
Appendix 5: Examples Artificial Bird Box Designs 2
Appendix 6: Examples of Insect Shelter Designs 3
Appendix 7: Example of Hedgehog Shelter Design 4
Appendix 8: Author Qualifications 5

© JCA Limited 2024

1 Introduction

1.1 Purpose of the Report

1.1.1 JCA Ltd. have been instructed by **Castle Hill Hotel Heritage Limited** to produce a Landscape and Ecological Management Plan (LEMP) in association with the planning application proposed for **Castle Hill, Huddersfield, HD4 6TA** (hereafter referred to as the 'Proposed Development).

1.1.2 This report will include the following:

a. Description and evaluation of features to be managed.

b. Ecological trends and constraints on site that might influence management.

c. Aims and objectives of management.

d. Appropriate management options for achieving aims and objectives.

e. Prescriptions for management actions.

f. Preparation of a work schedule (including an annual work plan capable of being rolled forward over a five-year period).

g. Details of the body or organization responsible for implementation of the plan.

h. Ongoing monitoring and remedial measures.

1.1.3 This report will ultimately aim to enhance the site's value to wildlife through the retention of any existing ecological features, the creation of new habitats and the provision of new roosting/nesting opportunities within the Proposed Development.

1.2 Terms of Reference

1.2.1 We The principal source documents used to inform this LEMP include:

Ecological Reports:

- Updated Ecological Impact Assessment (Quants environmental, July 2019);
- Biodiversity Accounting Assessment & Report (JCA Ltd, 2023);

© JCA Limited 2024

Plans:

- Site Plan including Access Road Plan (Dwg No; 3287 (SK) 104 (ONE 17, October 2022)).

1.3 Scope of the Report

1.3.1 This report is compiled in accordance with guidance outlined in the *National Planning Policy Framework* (NPPF) so that the development takes into account the value of ecosystem services and enhance ecological networks.

1.3.2 Section 15 of the NPPF and Policy LP30: Biodiversity and Geodiversity of the Kirklees Local Plan 2013 - 2031 (Kirklees Council, n.d), adopted February 2019 apply to the Proposed Development.

1.4 Details of Proposed Development

1.4.1 The scheme is for the construction of a hotel, restaurant/cafe, servicing facilities, associated car park and soft landscaping (See **Appendix 1**).

1.5 Site Description

1.5.1 This Site is centred at Ordnance Survey ('OS') grid reference **SE 1522 1405**, 2.5 km south-southeast of Huddersfield town centre. The Site covers an area of approximately 0.51 hectares ('ha') and comprises modified grassland, artificial sealed and unsealed surfaces. The Site's immediate habitats consist of grassland and scattered scrub.

1.5.2 Much of the wider landscape is made up of agricultural land (with boundary treelines/hedgerows). A large woodland block is present 0.5 km northeast of the Site, with further woodland adjacent along Lumb Beck 0.5 km to the south. Please see **Appendix 2** for a detailed map of existing habitats.

© JCA Limited 2024

2 Local Biodiversity Action Plan

2.1.1 JCA Ltd aim to incorporate Local Biodiversity Action Plan (LBAP) habitats within our management plans. We also aim to attract and support LBAP species, through either directly planting LBAP floral species, or creating habitats that will attract these species. The LBAP that covers **Castle Hill** is the Kirklees Council BAP

2.1.2 The habitats listed within the Kirklees Council BAP can be seen below in **Table 1.**

Table 1: Habitats listed under Kirklees Council BAP.

LBAP Habitats	
Scrub	Other semi-natural grassland (wet/rush pasture and rough grassland)
Riverine	

2.1.3 The species listed within the Kirklees Council BAP can be seen below in **Table 2.**

Table 2: Species listed under Kirklees Council BAP.

LBAP Species	
Watervole *Arvicola amphibius*	Marsh helleborine *Epipactis palustris*
Twite *Carduelis flavirostris subsp. bensonorum/pipilans*	Northern wood ant (*Formica lugubris*);
White-clawed crayfish *Austropotamobius pallipes*	Great crested newts *Triturus cristatus*
Early marsh orchid *Dactylorhiza incarnate*	Floating water plantain *Luronium natans*

© JCA Limited 2024

3 Ecological Background & Constraints

3.1 Habitats

3.1.1 For a comprehensive description of the site's current ecological value please see the Updated Ecological Impact Assessment (Quants environmental., July 2019). A summary of the habitats and features present in this report can be seen below.

3.1.2 As listed below, the site consists of three different habitats (as per UK Habitat Classification, Habitat Definitions Version 1.1, UKHab (2020)):

- Modified grassland;
- Developed land; sealed surface; and
- Artificial unvegetated, unsealed surface.

3.1.3 The site is generally void of any vegetation of ecological importance, with the only natural habitat present onsite being that of modified grassland.

3.1.4 The site currently consists of a sealed and unsealed carpark area surrounded by closely mowed modified grassland.

3.1.5 Currently, the habitats/areas immediately surrounding the site consists of further expansions of modified grassland, around much of the site's boundary. An area of scrub consisting of hawthorn *Crataegus monogyna* is present to the southern side of the site's access road. Whilst this habitat may provide nesting opportunities for bird species locally, it is anticipated that this habitat's value to nesting birds will be limited due to the lack of floral diversity and existing disturbance levels present via human presence and traffic along the access road. As such, it is not anticipated that the Proposed Development would have a detrimental impact on any notable habitats.

3.1.6 None of the remaining habitats or features on-Site or in immediate vicinity were deemed suitable for supporting rare or protected mammals, amphibians, reptiles, plants or invertebrates.

3.1.7 The Updated Ecological Impact Assessment (Quants environmental., July 2019) details that the Proposed Development may have a detrimental impact upon several designated conservation sites for which the site sits within the boundaries of these conservation sites. The designated conversation sites that may be potentially impacted by the Proposed Development consist of;

- Castle Hill Local Wildlife Site (LWS) and Local Nature Reserve (LNR); and

© JCA Limited 2024

- Kirklees Wildlife Habitat Network (KWHN).

3.1.8 Potential detrimental impacts on these conservation sites include land-take within Castle Hill LWS, LNR and KWHN, increased levels of disturbance via human activities, noise and/or lighting resulting in disturbance to protected sites and increased levels of dog fouling resulting in nutrient input into existing grassland habitats.

3.1.9 It has been deemed that through sufficient mitigation measures to be adopted during both the construction and operational phase of the Proposed Development, that the Proposed Development will have no direct or indirect adverse effects on Castle Hill LWS, LNR and KWHN. Please see Updated Ecological Impact Assessment (Quants environmental., July 2019) for the detailed evaluation and potential for impacts, and the associated proposed mitigation measures.

© JCA Limited 2024

3.2 Protected and/or Notable Species

3.2.1 The site contains habitats of low conservation value, with no features deemed likely to support protected species.

3.2.2 The offsite scrub (south of the site's access road) may support protected species.

3.2.3 Following the site's ecological survey as part of the Updated Ecological Impact Assessment (Quants environmental., July 2019) and updated site survey by Adam West (Principal Ecologist, JCA Ltd) in July 2023, the modified grassland, developed land/sealed surface and artificial unvegetated unsealed surface habitats were considered to contain habitats of low ecological value. The aforementioned habitats have the potential to support the following protected and/or notable species:

- **Birds -** The offsite scrub (hawthorn) may provide limited opportunities for foraging and nesting birds.

.

© JCA Limited 2024

4 Habitat Retention and Enhancement

4.1.1 The Proposed Development will see 0.29 ha of the site's overall 0.51 ha of habitats removed to facilitate the Proposed Development. The remaining 0.22 ha will see the retention of the site's access road and the enhancement of the existing grassland habitats (where feasible), with the grassland habitat considered the most ecological important habitat present onsite.

4.1.2 As the site mostly contains habitats of low conservation value only, there is the scope to greatly enhance the site's wildlife value post development.

4.1.3 The existing modified grassland on-site, is to be enhanced to other neutral grassland to increase its floral diversity, and therefore its ability to support a more complex invertebrate assemblage within this habitat.

© JCA Limited 2024

5 Habitat Creation

5.1 Summary

5.1.1. The Site Plan including Access Road Plan (Dwg No; 3287 (SK) 104 (ONE 17, October 2022)) indicates that the Proposed Development will see the Site's value to wildlife and biodiversity increased through a combination of the following:

- Creation of modified grassland (moderate condition level) to increase floral diversity of the site's current limited grassland species present onsite.

5.1.2. The Proposed Development will also see the inclusion of faunal provisions within the proposed building and grassland habitats to support a range of species including several bat, bird and invertebrate species.

5.1.2 The proposed Planting and Faunal Box Plan can be seen in **Appendix 3**.

5.2 Grassland Planting

5.3.1 The Proposed Development plans include areas of species-rich grassland that may be achieved either by the enhancement of the existing modified grassland in these areas, or via the establishment of species-rich grasslands.

5.1.1 Species-rich grasslands require much less management than amenity grassland as they only require mowing twice a year, which will save a considerable amount of funds in the long term. In addition, species-rich grassland are of a greater ecological value than the amenity grassland (modified grassland) currently present on-Site.

5.1.2 Species Selection: The species chosen for this grassland are all nectar and pollen rich, and so will attract insects such as bees and butterflies. The grasses are visually attractive and many are the host plant of butterfly species. It is hoped that the insects that are attracted to the site will then provide a food source for larger animals, thus encouraging species such as bats and birds to the site.

5.1.3 Species Specifications: A list of the recommended species can be seen below in **Table 3**.

© JCA Limited 2024

Table 3: List of species-rich grassland mix.

Flowering Plants			Grasses		
Botanical Name	**Common Name**	**%**	**Botanical Name**	**Common Name**	**%**
Achillea millefolium	Yarrow	0.4	*Agrostis capillaris*	Common Bent	10
Centaurea nigra	Common Knapweed	0.5	*Anthoxanthum odoratum*	Sweet Vernal-grass (w)	1
Centaurea scabiosa	Greater Knapweed	1.5	*Cynosurus cristatus*	Crested Dogstail	32
Daucus carota	Wild Carrot	1	*Festuca ovina*	Sheep's Fescue (w)	10
Echium vulgare	Viper's Bugloss	1.2	*Festuca rubra*	Slender-creeping Red-fescue	20
Eupatorium cannabinum	Hemp Agrimony	0.1	*Phleum bertolonii*	Smaller Cat's-tail (w)	6
Galium verum	Lady's Bedstraw	1.2	*Trisetum flavescens*	Yellow Oat-grass (w)	1
Knautia arvensis	Field Scabious	1.5		**Total**	**80**
Leontodon hispidus	Rough Hawkbit	0.4			
Leucanthemum vulgare	Oxeye Daisy	1			
Lotus corniculatus	Birdsfoot Trefoil	1			
Malva moschata	Musk Mallow	0.5			
Origanum vulgare	Wild Marjoram	0.1			
Primula veris	Cowslip	0.5			
Prunella vulgaris	Selfheal	2			
Pulicaria dysenterica	Common Fleabane	0.1			
Ranunculus acris	Meadow Buttercup	1.6			
Reseda lutea	Wild Mignonette	0.4			
Rhinanthus minor	Yellow Rattle	1.5			
Silene dioica	Red Campion	1			
Silene vulgaris	Bladder Campion	1			
Trifolium pratense	Wild Red Clover	0.5			
Vicia cracca	Tufted Vetch	1			
	Total	**20**			

5.3.2 Planting Implementation: The key to creating sustainable, species-rich grasslands is to begin with a nutrient-poor base and then manage the land correctly.

5.3.3 It is recommended that the grassland planting is implemented after the completion of the development.

- **Ground Preparation**:
  Bare soil: If the area of ground to be converted into species-rich grassland is bare, then the following instructions should be implemented: At most sites, it is likely that the soil will have at one point been fertilised. To reduce fertility, remove the top 15 to 20 cm of topsoil to reveal the nutrient-poor subsoil. The nutrient rich topsoil should then be relocated elsewhere on site, i.e. in the

© JCA Limited 2024

garden spaces and shrub beds. Alternatively, a layer of the unearthed subsoil can be excavated and placed over the topsoil. This method will inhibit the growth of any weeds present in the topsoil. Another option is to dilute the topsoil by mixing in poor quality material such as crushed builders' rubble or spoil. Then, using a fork, break up the soil and rake the proposed seedbed to produce a fine, firm tilth. Remove any large stones and any root fragments.

5.3.4 Existing Grassland: As areas of ground is to be enhanced into species-rich grassland, then the following instructions should be implemented: During the autumn (September / October) cut the grass very short and rake the land over vigorously to create patches of bare ground. When the lawn is cut, the cuttings must be removed from the site to prevent the nutrients being returned.

- **Sowing**: The seed mix should be sown during early autumn (late August/ September). The seeds should be sown sparsely, at a rate of 2 to 5 grams per square metre. Mix the seed with damp sand or sawdust in a ratio of 1 to 3 in order to ensure the seeds are evenly distributed across the seedbed. Scatter the seed by hand, gently rake over and then lightly roll or tread the ground to settle the seeds in the soil.

- **Management**: Following sowing, remove any annual and perennial weeds that appear. The grassland should remain nutrient poor, therefore do **not** add fertilisers at any point. The grassland should be cut only twice a year; once in the spring (between early March and early April) and once in the autumn (between late June and the end of August). Always remove the cuttings to prevent nutrients returning to the soil. **Never** cut the meadow shorter than 5cm. This cutting regime will prevent the grassland from succeeding in to scrub and woodland, whilst allowing the flowers to set seed for the following year, thus producing a sustainable and viable habitat. If after 2 years the grassland remains species poor, the land should be prepared in the method described above in *Existing Grassland* and the seed mix re-sown.

- If any planting is removed, dies or becomes diseased or damaged within the first thirty years from completion, the planting shall be replaced in the first available planting season with a specimen, or specimens, of the same species and size as the original planting.

© JCA Limited 2024

6 Faunal Boxes

6.1 Faunal Boxes Overview

6.1.1 In total **2** bat bricks on the building, **6** bird boxes on the building, **2** hedgehog shelters and **2** insect boxes have been recommended. The location of each faunal box to be erected can be seen in **Appendix 3.**

6.2 Bat Roosting Provisions

6.2.1 All UK bat species are protected by UK legislation. This is in response to the declines experienced by many bat species over the past century. The cause of the decline can be linked to a number of factors, including habitat loss, pesticide over-use, habitat fragmentation, loss of roost sites and roost disturbance.

6.2.2 The desktop study and site survey conducted as part of the site's Updated Ecological Impact Assessment (Quants environmental., July 2019) identified that the site is currently not suitable for roosting, foraging and commuting bat species. However, post development will see foraging opportunities for bat species locally created via an anticipated increase in invertebrate numbers within the newly enhanced/created grassland habitats.

6.2.3 As such, the types of bat boxes recommended for the Proposed Development will provide roosting opportunities focusing on pipistrelle species *Pipistrellus sp*, with pipistrelle species being the most abundant bat species in the local area (within 2 km of the site).

6.2.4 <u>Box Selection & Positioning</u>: The number and specification of the recommended bat boxes are detailed in **Table 4** below, and their locations shown in **Appendix 3.**

6.2.5 Should the bat roosting provisions included within this report not be suitable, there is a wide range of options available to pursue. For example, other roost opportunities include cutting slots into soffit boxes, using bat bricks that lead into cavity walls and using lifted tiles to allow bats access into the loft. Should this be the case, an ecologist should be contacted as soon as possible in the planning process to ensure provisions for roosting bats remain as part of the Proposed Development.

© JCA Limited 2024

Table 4: Bat roosting opportunities to be installed as part of the proposed development.

Bat Brick/Box	Number to be Installed	Description	Details
Vivara Pro Build-in Woodstone Bat Tube (or a comparable design)	2	Designed to be built into the masonry of external walls or beneath a rendered surface, the Vivara Pro Woodstone Bat Tube provides an unintrusive, tailored habitat for a variety of bat species. It is designed to provide the maximum internal space across two cavities, allowing space for larger groups. The cavities can be reached via the crawl-in entry slot in the front facing. The positioning of the boxes must be at a height no less than 2m from ground level.	<u>Dimensions</u> Height: 500mm Width: 210mm Depth: 77mm Weight: 6kg

6.2.6 **Bat boxes** on buildings have been selected to be incorporated into the proposed building existing building. The boxes should be positioned high on the walls of the building. Bat boxes should be placed under the eaves at the apex of the south facing walls.

6.3 Bird Boxes

6.3.1 In the UK there are approximately 600 species of birds. Many birds regularly visit gardens and will quickly adopt to new nest boxes, but only when the right box design is selected and situated correctly. Each species prefers a specific nest box design, with different dimensions and hole sizes.

6.3.2 The desktop study conducted as part of the site's Updated Ecological Impact Assessment (Quants environmental., July 2019) identified that several bird species are present within 2 km of the Site boundary, including house martin *Delichon urbicum*, swift *Apus apus* and swallow *Hirundo rustica*. Swift is also listed as a Schedule 1 bird species. Therefore, the bird boxes recommended for

© JCA Limited 2024

the Proposed Development will provide nesting opportunities for these species.

6.3.3 The specifications of all bird boxes to be installed on site post-development are detailed below in **Table 5** below, and locations shown in **Appendix 3.**

Table 5: Bird nesting opportunities to be installed as part of the proposed development.

Bird Box	Number to be Installed	Description	Details
WoodStone Swift Nest Box 	2	The FSC certified WoodStone Swift Nest Box is constructed entirely out of WoodStone meaning it is long lasting and won't rot away like a traditional wooden nest box There is an opening at the back of the box for easy cleaning with the nest entrance on the underside of the box. This type of entrance is preferred by swifts but discourages house sparrows and starlings from occupying the box. This box should be installed at least five metres above the ground, ensuring that there is unobstructed access for birds entering and leaving. If possible, boxes should be sited under the shelter of eaves or overhanging roofs, and at at a height no less than 3m from ground level.	Cost £34.99 Dimensions Height: 245mm Width: 380mm Depth: 265mm Weight: 6kg
Vivara Pro WoodStone House Martin Nest, Double Nest (or comparable design) 	2	These WoodStone house martin nests have been specially designed to appeal to house martins and are constructed from WoodStone, a mixture of wood fibres and concrete that is durable and provides great thermal properties for the growing nestlings. The backing to the nests is also WoodStone, making them very durable. These nests should be sited underneath the eaves on exterior walls of your house or outbuildings, at a minimum height of 2m above the ground.	Dimensions Height: 120mm Width: 380mm Depth: 150mm Weight: 3.6kg
Eco Swallow Nest (or comparable design)	2	Swallows will readily adopt these nest cups which are based on the size and shape of natural swallow nests. The nest cup is easy to fix to your	Dimensions Height: 150mm

© JCA Limited 2024

		wall; it slots over two screws with a third hole at the base for securing it in place. Removal for cleaning after the breeding season is also easy, simply undo the screw at the base and lift off. Swallows are sociable birds, but the nest cups should not be placed too close together. A minimum distance of 1m between nest cups is recommended. To ensure the swallows have sufficient room in the nest cup and when arriving and leaving there should be at least 6cm free space above the nest cup. When choosing a suitable spot for the nest it is essential that birds have constant access throughout the breeding season.	Width: 270mm Depth: 90mm Weight: 0.9kg

6.3.4 Bird boxes on buildings should be securely fastened below the eaves, at least 4m above ground level (to prevent predation by cats). Boxes should be positioned so that the front is facing in an easterly direction, as to avoid direct heat of the sun and prevailing wind and rain.

6.3.5 The installation of all bird boxes is to be undertaken immediately after the completion of the proposed development.

6.4 Invertebrate Provisions

6.4.1 Insects are the primary food source for many rare and/or protected animals that regularly visit gardens. Therefore, encouraging insects into a site will then attract their rare and/or protected predators.

6.4.2 Many insect species will hibernate over winter, including butterflies, ladybirds and lacewings; of which hibernate in leaf litter or other plant debris. However, residents tend to over-maintain their gardens, often tidying these features away in the autumn. Therefore, these species can be encouraged to stay at the site all year round by erecting suitably designed towers, boxes and/or log piles (Kirby, 2013).

6.4.3 To ensure the site maintains its value for invertebrates**, 1 insect tower** should be placed attached to a suitable fence or structure. A suitable insect tower design can be seen below in **Figure 1**, and its proposed location on site shown in **Appendix 3**.

© JCA Limited 2024

Figure 1: Insect Tower (can be created through own design).

6.5 Hedgehog Provisions

Hedgehog Access Holes

6.5.1 Hedgehog numbers have declined by 90% over the past 50 years due to several factors including habitat loss, fragmentation and parasites.

6.5.2 Access to natural habitats have become increasingly limited for hedgehogs, as fences and walls block their dispersal. A simple solution is to create a 13x13cm access hole at ground level into fences to allow hedgehogs to freely move between green spaces (Bunnell, 2014). As the majority of the Proposed Development's boundary lacks barriers to hedgehog dispersion, the inclusion of hedgehog holes are not required. If the Proposed Development changes to include an increase in boundary fencing and/or walls, hedgehog holes will be required to be installed within these features.

Hedgehog Shelters

6.5.3 Providing shelter for hedgehogs within green spaces will encourage this species

© JCA Limited 2024

to visit the site and utilise the natural space. Therefore, **1 hedgehog shelter** must be included post-construction, with its location shown in **Appendix 3**.

6.5.4 Hedgehog shelters are simple to construct and should be situated in a sheltered, undisturbed area preferably under vegetation with dried leaves or hay placed inside for bedding (Bunnell, 2014). An example of a hedgehog shelter is shown below in **Figure 2.**

Figure 2: Example of hedgehog shelter *in-situ.*

© JCA Limited 2024

7 Management and monitoring

7.1 Conclusion

7.1.1 Monitoring of faunal boxes and wildlife features over a 5-year period is recommended. Monitoring is key to understanding how habitat and wildlife features are being used by wildlife on site after the development. Without monitoring, and effective and adaptive management scheme cannot be maintained and revised.

7.1.2 A Schedule of Ecological Mitigation and Monitoring has been produced in **Tables 6.1-6.4** (shown below), this will cover the site from 2025-2055. Please note, the schedule is similar from Years 1-30 as the majority of the recommended ecological measures commence once construction works have finished.

7.1.3 This Schedule should be treated as a working document and amended as appropriate to meet work activities on the ground.

7.1.4 The developer, **Castle Hill Hotel Heritage Limited**, are responsible for ensuring implementation of the plan by finding and appointing a specialist ecological management body or organisation who will carry this out.

7.1.5 A combination of a suitably qualified ecologist (SQE) and the Grounds Maintenance team will be conducting the ecological monitoring checks. Should it become apparent that any of the ecological provisions are not succeeding in their role to maintain the sites' biodiversity, both the client and SQE will liaise as to ensure that any concerns are addressed.

7.1.6 The schedule of ecological monitoring needs to be reviewed every five years and, if amendments are required to these procedures, these must be first agreed with the local planning authority and county ecologist before being implemented. If the original company carrying out the landscaping procedures changes then the new landscaping company must take the responsibility to follow the ecological monitoring procedures listed in this report.

© JCA Limited 2024

Table 6 Schedule of Ecological monitoring onsite from years 1 to 30.

Key:

	Appropriate time to conduct deliverable
	Unadvised time to conduct deliverable

TABLE 6.1) SCHEDULE OF ECOLOGICAL MITIGATION MEASURES – YEAR 1												
Deliverable	**TIME OF YEAR**											
	Jan	Feb	March	April	May	June	July	Aug	Sept	Oct	Nov	Dec
Installation of bat boxes on the building. If not installed in previous years.												
Installation of bird boxes on the building. If not installed in previous years.												
Install hedgehog shelters and invertebrate boxes. If not installed in previous years.												
Prepare areas of existing grassland ahead of meadow/wildflower planting												

TABLE 6.2) SCHEDULE OF ECOLOGICAL MONITORING – YEAR 2												
DELIVERABLE	**TIME OF YEAR**											
	Jan	Feb	March	April	May	June	July	Aug	Sept	Oct	Nov	Dec
Sew meadow/wildflower planting												

© JCA Limited 2024

TABLE 6.3) SCHEDULE OF ECOLOGICAL MONITORING – YEARS 3-10												
DELIVERABLE	**TIME OF YEAR**											
	Jan	Feb	March	April	May	June	July	Aug	Sept	Oct	Nov	Dec
Monitoring of bat boxes (including repairs and cleaning, where necessary)												
Monitoring of bird boxes (including repairs and cleaning, where necessary).	*	*										
Monitoring of wildflower planting												
Meadow/wildflower/grass cutting regime 2 times a year, cuttings removed												

***Must be conducted outside of the breeding bird season (i.e. between September- January)**

TABLE 6.4) SCHEDULE OF ECOLOGICAL MITIGATION MEASURES – YEARS 10-30												
DELIVERABLE	**TIME OF YEAR**											
	Jan	Feb	March	April	May	June	July	Aug	Sept	Oct	Nov	Dec
Monitoring of wildflower planting												
Meadow/wildflower/grass cutting regime 2 times a year, cuttings removed												

© JCA Limited 2024

8 References

Ausden, M. (2007) *Habitat management for conservation: A handbook of techniques*. Oxford, United Kingdom: Oxford University Press, USA.

Bat Mitigation Guidelines (Jan. 2004). A. J. Mittchell-Jones. English Nature.

Bat Survey Guidelines: Good Practice Guidelines (2007). Bat Conservation Trust (BCT).

Bat Workers Manual (3rd Edition 2004). A. J. Mitchell-Jones & A. P. McLeish. Joint Nature Conservation Committee (JNCC).

Bunnell, T. (2014) *The disappearing Hedgehog*. United Kingdom: Independent Publishing Network.

Collins, R., Schaafsma, M. and Hudson, M.D., 2017. The value of green walls to urban biodiversity. *Land Use Policy*, *64*, pp.114-123.

Kirby, P. (2013) *Habitat management for invertebrates: A practical handbook*. Exeter: Pelagic Publishing.

Madre, F., Vergnes, A., Machon, N. and Clergeau, P., 2014. Green roofs as habitats for wild plant species in urban landscapes: first insights from a large-scale sampling. *Landscape and urban Planning*, *122*, pp.100-107.

Perrow, M.R. (2008) *Handbook of ecological restoration: Volume 1, principles of restoration: V. 1: Principles of restoration*. Edited by Martin R. Perrow and Anthony J. Davy. Cambridge, United Kingdom: Cambridge University Press.

Websites:

Bat Conservation Trust (BCT). <http://www.bats.org.uk/>

Google Maps. **<**http://maps.google.co.uk/**>**

Kirklees Council (no date) Kirklees Biodiversity Action Plan. Species Action Plan:
Floating Water Plantain – Luronium natans. [Online] Available at: https://www.kirklees.gov.uk/beta/delivering-services/pdf/floating-water-plantain-action-plan.pdf [Accessed 24th August 2023].

Kirklees Council (no date) Kirklees Biodiversity Action Plan. Species Action Plan:
Great-crested Newt - Triturus cristatus. [Online] Available at: https://www.kirklees.gov.uk/beta/delivering-services/pdf/great-crested-newt-action-plan.pdf [Accessed 24th August 2023].

Kirklees Council (no date) Kirklees Biodiversity Action Plan. Species Action Plan: Marsh Helleborine - Epipactis palustris ; Early Marsh Orchid – Dactylorhiza incarnate. [Online] Available at: www.kirklees.gov.uk/beta/delivering-services/pdf/marsh-helleborine-actionPlan.pdf [Accessed 3rd August 2023].

Kirklees Council (no date) Kirklees Biodiversity Action Plan. Species Action Plan: Northern Wood Ant - Formica lugubris. [Online] Available at: https://www.kirklees.gov.uk/beta/delivering-services/pdf/northern-wood-ant-actionPlan.pdf [Accessed 24th August 2023].

Kirklees Council (no date) Kirklees Biodiversity Action Plan. Species Action Plan: Twite – Carduelis flavirostris subsp. Bensonorum/pipilans. [Online] Available at: https://www.kirklees.gov.uk/beta/delivering-services/pdf/twite-action-plan.pdf [Accessed 24th August 2023].

Kirklees Council (no date) Kirklees Biodiversity Action Plan. Species Action Plan: Water vole - Arvicola terrestris. [Online] Available at: https://www.kirklees.gov.uk/beta/delivering-services/pdf/waterVole-actionPlan.pdf [Accessed 24th August 2023].

Kirklees Council (no date) Kirklees Biodiversity Action Plan. Species Action Plan: White-clawed Crayfish - Austropotamobius pallipes. [Online] Available at: https://www.kirklees.gov.uk/beta/delivering-services/pdf/white-clawed-crayfish-action-plan.pdf [Accessed 24th August 2023].

© JCA Limited 2024

Kirklees Council (no date) Kirklees Biodiversity Action Plan: Kirklees Species of Principal Importance. [Online] Available at: https://www.kirklees.gov.uk/beta/delivering-services/pdf/biodiversity-species.pdf [Accessed 24th August 2023].

Kirklees Council (2007) Kirklees Habitats of Principal Importance. [Online] Available at: https://www.kirklees.gov.uk/beta/delivering-services/pdf/biodiversity-habitats.pdf [Accessed 24th August 2023].

Kirklees Council (2019) Kirklees Local Plan - Kirklees Local Plan Strategy & Policies. Adopted 27 February 2019.

Kirklees Council (no date) The Kirklees Biodiversity Strategy. [Online] Available at: https://www.kirklees.gov.uk/beta/delivering-services/pdf/biodiversity-strategy.pdf [Accessed 3rd August 2023]..

Multiple-Agency Geographic Information for the Countryside (MAGIC). <http://www.magic.gov.uk/>

Natural England. < http://www.naturalengland.org.uk/>

Nature on the Map. Natural England. www.natureonthemap.org.uk

nhbs. (2020). *Bird Boxes.* Available: https://www.nhbs.com/4/bird-boxes?q=&fR[hide][0]=false&fR[live][0]=true&fR[shops.id][0]=4&hFR[subjects_equipment.lvl1][0]=Bird%20Boxes. Last accessed 24/08/2023.

UKHab (2018) The UKHab Classification System [Online]. https://ukhab.org/. [Last accessed: 25/08/2023

© JCA Limited 2024

Relevant Legislation:

Wildlife and Countryside Act 1981 <http://jncc.defra.gov.uk/page-3614>

Conservation (Natural Habitats, &c.) Regulations 1994 (The Habitats Directive) (Amended 2010) <http://www.legislation.gov.uk/uksi/2010/490/contents/made>

Countryside and Rights of Way Act 2000 <http://www.legislation.gov.uk/ukpga/2000/37/pdfs/ukpga_20000037_en.pdf?view=interweave>

© JCA Limited 2024

Appendices

© JCA Limited 2024

Appendix 1: Proposed Development Plan

© JCA Limited 2024

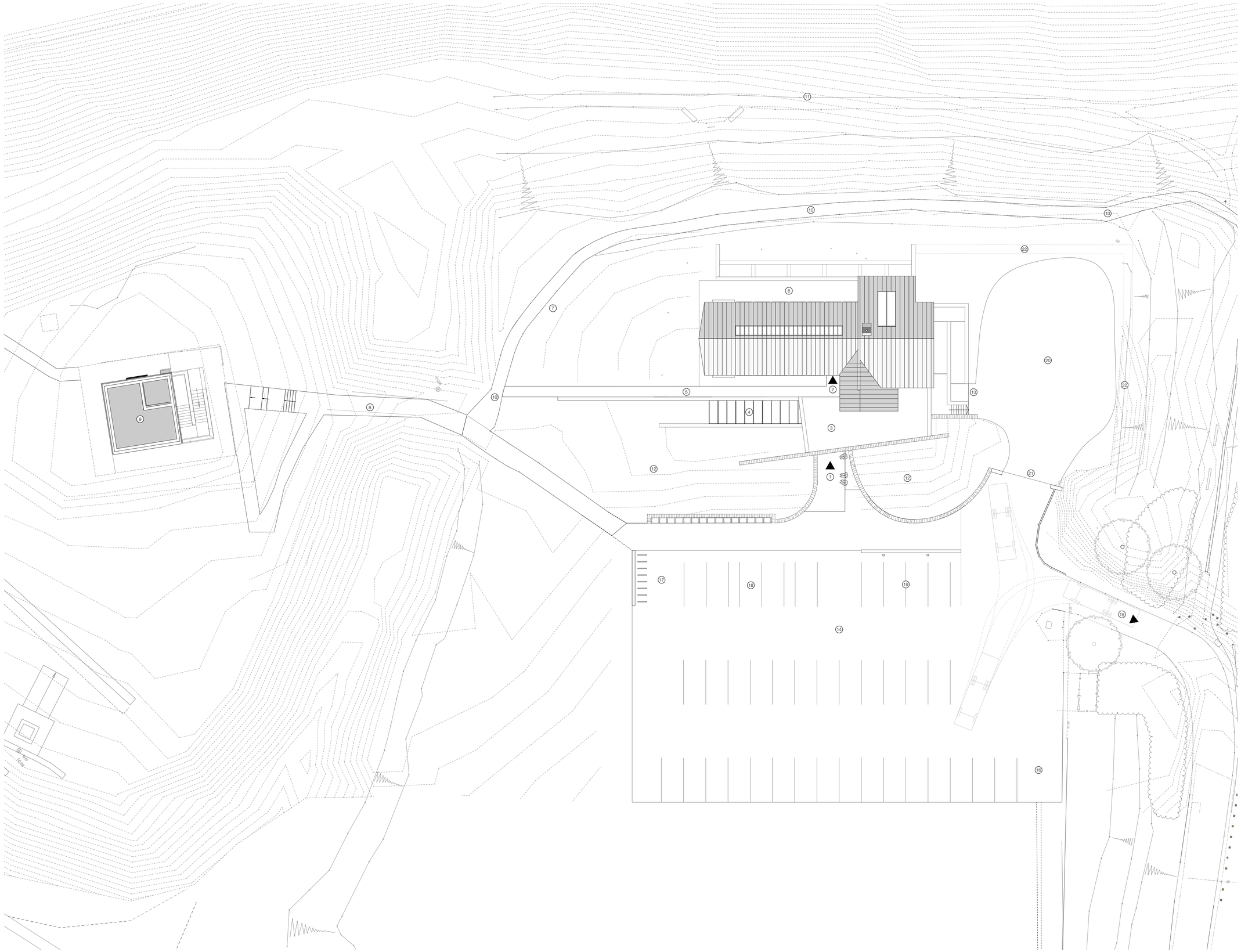

Proposed Site Plan 1:200

Notes

Do not scale from drawing, use figured dimensions only.

All dimensions must be checked and verified on site prior to commencement of work and architect to be notified of any discrepancies.

This drawing is intended to permit overall scheme proposals only and cannot be used for construction purposes without further information.

Rev.		Drawn	Checked	Date
A	General revisions	FWG		10.02.20
B	Entrance wall revised to allow for footpath 2m in width	FWG		27.10.20
C	Car park revised following comments from highways	FWG		27.10.20
D	Carpark and entrance revised in line with business plan	MJN		18.09.23
E	Carpark and Site Plan reverted to former Planning approval layout	MJN		26.03.25
F	Additional Notes added	MJN		28.03.25

KEY

1. Main Entrance
2. Secondary Entrance
3. Cafe Terrace
4. Roof Glazing Over Exhibition
5. Footpath
6. Viewing Terrace
7. Beacon
8. Footpath to Tower
9. Victoria Tower
10. Existing Upper Path
11. Existing Lower Path
12. Contoured Banking
13. Deliveries / Staff Entrance
14. Car Park (37 Spaces)
15. Exit to Castle Hill Side
16. Unobstructed access to carpark
17. Bike Storage
18. Accessible Parking Spaces
19. EV Charging Spaces
20. Delivery and Service Yard
21. Service Yard Gate
22. Gorse Hedge

N

Job Title
Castle Hill Visitor Centre, Huddersfield

Client
The Thandi Partnership

Status: Planning
Company: AD

Drawing: Proposed Site Plan
Scale @ A1: 1:200

Date: October 2019
Drawn: FWG
Checked:

Drawing No.: 3287 (0-) 05
Revision: F

ONE17
ARCHITECTS & INTERIOR DESIGNERS
The Dyehouse, Armitage Bridge
Huddersfield, West Yorkshire HD4 7PD
T 01484 668 000 F 01484 668 001
E solutions@one17design.com
ONE17DESIGN.COM

Appendix 2: Baseline UKHAB

© JCA Limited 2024

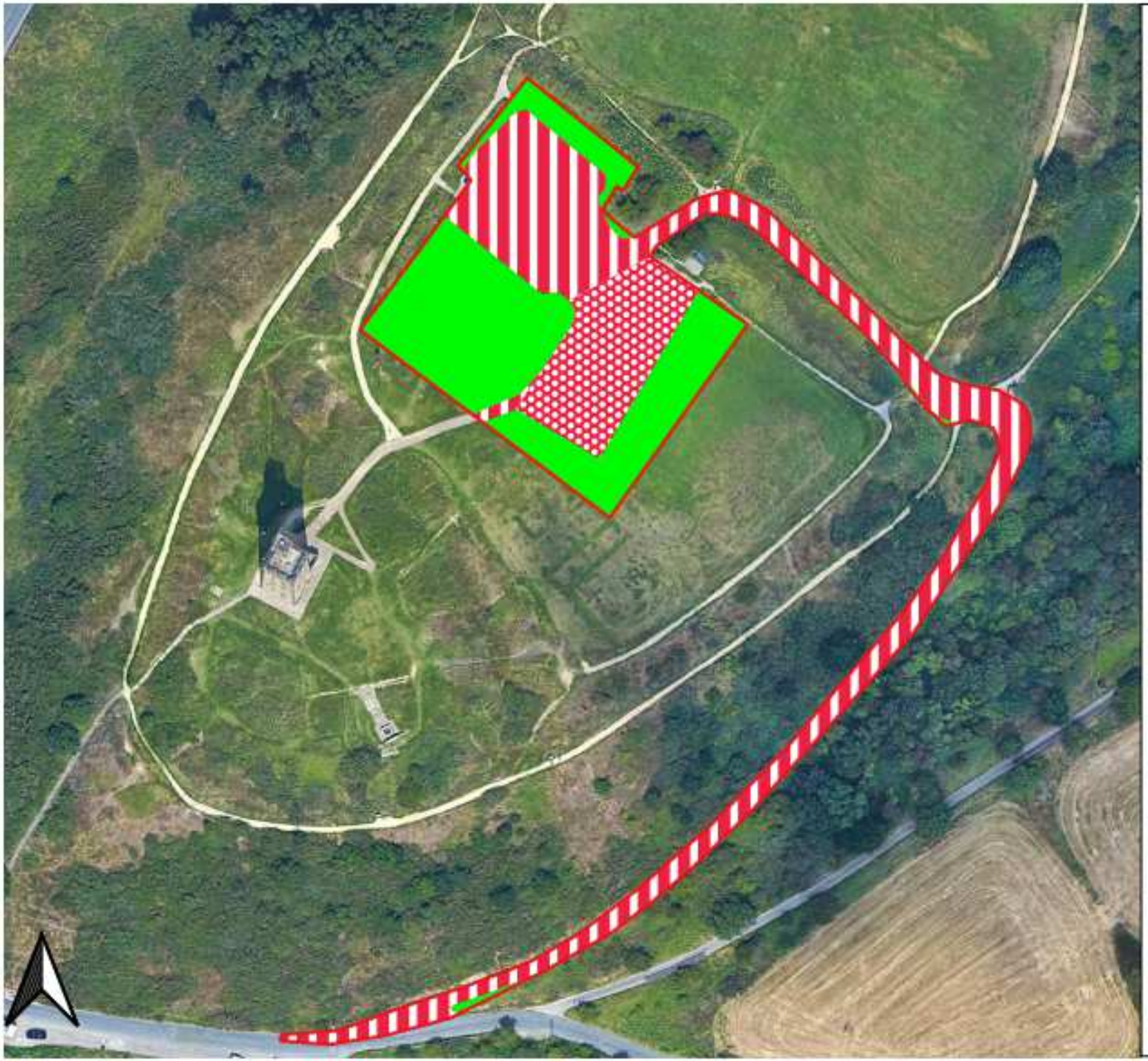

JCA LIMITED

Castle Hill, Huddersfield, HD4 6TA

Key

- Site Boundary
- g4 - Modified grassland
- u1b - Developed land; Sealed surface
- u1c - Artificial unvegetated, unsealed surface

0.1 0 0.1 0.2 0.3 km

Site: Castle Hill, Huddersfield, HD4 6TA	Client: The Thandi Partnership
Plan: UKHAB Map	Author: AWe
Plan ref: 01	Revision: 00

Contains Ordnance Survey data ©Crown copyright and database right 2023

Appendix 3: Planting and Faunal Box Plan

© JCA Limited 2024

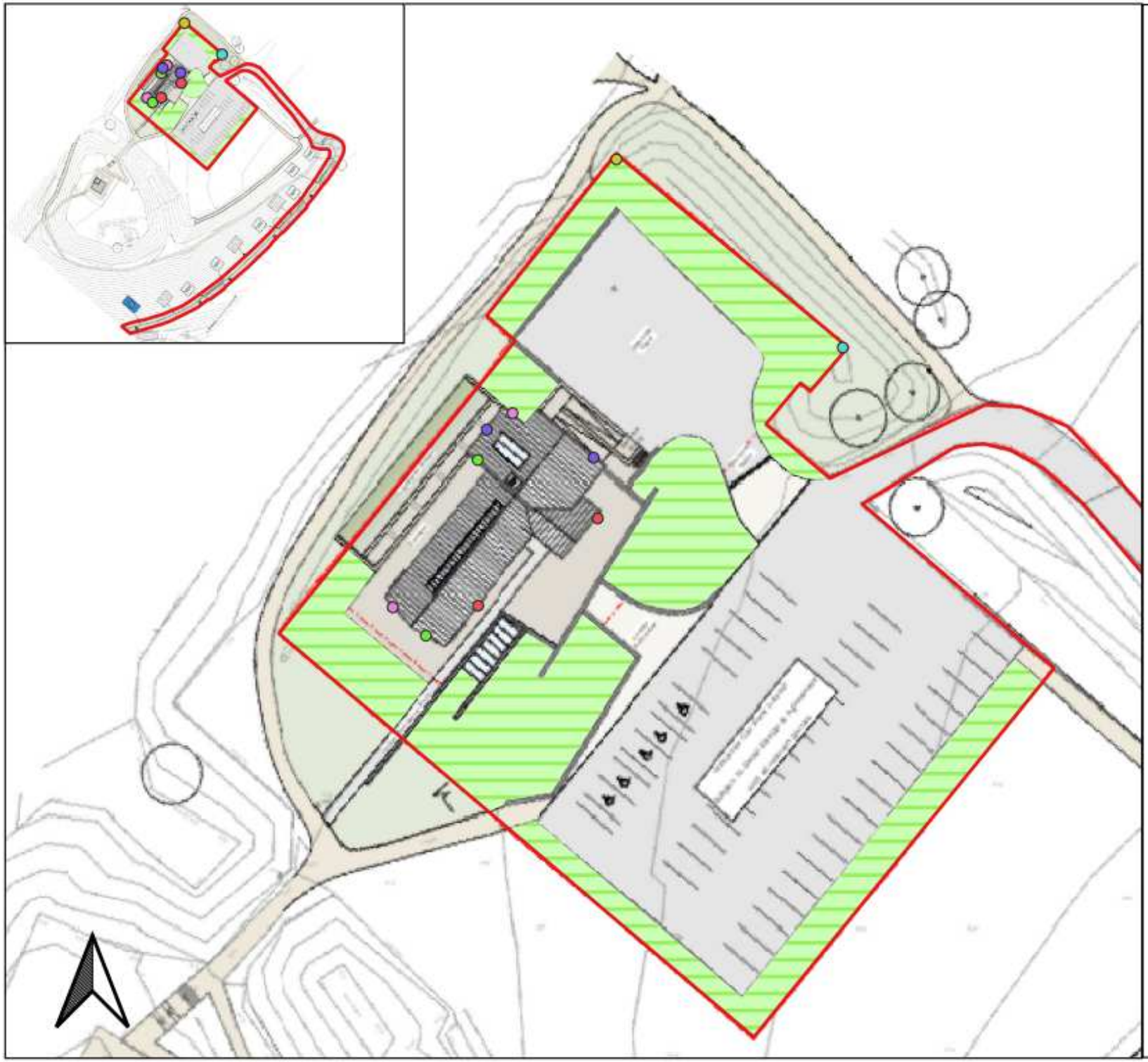

Castle Hill, Huddersfield, HD4 6TA

Key

- Site Boundary
- Other neutral grassland
- Vivara Pro Build-in WoodStone Bat Tube
- Eco Swallow Nest
- Hedgehog Shelter
- Invertebrate Tower
- Viara Pro WoodStone House Martin, Double Nest
- WoodStone Swift Nest Box

0 0.1 0.2 0.3 km

Site Castle Hill, Huddersfield, HD4 6TA	Client Castle Hill Hotel Heritage Limited
Plan Planting and Faunal Box Plan	Author AWe
Plan ref 01	Revision 00

Contains Ordnance Survey data ©Crown copyright and database right 2023

Appendix 4: Examples Artificial Bat Box Designs

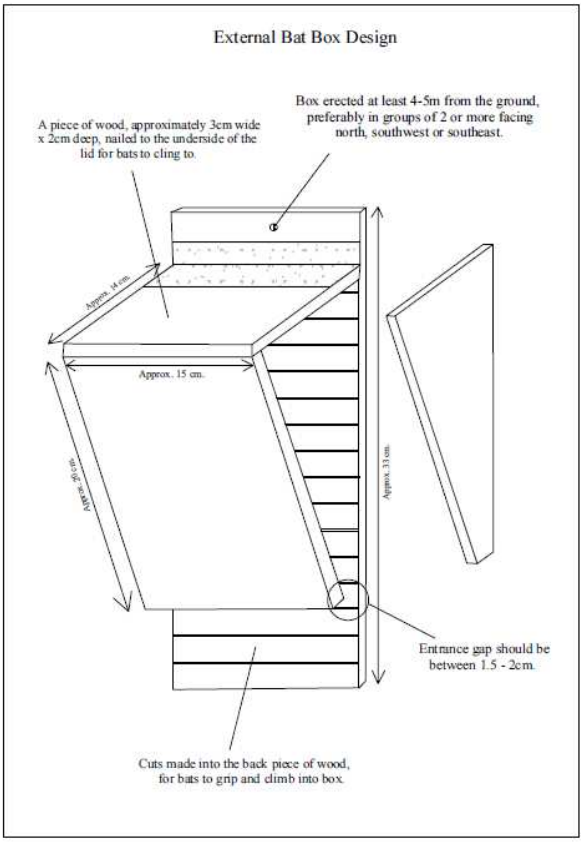

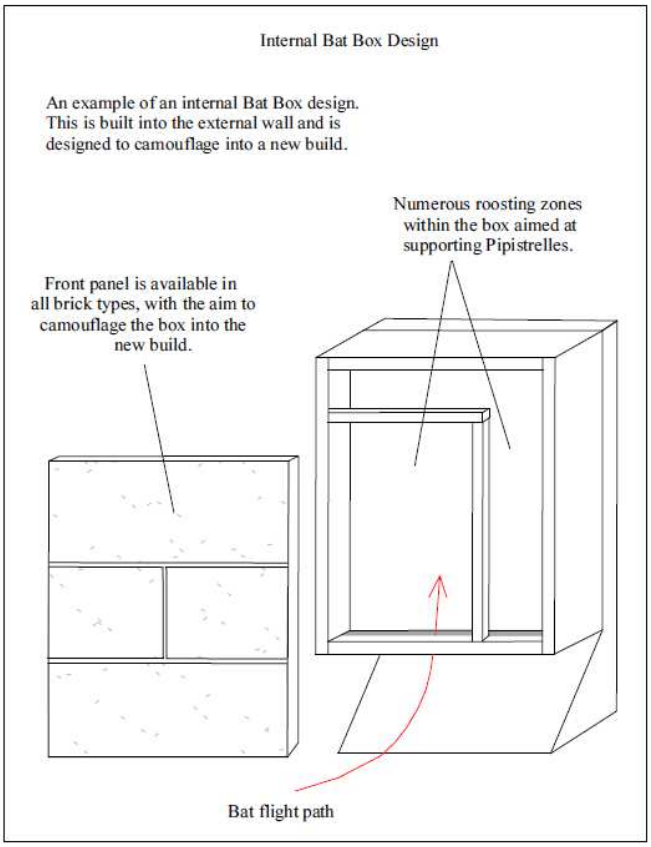

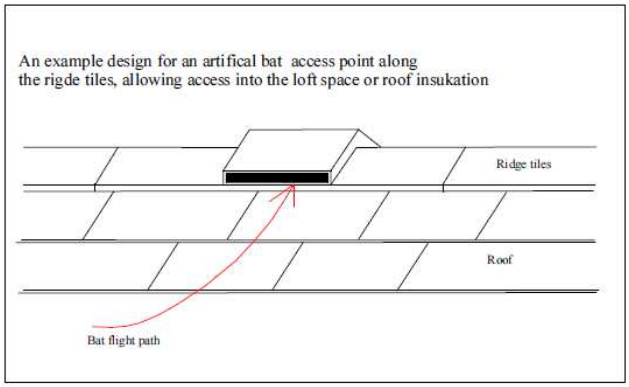

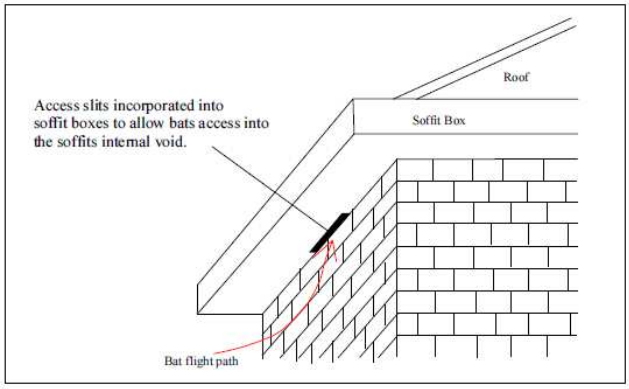

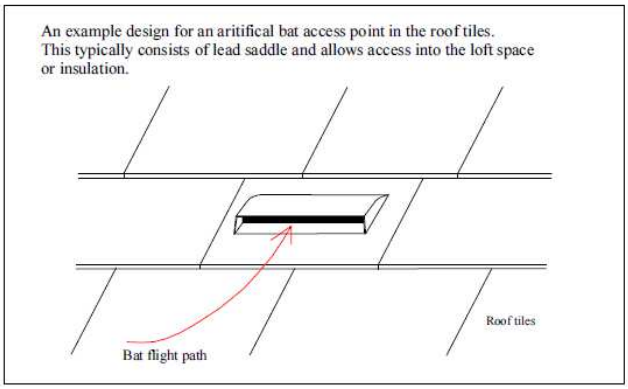

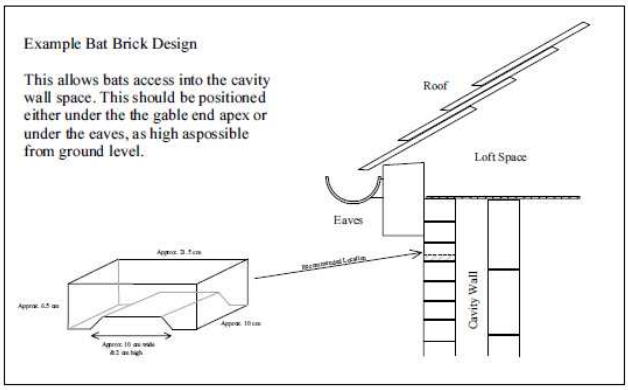

© JCA Limited 2024

Appendix 5: Examples Artificial Bird Box Designs

An example of two different bird box designs

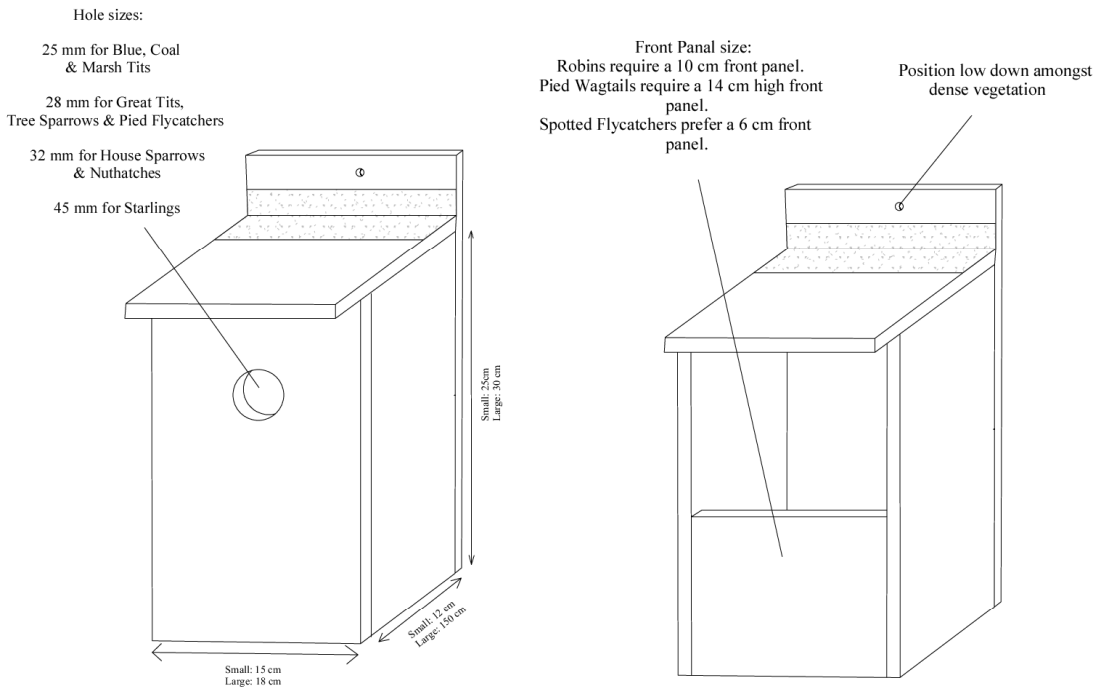

An example of a House sparrow box design

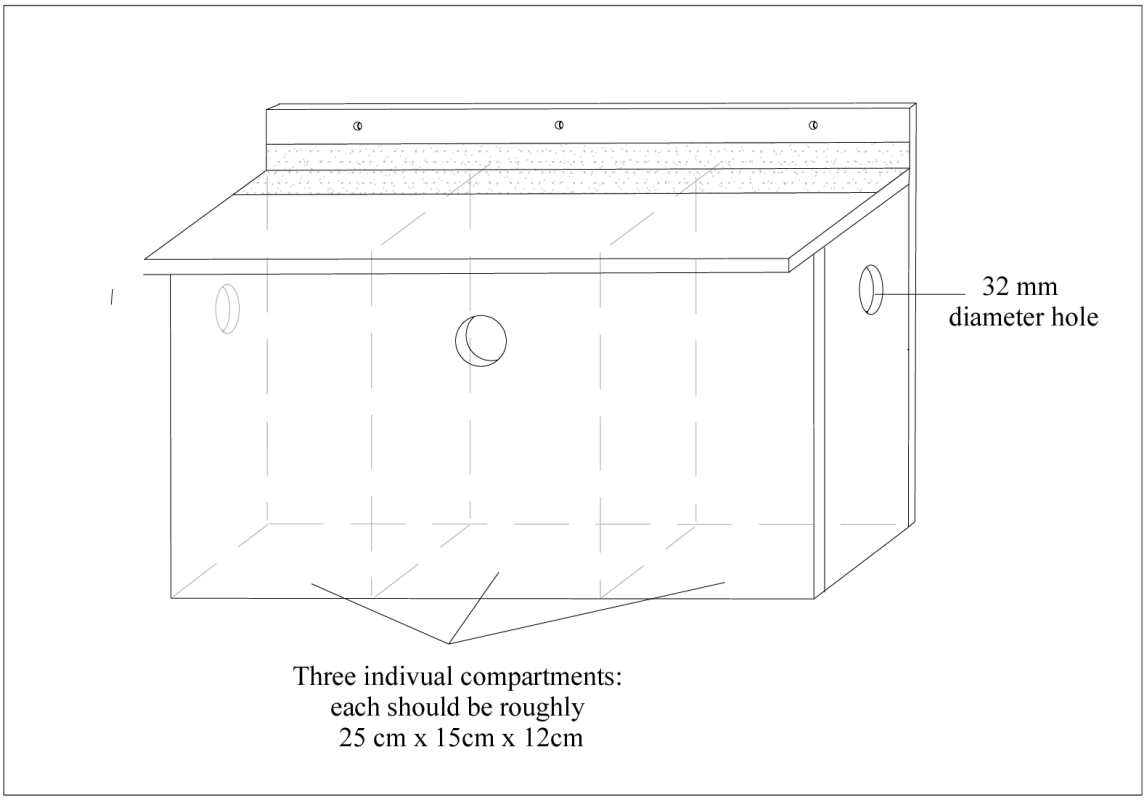

© JCA Limited 2024

Appendix 6: Examples of Insect Shelter Designs

An example of two different insect box designs

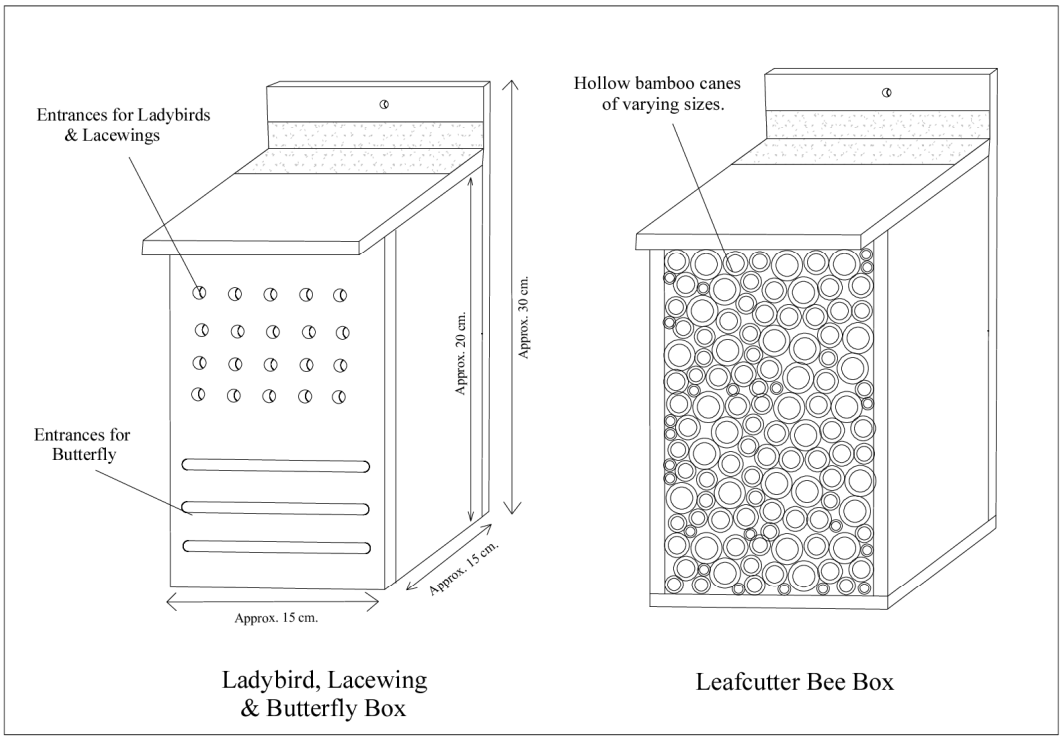

An example of a Bumblebee box design

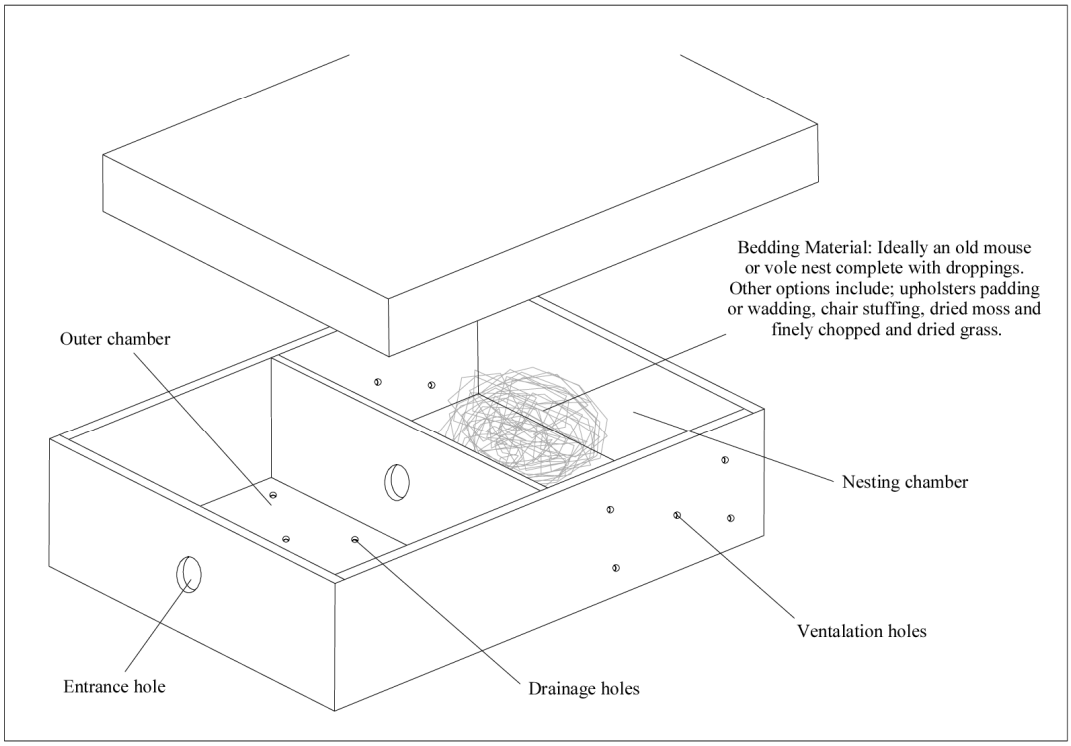

© JCA Limited 2024

Appendix 7: Example of Hedgehog Shelter Design

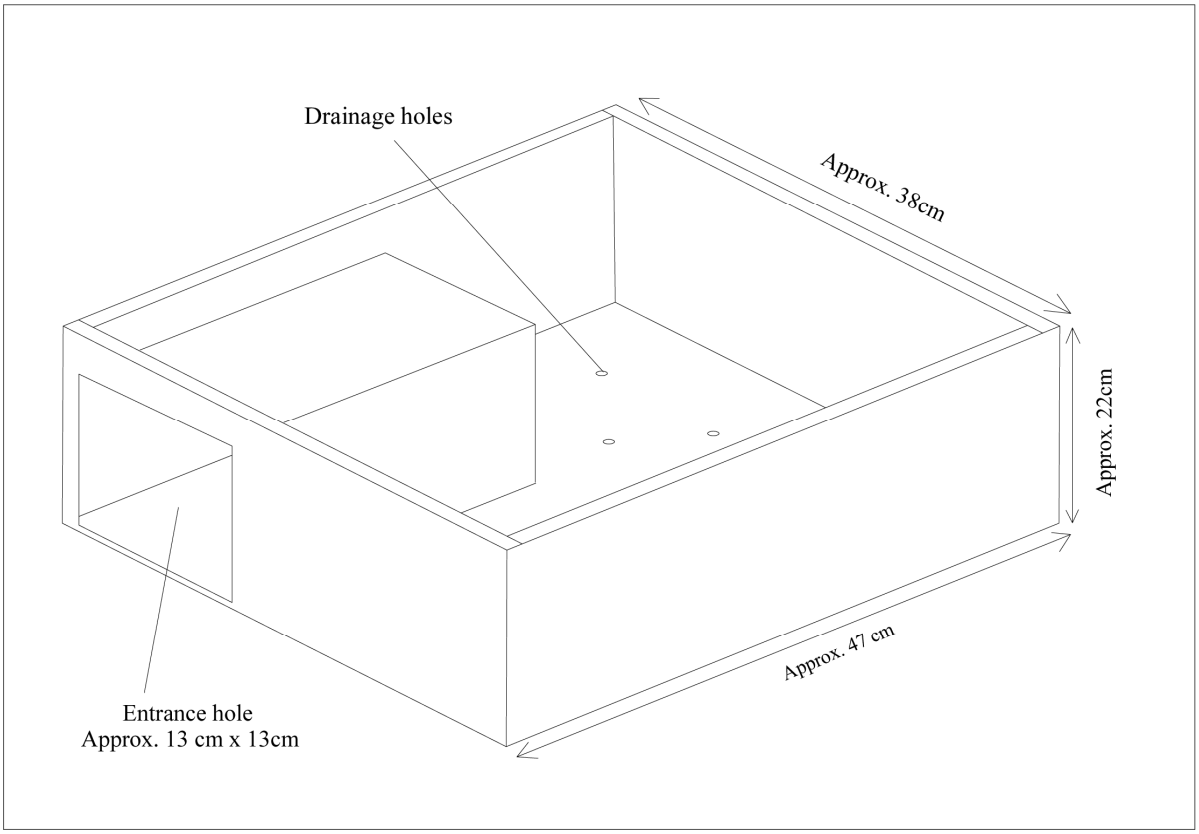

© JCA Limited 2024

Appendix 8: Author Qualifications

Adam West, Principal Ecologist
BSc (Hons) Animal and Wildlife Management.
Adam joined JCA to lead the expanding ecology department. Having returned to education as a mature student, Adam studied Countryside Management for two years before undertaking a Batchelor's degree, for which he was awarded First Class Honours. Adam has many years' experience in ecological consultancy, working on projects ranging from individual planning applications to national infrastructure projects. Adam holds a Natural England Level 1 great crested newt survey class licence, a Natural England Level 2 bat survey class licence (and the Scottish and Welsh equivalents) and a CSCS card.

James Foster, Assistant Ecologist
BSc (Hons) Biology.
James gained his undergraduate degree in biology in 2012 from University of Leeds. James has plenty of experience in ecology, having worked countless projects of different scales all over the north and midlands. James has 9 years of experience surveying anything from reptiles to hedgerows and holds a Great crested newt licence level 1 and is working towards his bat licence and barn owl licence.

© JCA Limited 2024

The information and advice which we have prepared and provided is true and has been prepared and provided in accordance with the CIEEM's Code of Professional Conduct. We confirm that the opinions expressed are our true and bona fide opinions.

Signed

.....

Adam West *ACIEEM*
28/08/23

Reviewed and authorised by

.....

James Foster
28/08/2023

Revised

.....

Adam West *ACIEEM*
16/12/24

© JCA Limited 2024

For and on behalf of ***JCA Ltd***

Registered Office:

Unit 80
Bowers Mill
Branch Road
Barkisland
Halifax
HX4 OAD

Tel. 01422 376335
Fax. 01422 376232
Email: info@jcaac.com
Web : www.jcaac.com

© JCA Limited 2024

ECOLOGICAL SERVICES

Ecological Pre-Planning Services

- Phase 1 Habitat Surveys
- Great Crested Newt eDNA Sampling
- Protected species: Bat, Wintering and Nesting Bird, Badger, Amphibian, Otter, Water Vole, White-Clawed Crayfish, Dormice and Reptile Surveys.
- Preparation for Environmental Impact Assessment (EIA)
- Invasive Species Surveys
- Code for Sustainable Homes
- Butterfly & Insect Surveys

Ecological Post-Planning Services

- Biodiversity Enhancement Plans
- Protected Species Mitigation
- Ecological Management (Bat and Bird box installation and inspection)
- Planting Schemes
- Monitoring of bird or bat boxes.

ARBORICULTURAL SERVICES

Guidance for Architects & Developers

- British Standard 5837 Surveys
- Arboricultural Implications Assessments (AIA)
- Arboricultural Method Statements (AMS)

Advice for Engineers, Loss Adjusters and Insurers

- Tree Surveys for Subsidence
- Heave Assessment
- Tree Root Identification

Advice for Local Authorities and Social Housing

- Tree Safety Surveys
- Specialist Decay Detection
- Landscape and Orchard Design

Tree Advice for the Legal Profession

- Subsidence Litigation
- Personal Injury and Accident Investigation
- Expert Witness, Planning Inquiries and Appeals

Veteran Tree Management

- Ancient Woodland Management
- Veteran Tree Management

Tree Health and Pest and Disease Management

- Pest and Disease Surveys
- Tree Health Checks
- Disease Mitigation and Control

JCA Limited
Arboricultural & Ecological Consultants

HEAD QUARTERS

Unit 80 Bowers Mill,
Branch Road,
Barkisland
Halifax, HX4 0AD

Company Reg No: 05005041
VAT No: 686 4674 78