Typical Manhole Detail - Type A

Depth from Ground Level to Soffit of Pipe 3m to 6m

For steps and access arrangements refer to the Design & Construction Guidance for foul and surface water sewers offered for adoption ("the Code")

** All lifting eyes to be pointed
** All PCC Rings to be Kitemarked

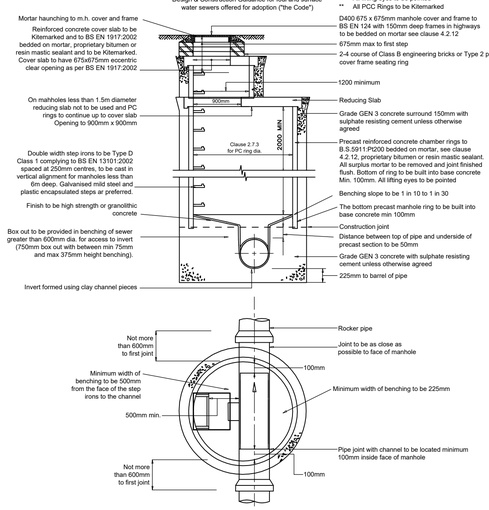

Typical Manhole Detail - Type B

Maximum Depth from Ground Level to Soffit of Pipe 3.0m

For steps and access arrangements refer to the Design & Construction Guidance for foul and surface water sewers offered for adoption ("the Code")

** All lifting eyes to be pointed
** All PCC Rings to be Kitemarked

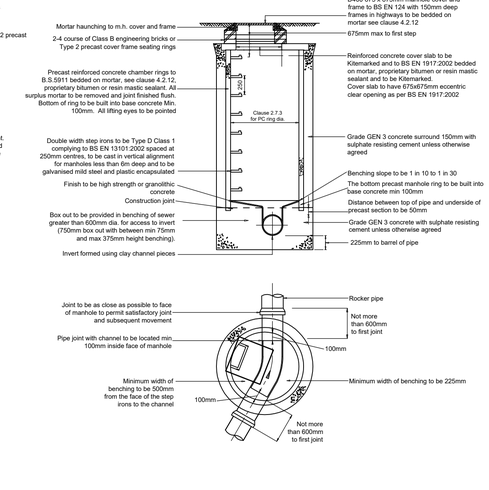

Typical Manhole Detail - Type C

Depth from Ground Level to Soffit of Pipe Less than 1.5m

For steps and access arrangements refer to the Design & Construction Guidance for foul and surface water sewers offered for adoption ("the Code")

** All lifting eyes to be pointed
** All PCC Rings to be Kitemarked

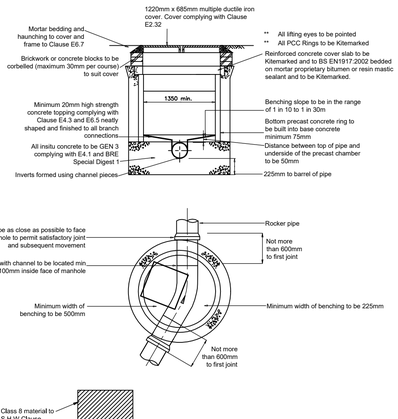

Private Precast Concrete Road Gully

The gully grate and frames in the shared surface carriageway must be the pedestrian type and comply with BS EN 124 Class D400.

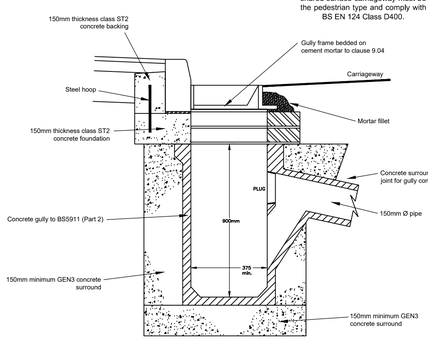

Typical Internal Backdrop Detail

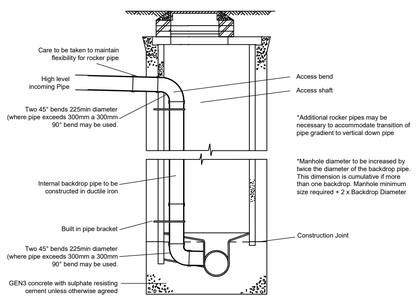

Propriety Junction Piece

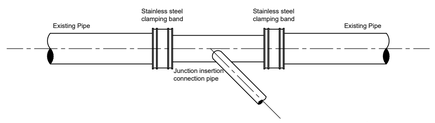

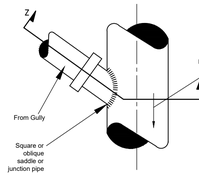

PLAN (PRIVATE)

Junction or saddle connection should be the oblique (Y piece) variety and should be secured into the sewer with bandseal couplings, with the incoming branch aligned in the direction of flow and positioned at 10 o'cock or 2 o'clock on the sewer section clock face

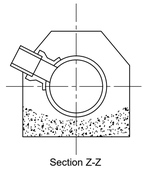

Section Z-Z

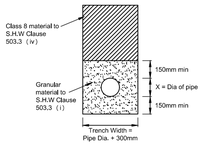

TYPICAL CLASS S SURROUND DETAIL
N.T.S

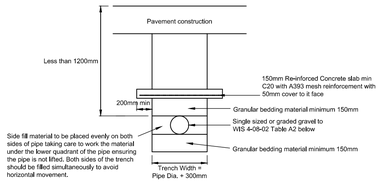

CONCRETE PROTECTION DETAIL
where cover is less than 1.2m in highway and less tan 0.90m in landscaped areas
N.T.S

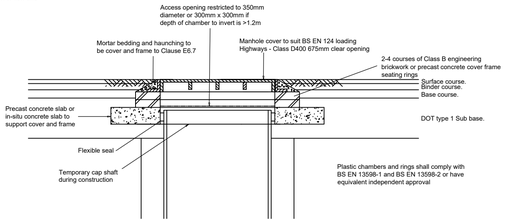

Typical Inspection Chamber Detail - Type 3 - D400 Cover

Typical Demarcation Chamber Detail Reduced Access (RAPPIC)

Precast concrete chamber to BS 5911:Part 2 & BS8301 kitemarked upto 1.0m deep Polypropylene inspection chambers to BS 7158:2001 kitemarked, minimum 450mm Ø upto 1.2m deep

Depth from cover level to invert of pipe chamber greater than 1.2m Maximum lateral drain diameter 150mm

B125 cover should be used in driveways and soft landscaped areas and a D400 when located in trafficked areas

Where a B125 cover and frame has been approved, this must not be coated in plastic and must have lifting eyes suitably sized to accommodate standard lifting keys. Screw down covers are not acceptable

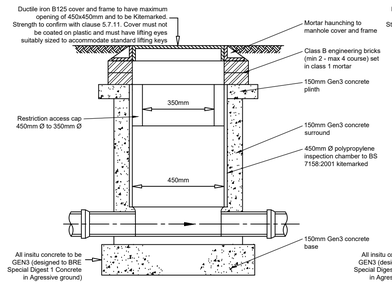

If Demarcation Chamber exceeds 3.00m in depth then the chamber should be constructed as a Type B manhole

Typical Demarcation Chamber Detail Normal Access (PPIC)

Precast concrete chamber to BS 5911:Part 2 & BS8301 kitemarked upto 1.0m deep Polypropylene inspection chambers to BS 7158:2001 kitemarked, minimum 450mm Ø upto 1.2m deep

Depth from cover level to invert of pipe chamber less than 1.2m Maximum lateral drain diameter 150mm

B125 cover should be used in driveways and soft landscaped areas and a D400 when located in trafficked areas

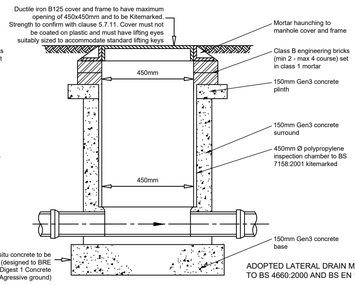

If Demarcation Chamber exceeds 3.00m in depth then the chamber should be constructed as a Type B manhole

ADOPTED LATERAL DRAIN MATERIAL TO BE UNPLASTICISED PVC PIPES TO BS 4660:2000 AND BS EN 1401-1 KITEMARKED

ICOSA WATER accept the use of plastic pipes in adoptable sewers, provided they comply with the following standrads:

- Solid wall PVC-U to BE EN 1401
- Spiral Wound Welded HDPE to EN 13476 Parts 1 & 2
- Structure-wall Thermoplastic to EN 13476 Parts 1 & 2
- Polypropylene to BS EN 1852.

ICOSA WATER do not have a specific maximum jetting pressure for adoptable pipelines. Provided that the pipes comply with the above standards, then they are deemed acceptable.

The contractor/developer to confirm manufacturer prior to works commencing on site.

Saddles not appropriate for gully connections unless pipe diameter is in excess of 300mm

Figure A (PRIVATE)

Connection to Crown of Surface Water Sewer or French Drain

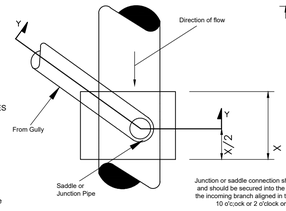

Plan

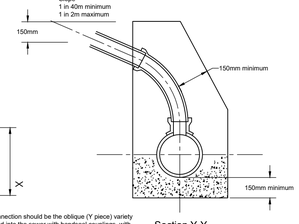

Junction or saddle connection should be the oblique (Y piece) variety and should be secured into the sewer with bandseal couplings, with the incoming branch aligned in the direction of flow and positioned at 10 o'cock or 2 o'clock on the sewer section clock face

Section Y-Y

Figure B (PRIVATE)

Connection to side of Surface Water Sewer or French Drain

Standard Drainage Notes:

1. All dimensions in millimetres unless stated otherwise.
2. Except where otherwise indicated gully gratings and frames are to be set at a level 6mm below finished carriageway level.
3. One vertical joint per course of brickwork shall be left open to allow drainage during construction.
4. The minimum depth from the top of grating to the top of gully outlet is to be 750mm when the connecting pipe is under carriageway and 60mm elsewhere.
5. All concrete and concrete products below ground to be sulphate resisting.
6. Gully pots are to be of pre cast concrete to BS5911 Part 2. Gully pots shall be trapped and provided with hot dipped galvanised stopper and chain with bayonet type fixing.
7. Road gully gratings and frames to be Type C250 grate and frame, kitemarked, heavy duty ductile iron to EN124: Part 1: 1995, non rock with captive hinge, 2 set on 2 courses of class B engineering brickwork bedded on class 1 mortar minimum depth of gully frame to be 100mm.
8. Class 1 mortar to Design (i) to SHW series 2400.
9. The contractor is obliged to obtain the necessary road opening and/or sewer connection licenses prior to work commencing on site.
10. Stainless steel clamping bands shall comply with water industry specification No. 4-41-01.
11. Junction pipe shall be salt glaze only.
12. For 150mm and 225mm diameter pipes, saddles are not acceptable. The connection into existing pipes should be via a propriety junction piece inserted into the main pipe run, fixed with clamping bands.
13. Step irons to comply with all relevant provisions set out in BS1247 Part 1 or 2.

NOTES:

1. All statutory undertakers equipment in footway and carriageway to be located and diverted before work commences.
2. A pedestrian route through the works shall be maintained at all times and clearly defined by suitable barriers and lights where necessary.
3. The contractor is obliged to obtain necessary road opening and/or sewer connection licence's prior to commencement of the works.
4. One vertical joint per course of brick work shall be left open to allow drainage during construction.
5. All statutory undertakers covers and frames to be adjusted to suit new carriageway levels prior to surfacing.
6. All existing gullies and drain runs to be cleaned of detritus and high pressure water jetted prior to commencement of works.
7. The existing sewers and culverts shown on this drawing are taken from various archives, drainage plans and sewer records. Some of this information is contradictory and the locations shown are interpreted using existing features and manhole locations shown on the survey. The exact depth and location should be verified on-site prior to commencing construction.
8. All adoptable sewer works and material to be in accordance with Sewer Sector Guidance (SSG) / DCG, and Icosa Water requirements and Kitemarked.
9. All drainage works that shall be adopted by Icosa Water to be subject to their approval prior to commencement on site.
10. All hard standing and impermeable areas outside the adopted highway boundary to be drained and collected in private drainage systems and discharged into the surface water sewer before water encroaches onto the public highway.
11. Gullies should not be located in the area of dropped crossings.
12. The chamber size of manholes with more than one connection in them may need to be increased and increment to accommodate the connections and bends.
13. Sewers to be laid in Class 'S' bedding (150mm granular bed and surround). Where depth of cover to top of the sewer is less than 1.2m in highways and verges (or less than 900mm in none vehicular access areas) then a concrete slab should be provided above granular bed and surround. Refer to Sewer Sector Guidance (SSG) / DCG for protection measures.
14. Granular bedding for pipes shall consist of aggregates from natural sources complying with the relevant provisions of BS 882 sized in accordance with the table across.
15. All pipes with a diameter larger or equal to 375mm shall be concrete. Pipes with a diameter less than 375mm shall be clay or ductile iron.
16. Vitrified clay pipes and fittings for sewers shall have flexible mechanical joints. Pipes for foul Sewers and surface water Sewers shall comply with relevant requirements of BS EN295 and BS 65 (surface water pipes only).
17. Manhole covers shall/must have a clear opening of 675mm and shall be Class D400 to BS EN 124 with 150mm deep frames in highways.
18. Filled ground must be filled and consolidated under the supervision and to the satisfaction of Icosa Water before any sewer works are carried out.
19. Icosa Water is not obliged to accept filter drain/land drainage runoff into the public sewer network or adoptable drainage system (directly or indirectly). An alternative method of disposal of the land drainage runoff will therefore be required and you will have to liaise with the Local Authority, Land Drainage Section with regard to the disposal of the filter drain/land drainage runoff.
20. Cover slabs must carry the BSI Kitemark or will be rejected by the Icosa Water Inspectors. Where the clear opening of the Kitemarked product is different to that of the cover and frame, a loading bearing slab should be fitted above the cover slab to bring the size down to 675mm x 675mm for Icosa's Water specified cover size. Please refer to Concrete Pipe Systems Association (CPSA), 'Technical Bulletin' issued Autumn 2004 for Kitemarked cover slab opening sizes.
21. Sulphate Resistant cement (C20-DC2) and precast concrete products must be used or a laboratory report provided proving that such precautions are not necessary.
22. The adoptable sewers should be a minimum of 1m and manholes 0.5m from kerb faces and service margins.
23. Sewers mast have 5.0m clearance from trees and hedges. (refer to Sewer Sector Guidance (SSG) / DCG for restrictions on tree planting adjacent to sewers).
24. All private work to be in accordance with current building regulations.
25. Drains passing through buildings to be protected with lintel cover.
26. No building to take place within 3.0m of an adoptable sewer.
27. No services to be sited over or within 1.0m of an adoptable sewer.
28. Private drainage connections not direct to manholes are to be made via a 45 degree junction and not saddles.
29. Bedding and backfill material to conform to the requirement of Water Industry Specification 4-08-02 (Table A2).
30. Any proposed sewers located within 5 meters of the public sewer shall be ductile iron pipe work.

Chamber Note:

1.0 Chambers

1.1 Particular requirements are as follows:

1.1.1 For manholes and man entry catchpits
A. Covers and frames shall comply with the following additional fitness-for purpose requirements:

For MA60 access covers and frames with 675 x 675 eccentric clear opening:
i) Frame may be grey iron of ductile iron, cover shall be ductile iron with double triangular configuration (non rock).
ii) Minimum depth of manhole frame to be 150mm.
iii) Bearing area of frame hall be solid and be not less than 100mm wide, with external corners of the bearing area being either square, curved or mitred shape in plan with the resulting bearing area width at that feature being not less than 95mm.
iv) The solid bearing area of frame may have hand holes amd drainage holes in any side of the frame providing that the total area of the holes in any one side does not exceed 60cm² and that no hole is situated within a quadrant of the bearing area of he frame at an external corner, such holes shall be positioned as near as possible to the external edge of the frame.

For MA60 access covers and frame with 675 x 675mm eccentric clear opening - (to HCD drawing No F3 application)
i) Shall be of ductile iron with double triangular cover configuration.
ii) Frame shall be at least 100mm deep.
iii) Bearing area of frame shall be solid and not less than 100mm wide.

For mat covers and frames:
i) Frame and cover shall be grey iron, sincle triangular cover.
ii) Frame shall be at least 150mm deep.
iii) Bearing area of frame shall be solid and not less than 100mm in width.

For MB2-60/45 covers and frames
i) Ductile iron cover and frame, single rectangular cover.
ii) Frame shall be at least 75mm deep.
iii) Bearing area of frame shall be not less than 75mm in width.

1.1.2 Ironwork on mortar bedding shall not be trafficked until mortar strength is expected to be 16N/mm².

TWITTER, TWEET, RETWEET and the Twitter logo are trademarks of Twitter, Inc. or its affiliates.

LinkedIn, the LinkedIn logo, the IN logo and InMail are registered trademarks or trademarks of LinkedIn Corporation and its affiliates in the United States and/or other countries.

Bryan G Hall Ltd. Registered in England & Wales Co No. 4104802

This drawing is copyright and shall not be reproduced nor used for any other purpose without the written permission of the Bryan G Hall ltd. This drawing must be read in conjunction with all other related drawings and documentation.

It is the contractors responsibility to ensure full compliance with the Building Regulations. Do not scale from this drawing, use figured dimensions only. It is the contractors responsibility to check and verify all dimensions on site. Any discrepancies to be reported immediately.
IF IN DOUBT ASK.

Materials not in conformity with relevant British or European Standards/Codes of practice or materials known to be deleterious to health & safety must not be used or specified on this project.

Bryan G Hall Limited has not checked or verified, and shall therefore not be liable for any inaccuracies which may be attributable to any base plan(s) reports, data or information provided by the client, or purchased by the consultant on the client's behalf, that may have been utilised within this drawing.

Bryan G Hall Limited shall not be liable for the use of this or any associated document, for any purpose, by any person other than that for which they were provided.

It remains the client's and/or its appointed contractor's responsibility to check for any discrepancies. Any anomalies discovered must be reported immediately to Bryan G Hall Limited for verification.

The locations of utilities apparatus, if shown, have been reproduced from plans supplied to Bryan G Hall Limited. Although care has been taken when duplicating this information, these locations are approximate only. No guarantee can be given by Bryan G Hall Limited for their accuracy. It is the client's or its appointed agent/contractor's responsibility to verify the exact locations on site by appropriate means prior to mechanical excavation.

Rev:	Date:	Amendment:	DRN	CHK	APR
A	24.10.24	Updated as per Icosa comments dated 15.10.24.	NB	IE	

BRYAN G HALL
CONSULTING CIVIL & TRANSPORTATION PLANNING ENGINEERS
LEEDS T 0113 246 1555
NEWCASTLE T 0191 249 5100
LONDON T 0203 5532336
Suite E15 | Josephs Well
Hanover Walk | LEEDS | LS3 1AB
W www.bryanghall.co.uk
E transportleeds@bryanghall.co.uk

Client: Newett Homes

Status:

Scale: NTS
Size: A1 - 841 x 594
Drawn: NB
Chkd: IE
Appvd:

Project: Residential Development
Penistone Road, Fenay Bridge

Title: Drainage Standard Details

Drawing No: 22/491/500/006
Job No: 22-491
Revision: A
Date: 06.02.23

smas WORKSAFE
CHAS Accredited Contractor ISO45.001
twitter.com/Bryanghall1
Bryan G Hall

Copyright Reserved Bryan G Hall Ltd.