H - XXXXXXX

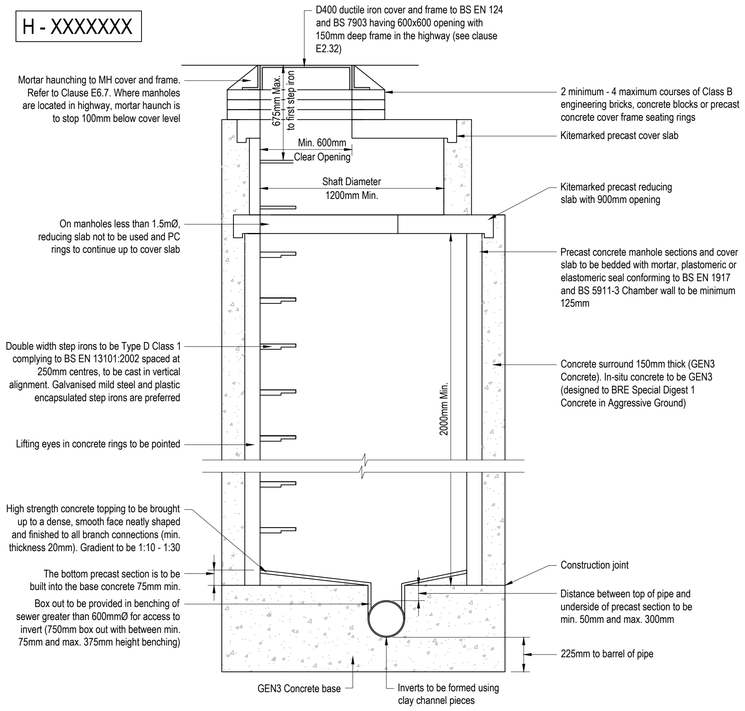

Typical Manhole Construction Type A1 (Design and Construction Guidance)

For use on manholes of depth from cover level to soffit level between 3000mm and 6000mm

Scale 1:20

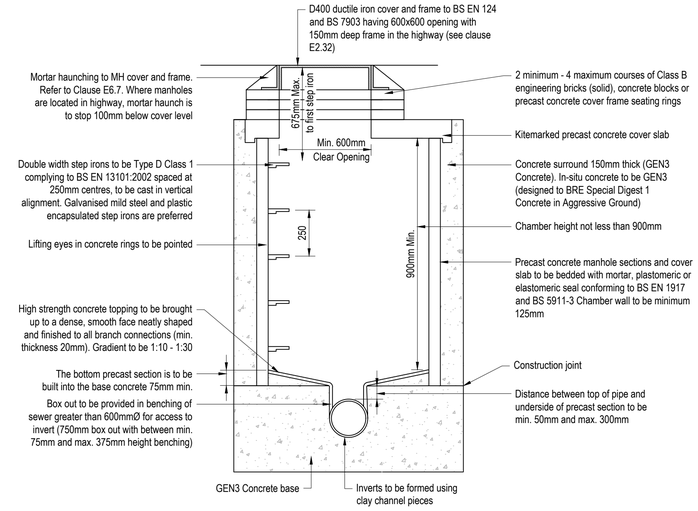

Typical Manhole Construction Type B (Design and Construction Guidance)

Maximum depth from cover level to soffit of pipe 3000mm

Scale 1:20

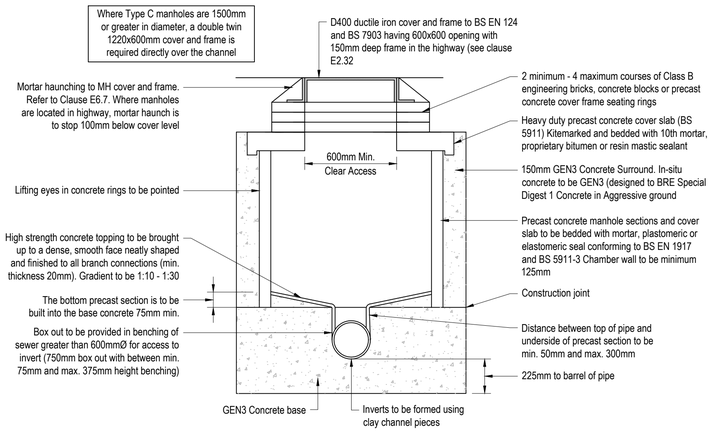

Shallow Manhole Construction Type C (Design and Construction Guidance)

Construction of manhole where depth from soffit to cover level less than 1.5m

Scale 1:20

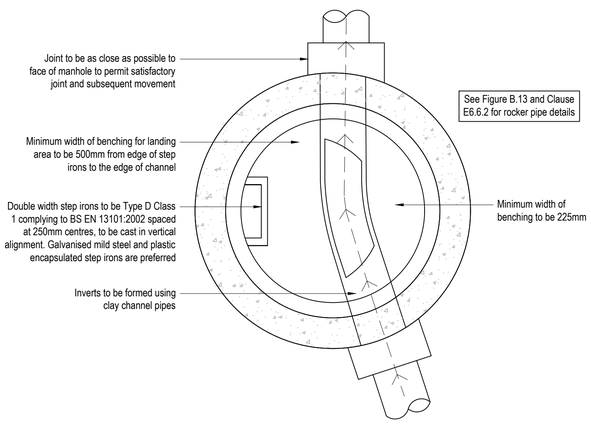

Typical Manhole Plan View Type A & B (Design and Construction Guidance)

Scale 1:20

Manhole Diameters	
Nominal Internal Diameter of Largest Pipe in Manhole (mm)	**Minimum Nominal Internal Dimension of Manhole (mm)**
Up to 300	1200
375-450	1350
500-700	1500
750-900	1800
Greater than 900	Specified Detailed Drawing Required

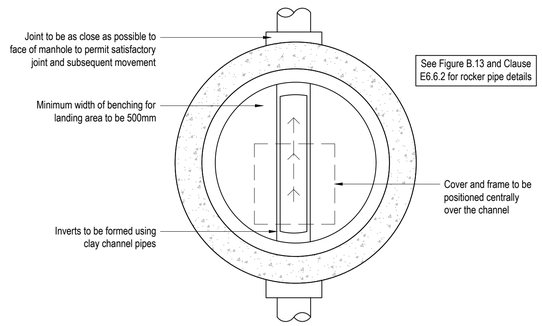

Shallow Manhole Plan View Type C (Design and Construction Guidance)

Scale 1:20

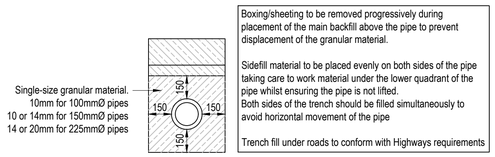

Typical Detail Through Class S Bed and Surround

Scale 1:20

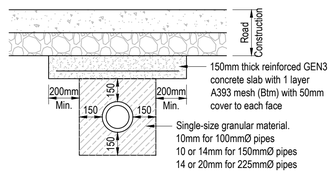

Typical Detail Through Class S Bed and Surround with Concrete Slab Protection

(to be used where sewer is less than 1200mm in depth in trafficked areas and less than 900mm in un-trafficked areas)

Scale 1:20

Yorkshire Water Notes

1. All adoptable sewer works and material to be in accordance with "Design and Construction Guidance (DCG)/Code for Adoption", The Relevant British/European and Yorkshire Water's Standards/Requirements/Addendum to the Mechanical and Electrical Specification and Kitemarked.
2. Manhole covers shall/must have a clear opening of 600mm and shall be Class D400 to BS EN 124 with 150mm deep frames in highways.
3. Filled ground must be filled and consolidated under the supervision and to the satisfaction of Yorkshire Water before any sewer works are carried out.
4. Yorkshire Water is **not** obliged to accept filter drain/land drainage run-off into the public sewer network or adoptable drainage system **(directly or in-directly)**. An alternative method of disposal of the land drainage run-off will therefore be required and you will have to liaise with the Local Authority, Land Drainage Section with regard to the disposal of the filter drain/land drainage run-off.
5. Cover slabs must carry the BSI Kitemark or will be rejected by Yorkshire Water Inspector. Where the clear opening of the Kitemarked product is different to that of the cover and frame, a loading bearing slab should be fitted above the cover slab to bring the size down to 600mm x 600mm for the Yorkshire Water specified cover size. Please refer to Concrete Pipe Systems Association **(CPSA)**, 'Technical Bulletin' issued Autumn 2004 for Kitemarked cover slab opening sizes.
6. Sulphate resistant cement **(C20-DC2)** and precast concrete products must be used or a laboratory report provided proving that such precautions are not necessary.
7. The adoptable sewers should be a minimum of 1m and manholes 0.5m from kerb faces and service margins.
8. Sewers must have 5 metres clearance from trees and hedges. **(please also refer Design and Construction Guidance for restrictions on tree planting adjacent to sewers)'.**
9. Sewers to be laid in Class "S" Bedding **(150mm granular bed and surround)**. Where depth of cover to top of the sewer is less than 1.2m in highways and verges **(or less than 900mm in none vehicular access areas)** then a concrete slab should be provide above granular bed and surround.
10. Bedding and backfill material to conform to the requirement of Water Industry Specification 4-08-02 **(Table A2)**.
11. The chamber size of manholes with more than one connection in them may need to be increased an increment to accommodate the connections and bends.
12. Yorkshire Water policy is not to accept Type "C" brick manholes and 1050mm dia manhole rings. Instead it is preferred that you use a type "B" manhole with 1200mm dia or 1500mm dia rings, with the opening sited over the channel where depth of cover to pipe soffit is 1 - 1.5m.
13. Adoptable plastic sewer pipes to be BSI Kitemarked **(certified to WIS 4-35-01 and BS/EN13476)**.Adoptable plastic sewer pipes to be laid in maximum 3 metre lengths unless there is a specific operational need to lay longer lengths.Plastic channel sections in manholes are not acceptable and Yorkshire Water would prefer clayware channel in manholes. We have found that plastic channels are difficult to set in concrete because they float and a satisfactory finish cannot be obtained on the benching.
14. Where a B125 cover and frame has been approved, this **must not** be coated in plastic and must have lifting eyes suitably sized to accommodate standard lifting keys. Screw down covers are not acceptable.
15. There should be enough clearance to accommodate the bedding for both pipes, approx. 300mm : if crossover is near the rocker then the clearance needed may be increased

For all clause and table references please refer to the Design and Construction Guidance contained within Code for Adoption

REV	DESCRIPTION	SIG	CHK	DATE
P01	First issue.	MA	GH	21/02/2025

RIVA HOMES

CROFT ST, BIRKENSHAW, BRADFORD, BD11 2HT

S104 CONSTRUCTION DETAILS SHEET 1

Eastwood CONSULTING ENGINEERS
St Andrew's House
23 Kingfield Road
Sheffield, S11 9AS
T: 0114 255 4554
E: mail@eastwoodce.com
eastwoodce.com

ECE PROJECT No	SCALE AT A1	STATUS	SUITABLE FOR
48785	1:20	S3	Comment

DRAWING NUMBER

Project	Originator	Zone	Level	Type	Role	Number	REV
48785	ECE	XX	XX	DR	C	0011	P01