Do not scale from this drawing, figured dimensions only should be used. If in doubt ASK.

GROUND FLOOR PLAN (STRUCTURE OVER)

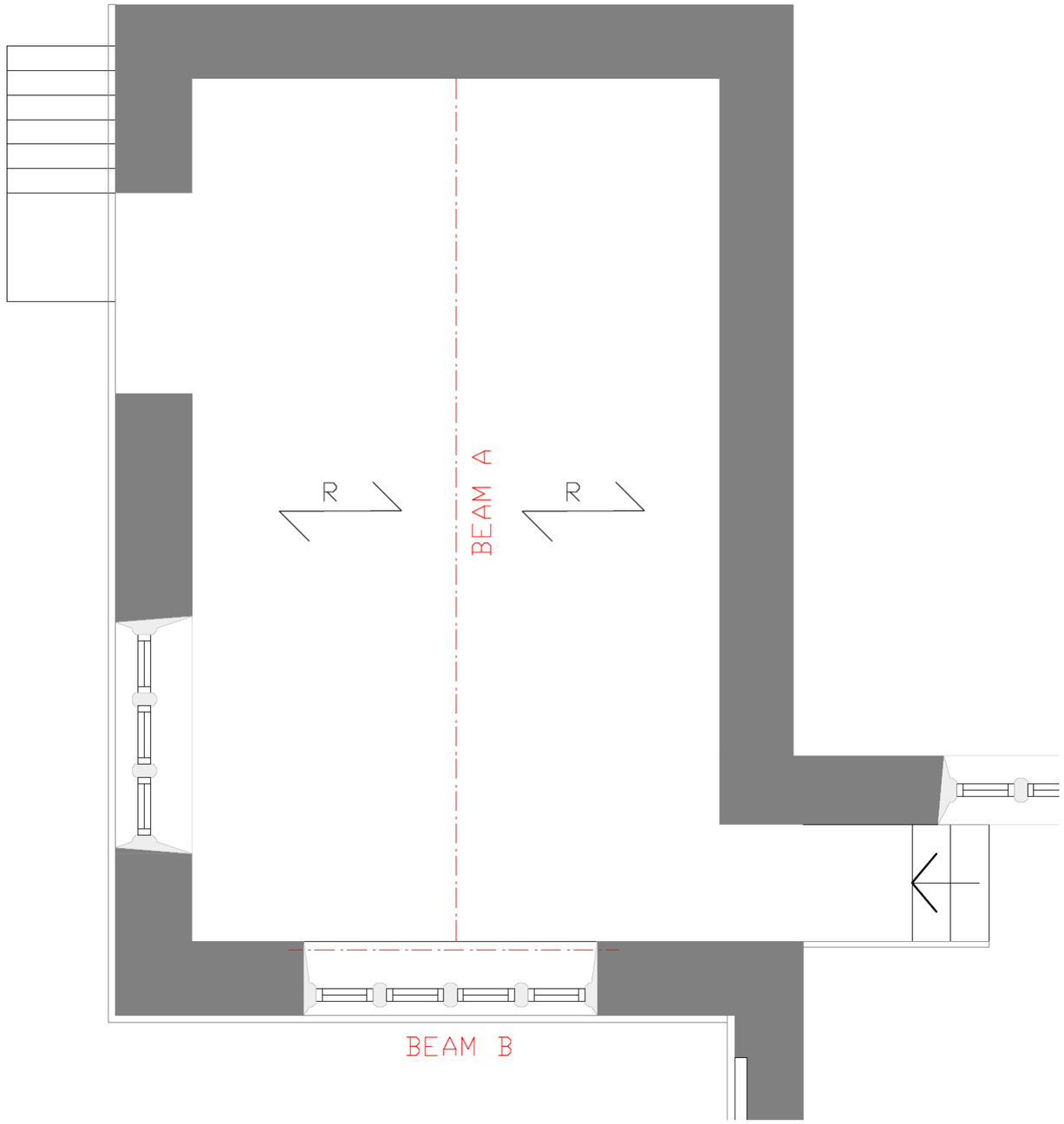

R : ex 50 x 150 mm Grade C24 replacement pitch rafters. Rafters to be birdsmouthed over supports and doubled to full perimeter of any rooflights.

BEAM A : 305 x 165 x 46 UB (S355) ridge beam. Beam to have 100 mm bearing onto 440 x 102 x 215 mm concrete padstone to window bearing and bolted to 440 x 102 x 215 mm concrete padstone to chimney bearing as detail below.

BEAM B : 152 UC 23 UB (S355) replacement inner leaf lintel. Beam to have 150 mm bearing each end onto 215 x 140 x 215 mm concrete padstone.

CHIMNEY FIXING DETAIL

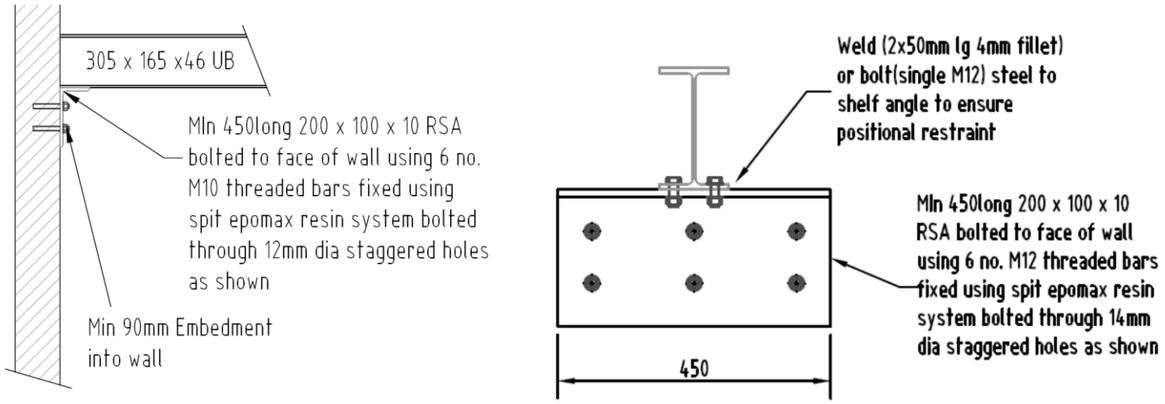

Notes:

- Setting out to architect's details.
- All fabrication undertaken to execution class 2 (EXC -2).
- All lintels installed in strict accordance with manufacturers guidance, lintels and beams with plates to be confirmed as suitable for proposed wall construction by contractor prior to ordering.
- All exposed/external steelwork to be galvanised.
- All column base plates to have non shrink high strength grout to underside over strip/pad foundations in accordance with manufacturers specification.
- All non detailed connections to be traditional carpentry as noted above.

REV:	REVISION DESCRIPTION:	DRN:	CHK:	DATE:

Drawing No. : **WA638 – SK01**	Rev: -
Title: Scheme Sketch Project: The Old School	Client: - Scale at A3: - / Drawn by: LA / Checked by: LA / Date: May 23

Design Consultants