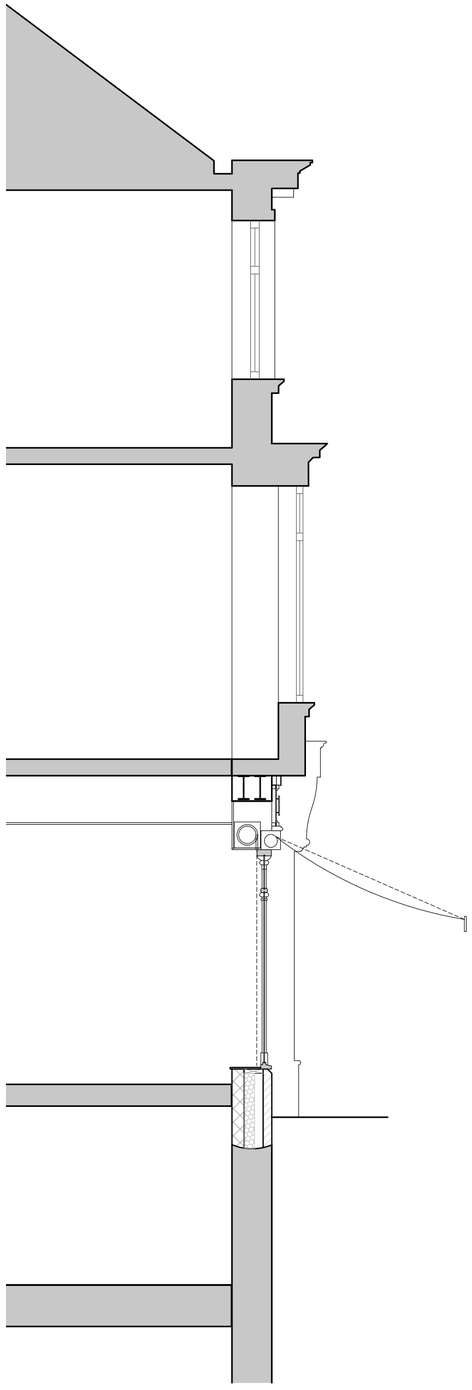

1 SECTION AA
Scale: 1:50

0 2m
scale at 1:50

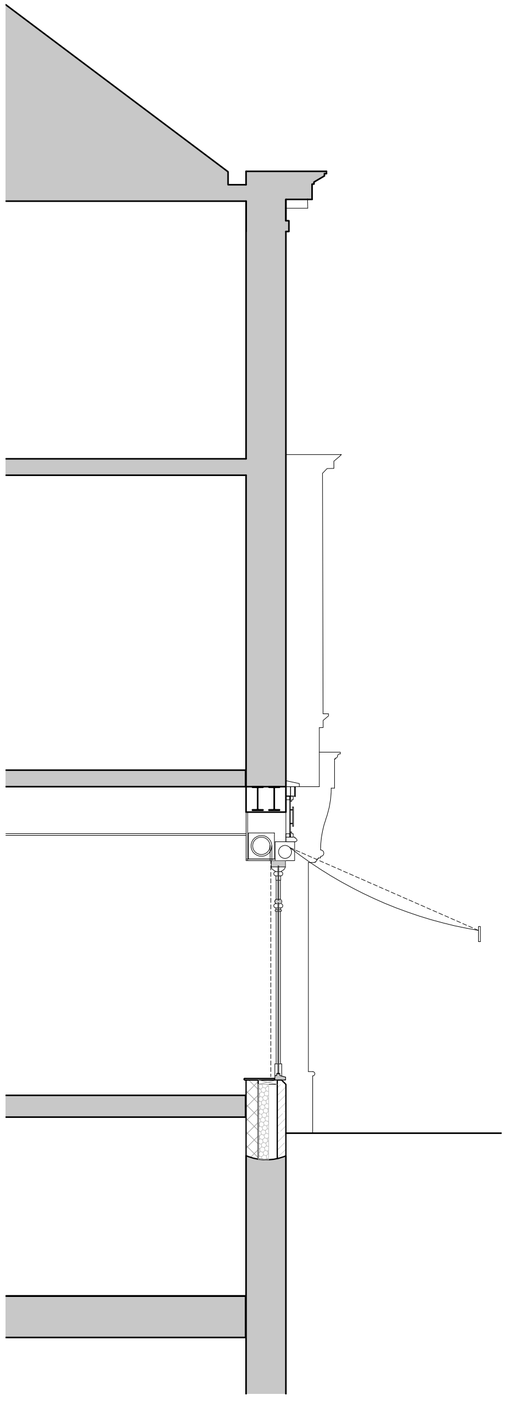

2 SECTION BB
Scale: 1:50

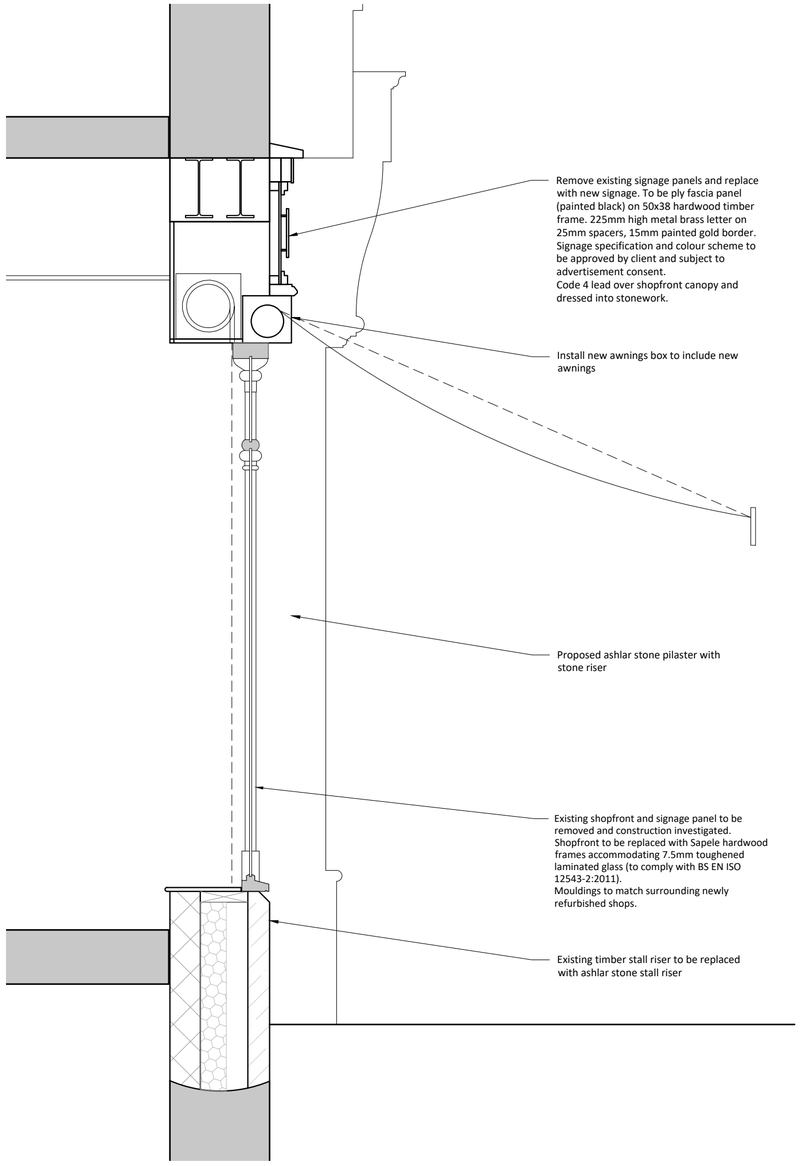

3 DETAIL SECTION
Scale: 1:20

0 1m
scale at 1:20

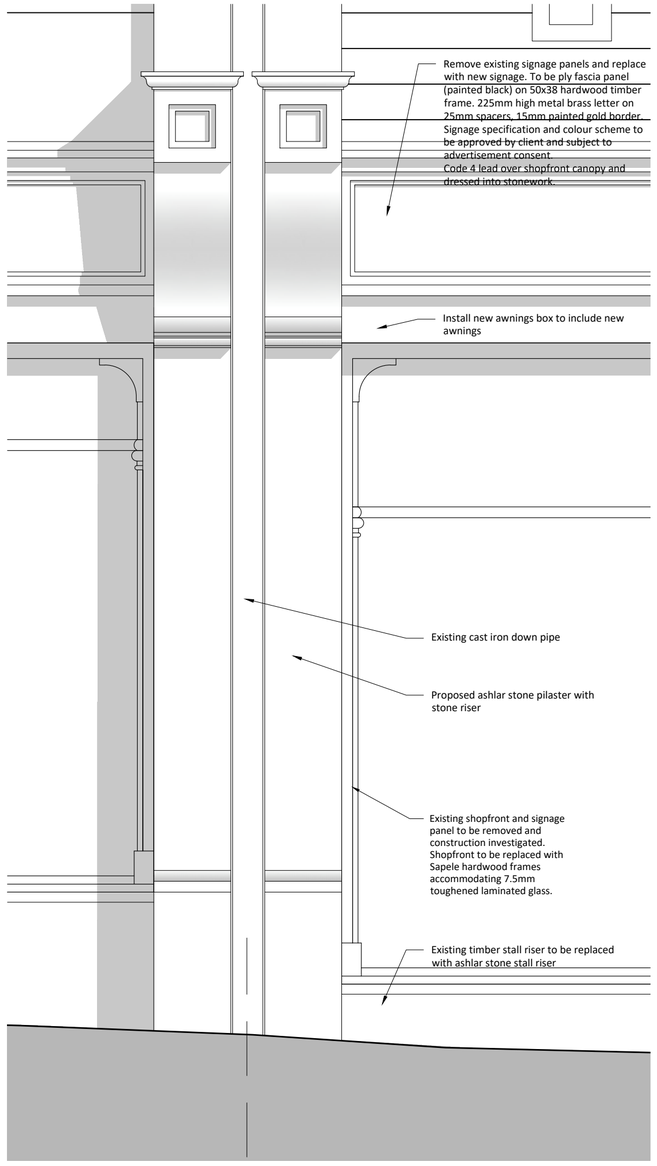

4 DETAIL ELEVATION
Scale: 1:20

0 1m
scale at 1:20

Examples of proposed shopfront details from Northgate and Queensway Arcade

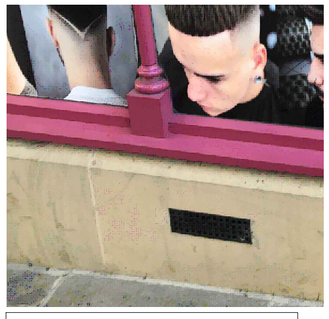

Examples stone stall riserand window cill detail to Northgate

Examples of proposed shopfront and pilaster details from Northgate

NOTES:

© AKA ARCHITECTS GROUP LTD.
■ THIS DRAWING IS THE SUBJECT OF COPYRIGHT WHICH VESTS IN AKA ARCHITECTS GROUP LTD.. IT IS AN INFRINGEMENT OF COPYRIGHT TO REPRODUCE THIS DRAWING, BY WHATEVER MEANS, INCLUDING ELECTRONIC, WITHOUT THE EXPRESS WRITTEN CONSENT OF AKA ARCHITECTS GROUP LTD. WHICH RESERVES ALL ITS RIGHTS.

AKA ARCHITECTS GROUP LTD. ASSERTS ITS RIGHTS TO BE IDENTIFIED AS THE AUTHOR OF THIS DESIGN. ALL DRAWINGS, IMAGES AND MODELS ARE SUBJECT TO THE COPYRIGHT, DESIGNS & PATENTS ACT 1988

■ DRAWING NOT TO BE SCALED.
■ REPORT ERRORS & OMISSIONS TO ARCHITECT.
■ CHECK ALL DIMENSIONS ON SITE.
■ DRAWING TO BE READ IN CONJUNCTION WITH HEALTH AND SAFETY PLAN AND ALL RELEVANT RISK ASSESSMENTS.

Residual Risks
In addition to the hazard/risks normally associated with the types of work detailed on this drawing take note of the above. It is assumed that all works on this drawing will be carried out by a competent contractor working, where appropriate, to an appropriate method statement.
Safety Health and Environmental Information Box

Rev	Revision	Date	Drwn	Chkd
A	Issued to Local Planning Authority		RP	DD

Project: The Principal
Dewsbury, WF13 1DT

Client: Ajmal Properties Limited

Layout Title
Proposed Sections

Drawing Number

project	number	status / rev	
024	(PL)016	A	P - Preliminary C - Construction R - Record

Project No. 2230060

Scales @ A2: Various

t: Newcastle (head office): 0191 265 7080
e: info@sadlerbrown.co.uk
w: www.architects-group.com
copyright: AKA Architects Group Ltd.

SADLER BROWN®
www.architects-group.com