BIODIVERSITY ENHANCEMENT PLAN
at
Land off Beaumont Park Road
Huddersfield
West Yorkshire
HD4 5JT

Client:
Manbir Bains

Client Address:
58 Beaumont Park Road
Huddersfield
HD4 5JP

Client Contact:
07931782869 (Tel)

JCA Ref:
21434b/ADo

Date of Report:
15/10/2024

JCA Limited
Arboricultural & Ecological Consultants

Quality Assurance

Version	**Desktop Survey Completed:**		**Site Surveyed:**		**Report Completed:**		**Checked:**	
	Date	Name	Date	Name	Date	Name	Date	Name
Planning	N/A	N/A	N/A	N/A	10/10/24	Alex Donovan	10/10/24 12/10/24	James Foster Adam West

This report has been prepared and provided in accordance with the *British Standard 42020: Biodiversity – Code of practice for planning and development* and the *CIEEM's Code of Professional Conduct*

Risk Assessment Completed	N/A
Bio-security Procedure Completed	
Lone Worker Procedure Completed	

© JCA Limited 2024

Contents

1 Introduction **4**
1.1 Purpose of the Report **4**
1.2 Terms of Reference **4**
1.3 Scope of the Report **4**
1.4 Details of Proposed Development **4**
1.5 Site Description **4**
2 Local Biodiversity Action Plan **5**
3 Retention of Ecologically Valuable Features **7**
3.1 Pre-development **7**
4 Invasive Weed Eradication **9**
5 Habitat Creation **10**
5.1 Summary **10**
5.2 Grassland Planting **10**
5.3 Hedgerow Planting **12**
5.4 Tree Planting **14**
5.5 Aftercare **15**
6 Faunal Boxes **17**
6.1 Summary **17**
6.2 Bat Roosting Opportunities **17**
6.3 Bird Boxes **19**
6.4 Insect Boxes **21**
6.5 Hedgehog Shelters **22**
7 Ecological Recommendations **23**
8 Conclusion **25**
9 References **26**
Appendix 1: Proposed Development **29**
Appendix 2: Examples Artificial Bat Box Designs **31**
Appendix 3: Examples Artificial Bird Box Designs **32**
Appendix 4: Examples of Insect Shelter Designs **33**
Appendix 5: Example of Hedgehog Shelter Design **34**
Appendix 6: Example of planting a tree in an open grass strip **35**
Appendix 7: Example of planting a tree within a street **36**
Appendix 8: Example of planting a tree **37**
Appendix 9: Author Qualifications **38**

© JCA Limited 2024

1 Introduction

1.1 Purpose of the Report

1.1.1 In **September 2024**, JCA Ltd were commissioned by **Manbir Bains** to produce a **Biodiversity Enhancement Plan** (**BEP**) for a site located at **Land off Beaumont Park Road**, **Huddersfield, HD4 5JT** hereafter referred to as 'the site'.

1.1.2 This report will aim to enhance the site's value to wildlife, through the retention of any existing features of value to wildlife, the creation of new habitats and the provision of new roosting/nesting opportunities within the proposed development.

1.2 Terms of Reference

1.2.1 To support the fulfilment of the above, the following have previously been undertaken:

- JCA Ltd. – Preliminary Ecological Appraisal (PEA), Nov 2023 (21434/ADo).
- JCA Ltd. – Biodiversity Accounting Assessment (BAA), Jun 2024 (21434a/ADo).
- JCA Ltd. – Invasive Species Method Statement, Sep 2024 (21434d/ADo).

1.3 Scope of the Report

1.3.1 This report is compiled in accordance with guidance outlined in the National Planning Policy Framework (NPPF) so that the development takes into account the value of ecosystem services and enhance ecological networks.

1.4 Details of Proposed Development

1.4.1 The development proposed is the construction of a residential dwelling.

1.4.2 Under the current scheme, a large proportion of existing habitats will be removed to facilitate the development. Any remaining habitat will be within a private garden area.

1.5 Site Description

1.5.1 The site is located at Ordnance Survey (OS) National Grid Reference **SE 13137 14855**, with nearby postcode **HD4 5JT**. The site is bordered to the north by urban residential areas and sports fields, and urban residential and deciduous woodland on all other sides.

© JCA Limited 2024

2 Local Biodiversity Action Plan

2.1.1 The Local Biodiversity Action Plan that covers **the site** is the **Kirklees BAP** (**KBAP**). This BEP aims to incorporate KBAP habitats and to attract and support KBAP species, through either directly planting KBAP floral species, or creating habitats that will attract these species.

2.1.2 The habitats listed within the KBAP are:

Table 1: List of KBAP priority habitats.

Habitat	Key geographical areas in Kirklees
Arable field margins	Pennine foothills
Blanket bog	Uplands
Hedgerows	Pennine foothills
Inland rock outcrop and scree habitats	Valley slopes and quarries in any area
Lowland dry acid grassland	Valley slopes
Lowland heathland	Valley slopes
Hay meadows	Pennine foothills and mid-altitudinal grasslands
Lowland mixed deciduous woodland	Vally slopes and Pennine foothills
Open mosaic habitats on previously developed land	Urban areas
Ponds	Relevant to occurrence of protected species (white-clawed crayfish, great crested newt, water vole *L. natans*)
Reedbeds	Floodplain
Rivers	Floodplain
Traditional orchards	Pennine foothills
Upland flushes, fens and swamps	Uplands
Upland heathland	Uplands
Upland mixed Ashwood	Valley slopes (upland): component of upland oak woodland
Upland oak woodland	Uplands
Wet woodland	Floodplain: also, component of lowland mixed deciduous woodland and upland oak woodland
Wood-pasture & parkland	Pennine foothills and valley slopes
Scrub	Primarily valley slopes and Pennine foothills but can occur elsewhere. Includes open mosaic habitats on previously developed land (mostly in urban areas)
Other semi-natural grassland (wet/rush pasture and rough grassland)	Mid-altitudinal grasslands and Pennine foothills
Riverine	Floodplain: corridors include reedbeds and rivers

2.1.3 The species listed within the KBAP are:

Table 2: List of KBAP priority species.

Group	Common name	Scientific name
Birds	Common bullfinch	*Pyrrhula pyrrhula*
Birds	Common cuckoo	*Cuculus canorus*
Birds	Common grasshopper warbler	*Locustella naevia*
Birds	Common linnet	*Linaria cannabina*
Birds	Common starling	*Sturnus vulgaris*
Birds	Eurasian curlew	*Numenius arquata*

© JCA Limited 2024

Birds	Eurasian tree sparrow	*Passer montanus*
Birds	Grey partridge	*Perdix perdix*
Birds	Hawfinch	*Coccothraustes coccothraustes*
Birds	Hedge accentor (dunnock)	*Prunella modularis*
Birds	House sparrow	*Passer domesticus*
Birds	Lesser redpoll	*Acanthis cabaret*
Birds	Northern lapwing	*Vanellus vanellus*
Birds	Red grouse	*Lagopus lagopus Scotica*
Birds	Reed bunting	*Emberiza schoeniclus*
Birds	Ring ouzel	*Turdus torquatus*
Birds	Sky lark	*Alauda arvensis*
Birds	Song thrush	*Turdus philomelos*
Birds	Spotted flycatcher	*Muscicapa striata*
Birds	Tree pipit	*Anthus trivialis*
Birds	Twite	*Linaria flavirostris*
Birds	Willow tit	*Poecile montanus*
Birds	Wood warbler	*Phylloscopus sibilatrix*
Birds	Yellow wagtail	*Motacilla flava*
Birds	Yellowhammer	*Emberiza citrinella*
Invertebrates	Northern wood ant	*Formica lugubris*
Invertebrates	Small heath butterfly	*Coenonympha pamphilus*
Invertebrates	Wall brown butterfly	*Lasiommata megera*
Invertebrates	White-letter hairstreak butterfly	*Satyrium w-album*
Fish	Atlantic salmon	*Salmo salar*
Fish	Brook lamprey	*Lampetra planeri*
Fish	Brown trout	*Salmo trutta*
Fish	European eel	*Anguilla anguilla*
Fish	River lamprey	*Lampetra fluviatilis*
Amphibians	Common toad	*Bufo bufo*
Amphibians	Great crested newt	*Triturus cristatus*
Reptiles	Adder	*Vipera berus*
Reptiles	Common lizard	*Zootoca vivipara*
Reptiles	Grass snake	*Natrix natrix*
Reptiles	Slow worm	*Anguis fragilis*
Terrestrial mammals	Brown hare	*Lepus europaeus*
Terrestrial mammals	Brown long-eared bat	*Plecotus auritus*
Terrestrial mammals	Mountain hare	*Lepus timidus*
Terrestrial mammals	Noctule bat	*Nyctalus noctula*
Terrestrial mammals	Otter	*Lutra lutra*
Terrestrial mammals	Polecat	*Mustela putorius*
Terrestrial mammals	Soprano pipistrelle	*Pipistrellus pygmaeus*
Terrestrial mammals	Water vole	*Arvicola terrestris*
Terrestrial mammals	West European hedgehog	*Erinaceus europaeus*

2.1.4 Measures to attract and support KBAP species, through either directly planting KBAP floral species, or creating habitats that will attract these species, will be included within this report.

© JCA Limited 2024

3 Retention of Ecologically Valuable Features

3.1 Pre-development

3.1.1 For a comprehensive description of the site's current ecological value please see the accompanying PEA (21434/ADo, 2023) and BAA (21434a/ADo, 2024). A summary of the habitats and features present in this report can be seen below.

3.1.2 The site consists predominantly of five habitats, as per the UKHab habitat classification system, Version 2.01 (2023):

- Other neutral grassland
- Other woodland, broadleaved
- Bramble scrub
- Mixed scrub
- Developed land, sealed surface

3.1.3 A **botanical survey** was recommended to determine the presence/absence of protected or notable plant species.

3.1.4 To mitigate against the loss of floral species that may support invertebrates, it was recommended that native scrub and wildflowers, including ragwort, be planted to provide resources for invertebrate. Additionally, provisions of insect house will help boost invertebrate diversity.

3.1.5 The site has the potential to support amphibians and reptiles. A **Habitat Suitability Index (HSI)** assessment was recommended for ponds within 500m to assess suitability to support great crested newts, and potential **eDNA sampling**, dependent on the HSI results. A **reptile survey** was recommended to assess use of the site by reptiles. It was recommended that vegetation clearance be conducted under the supervision of an **Ecological Clerk of Works** (**ECoW**), who will monitor works for any signs of reptiles. Should a reptile be found, the ECoW will move it to a place of safety suitable for the species.

3.1.6 The woodland and scrub were assessed to have the potential to supporting nesting birds. Vegetation clearance and works in the immediate vicinity of the trees and scrub may disturb any nesting birds that may be present. A **nesting bird survey** no more than **24 hours** before the commencement of works was recommended, if works occur within the nest bird season (1st Feb-31st Aug).

3.1.7 The PEA (21434/ADo) did not identify any Potential Roosting Features (PRFs) for bats on the site. **No** trees onsite were observed to have PRFs, and were

© JCA Limited 2024

assessed to have **negligible** potential, but the site has the potential to support commuting and foraging bats. The development will likely increase lighting levels. All lighting must consider wildlife and be in accordance with the ILP Guidance GN01 and GN09. A key point is the avoidance of internal and external light spill. Where possible, lighting should be timed, or on sensors and avoid the hours between sunset and sunrise, when bats are out foraging.

3.1.8 The site has the potential to support commuting and foraging badgers using the site. A **badger activity survey** was recommended.

3.1.9 The site has the potential to support hedgehogs. It was recommended that vegetation clearance be conducted under the supervision of an **ECoW**, who will monitor works for any signs of hedgehogs. Should a hedgehog be found, the ECoW will move it to a place of safety suitable for the species. New border walls or fences should include holes measuring a minimum of 13cm x 13cm to allow free movement in and around the site. Provision of resting/hibernating in the form of hedgehog houses is also recommended.

3.1.10 The proposed development will involve the removal of large portion of existing onsite habitats, with any retained habitat being reclassified as vegetated garden, as it will be within the boundary of a private residential dwelling. Works will likely cause disturbance to the remaining habitats during the construction phase of the development due to increased activity, noise, and lighting.

© JCA Limited 2024

4 Invasive Weed Eradication

4.1.1 Invasive plant species are those plants listed under Schedule 9, Part II of the Wildlife and Countryside Act 1981 (as amended) or described on the Non-Native Species Secretariat (NNSS) website. Invasive species include, but are not limited to; giant hogweed, Japanese knotweed, Himalayan balsam, rhododendron, and montbretia. Under the Wildlife and Countryside Act 1981 (as amended) it is an offence to plant or cause the spread of Invasive Plant Species in the wild and therefore it is a legal obligation to remove them.

4.1.2 Montbretia *Crocosmia x crocosmiiflora* was identified onsite. The following invasive species were not identified onsite, but records from the PEA desk study showed that have been identified within 2km of the site in the last 10 years: Japanese knotweed *Fallopia japonica*, rhododendron *Rhododendron ponticum*, yellow azalea *Rhododendron luteum*, giant hogweed *Heracleum mantegazzianum*, and Himalayan balsam *Impatiens glandulifera*.

4.1.3 An Invasive Species Method Statement has been produced (21434d/ADo) to provide guidance and advice for the removal of montbretia, and precautionary advice for the other species.

© JCA Limited 2024

5 Habitat Creation

5.1 Summary

5.1.1 Under the proposed scheme, the site will have a net loss of 0.40 biodiversity units (BU), reducing a baseline value of 0.52 BU to 0.12 BU, equivalent to a 77.23% loss, as shown by the BAA report (21434a/ADo). As the site will be used as a private residential dwelling, any created or retained habitats would be classed as vegetated garden, which has low biodiversity value, according to the Statutory Biodiversity Metric.

5.1.2 Despite gardens being classed as low value within the metric, gardens can support a surprising and diverse array of wildlife. There are number of practices that can maximise biodiversity in back gardens and are particularly relevant to this proposed development. This can be achieved by minimising practices such as pesticides, by planting native flowers, shrubs/hedges, and trees, and creating wildlife features such as piles of logs and providing artificial nesting and roosting sites.

5.1.3 The site can be of benefit to local wildlife through incorporating one or more of the following:

- Planting of patches of wildflower-rich grassland,
- Planting of native shrubs/hedgerows,
- Planting of individual trees,
- Inclusion of faunal boxes to target priority species of local importance, namely, bat, bird, hedgehogs, and invertebrate species.

5.1.4 It is recommended that consultation with a landscape architect is conducted to prepare a planting plan to improve the habitats present and create new habitats, including incorporating plant species beneficial to biodiversity.

5.1.5 It is recommended that a planting plan should include night-scented flowers that will attract night-flying insects, particularly moths, which in turn are likely to attract bats. Such plants include honeysuckles *Lonicera* spp, jasmines *Jasminum* spp, evening primrose *Oenothera biennis*, and sweet rocket *Hesperis matronalis*. Further advice on bat-friendly plants and gardening can found in Encouraging Bats from the Bat Conservation Trust (BCT).

5.2 Grassland Planting

5.2.1 Setting aside areas of grassland for wildflower planting would be beneficial to local invertebrate populations, particularly pollinators such as bees, butterflies, and moths. Increased invertebrate abundance would then benefit species that feed on invertebrates, such as birds and bats.

© JCA Limited 2024

5.2.2 Species Selection: The species chosen include those that are shade tolerant as they will be subject to a degree of shading by the surrounding trees. Other species are those more typical of wildflower grassland planting, such as those that are nectar and pollen rich, and so will attract insects such as bees and butterflies. The grasses are visually attractive, and many are the host plant of butterfly species. It is anticipated that the insects that are attracted to the Site will then provide a food source for larger animals, thus encouraging species such as bats and birds to the site.

5.2.3 Species Specifications: The recommended seed mix is EL2 Flowering Lawn Mixture from Emorsgate Seed, sown at 40kg per hectare. A list of the species included within EL2 Flowering Lawn Mixture can be seen below in **Table 3**.

Table 3: List of species in EL2 Flowering Lawn Mixture from Emorsgate Seeds.

Flowering Plants			Grasses		
Botanical Name	**Common Name**	**%**	**Botanical Name**	**Common Name**	**%**
Achillea millefolium	Yarrow	1.00	*Agrostis capillaris*	Common Bent	8.00
Anthyllis vulneraria	Kidney vetch	1.00	*Cynosurus cristatus*	Crested Dog's-tail	28.00
Betonica officinalis	Betony	0.40	*Festuca rubra*	Red fescue	24.00
Centaurea nigra	Common Knapweed	1.50	*Phleum bertolonii*	Smaller Cat's-tail	4.00
Galium album	Hedge bedstraw	0.40	*Poa pratensis*	Smooth-stalked meadow grass	16.00
Galium verum	Lady's Bedstraw	1.50		**Total**	**80**
Knautia arvensis	Field Scabious	0.40			
Leontodon hispidus	Rough hawkbit	0.40			
Leucanthemum vulgare	Oxeye Daisy	1.00			
Lotus corniculatus	Birds-foot trefoil	0.60			
Medicago lupulina	Black medick	1.00			
Plantago lanceolata	Ribwort plantain	0.40			
Plantago media	Hoary plantain	2.00			
Primula veris	Cowslip	2.00			
Prunella vulgaris	Selfheal	0.40			
Ranunculus acris	Meadow Buttercup	0.40			
Ranunculus bulbosus	Bulbous buttercup	1.60			
Trifolium repens	White clover	4.00			
	Total	**20**			

5.2.4 Planting Implementation: The key to creating sustainable, species-rich grasslands is to begin with a nutrient-poor base and then manage the land correctly.

Species-rich grasslands require much less management than amenity grassland. As they only require mowing twice a year, they will save a considerable amount of money in the long term.

It is recommended that the grassland planting is implemented after the completion of the development.

© JCA Limited 2024

- **Ground Preparation**:
  Bare soil: If the area of ground to be converted into species-rich grassland is bare, then the following instructions should be implemented: At most sites, it is likely that the soil will have at one point been fertilised. To reduce fertility, remove the top 15 to 20 cm of topsoil to reveal the nutrient-poor subsoil. The nutrient rich topsoil should then be relocated elsewhere on site, i.e. in the garden spaces and shrub beds. Alternatively, a layer of the unearthed subsoil can be excavated and placed over the topsoil. This method will inhibit the growth of any weeds present in the topsoil. Another option is to dilute the topsoil by mixing in poor quality material such as crushed builders' rubble or spoil. Then, using a fork, break up the soil and rake the proposed seedbed to produce a fine, firm tilth. Remove any large stones and root fragments.

  Existing Grassland: If the area of ground to be converted into species-rich grassland is an existing area of grassland, then the following instructions should be implemented: During the autumn (September / October) cut the grass very short and rake the land over vigorously to create patches of bare ground. When the lawn is cut, the cuttings must be removed from the site to prevent the nutrients being returned.

- **Sowing**: The seed mix should be sown during early autumn (late August/ September). The seeds should be sown sparsely, at a rate of 2 to 5 grams per square metre. Mix the seed with damp sand or sawdust in a ratio of 1 to 3 in order to ensure the seeds are evenly distributed across the seedbed. Scatter the seed by hand, gently rake over and then lightly roll or tread the ground to settle the seeds in the soil.

- **Management**: Following sowing, remove any annual and perennial weeds that appear. The grassland should remain nutrient poor, therefore, do **not** add fertilisers at any point. The grassland should be cut only twice a year; once in the spring (early March to early April) and once in the autumn (late June to the end of August). Always remove the cuttings to prevent nutrients returning to the soil. **Never** cut the meadow shorter than 5cm. This cutting regime will prevent the grassland from succeeding in to scrub and woodland, whilst allowing the flowers to set seed for the following year, thus producing a sustainable and viable habitat. If after 2 years the grassland remains species poor, the land should be prepared in the method described above in *Existing Grassland* and the seed mix re-sown.

5.3 Hedgerow Planting

5.3.1 Incorporating an area of shrubs or by planting border hedges, rather than a fence of wall, will benefit a range of species by providing additional habitats for invertebrates, nesting opportunities for birds, and resting/commuting opportunities for hedgehogs.

© JCA Limited 2024

5.3.2 Species Selection: The species have been selected for their hardiness, amenity value and their value to local wildlife, either in the form of flowers, berries, seeds or shelter. Species that are poisonous such as Spindle have been avoided.

5.3.3 Hedgerow Specifications: For a hedgerow, shrubs should be planted every 30cm in a double staggered row. The following table gives examples of native species that would be suitable for creating a shrub patch or hedgerow.

Table 4: Recommended species for native shrub/hedgerows.

Botanical Name	Common Name	Size at Purchase
Buxus sempervirens	Common box	80-100cm
Cornus sanguinea	Dogwood	80-100cm
Corylus avellana	Hazel	80-100cm
Crataegus monogyna	Hawthorn	80-100cm
Ilex aquifolium	Holly	80-100cm
Prunus spinosa	Blackthorn	80-100cm
Viburnum opulus	Guelder Rose	80-100cm

5.3.4 Shrub Planting Implementation: Recommendations for good shrub planting practice are given below:

- **Site Preparation**: It is recommended that the shrub planting scheme is implemented after the completion of the development. The shrub beds must be installed before the shrubs are planted, care should be taken during development to ensure that soils within these beds are not contaminated with cement or other building materials.

  Loosen the soil to eliminate compaction and improve drainage. If the existing topsoil is of poor quality, a fertile, freely draining soil with neutral or slightly acidic pH should be imported.

- **Planting Hole:** A planting hole will be excavated to around two and three times the diameter of the rootball and no deeper than the roots. The sides and bottom of the hole should be roughened with the spade or fork. Soil amendments such as compost should **not** be added as this has been shown to be detrimental to successful establishment.

- **Planting**: The top layers of compost should be scraped away when planting container grown plants, with the point where the roots flare out being near the soil surface. Place the shrub in the centre of the hole and carefully refill ensuring soil is positioned between and around all of the roots in order to eliminate any and all air pockets. Firm the soil around the shrub gently, avoiding compacting the soil.
- **Mulching**: Woodchip mulch should be applied around the base of each shrub to a depth of no more than 75mm. This will conserve water close to the soil surface and inhibit weed growth.

© JCA Limited 2024

- **Timing**: Planting should be carried out during the dormancy period for deciduous species (November to February).
- **Positioning**: Whips within the hedgerow scheme should be planted in two staggered lines, **30cm** apart, and distributed evenly.
- **Management**: Hedgerows should be cut only once every two to three years, **not** annually. Cutting annually will prevent hedgerow species from flowering and fruiting, thus reducing their wildlife benefit. The best time to cut hedgerows is during late winter.

5.4 Tree Planting

5.4.1 Tree planting will benefit a range of species by providing additional habitats for invertebrates, nesting opportunities for birds, and providing forage in the form of berries and fruit (dependant on tree species).

5.4.2 Species Selection: The recommended species are all UK natives with attractive autumnal colours, berries, flowers, interesting bark and leaves and as such, the site should be attractive throughout the seasons for both residents and wildlife. The species selected have a range of life expectancies in order to provide the site with long term tree cover. Poisonous species have been avoided, as have species which commonly drop branches. Where appropriate trees have been planted in order to provide useful screening.

5.4.3 Tree Specifications:

Trees should be container-grown and selected according to guidelines BS: 3936: Part 1: 1992 - Nursery Stock. This will ensure that they are of good form and in healthy condition. Trees have been positioned where they will provide the highest amenity possible, and are unlikely to conflict with other trees or structures as they attain their mature height and spread.

The following table lists recommended native tree species that would be suitable for a garden. Consideration is given to availability, immediate impact, ease of installation and likelihood of successful establishment.

Table 5: Recommended species of native deciduous trees.

Botanical Name	Common Name	Size at Purchase
Betula pendula	Silver birch	Standard
Malnus sylvestris	Crab apple	Standard
Prunus avium	Wild cherry	Standard
Prunis padus	Bird cherry	Standard
Sorbus aucuparia	Rowan	Standard

© JCA Limited 2024

5.4.4 Tree Planting Implementation: Recommendations for good tree planting practice are given below:

- **Site Preparation:** It is recommended that the tree planting scheme is implemented after the completion of the development. This will avoid damage to new trees from construction hazards such as re-grading of soils near roots and mechanical damage to tree crowns.

- **Planting Hole:** A planting hole will be excavated by hand and will be twice the diameter of the rootball and of equal depth. The sides of the hole should be roughened with the spade. The new tree should be offered into the hole and backfilled using the original soil material. Soil amendments such as compost should not be added as this has been shown to be detrimental to successful establishment.

- **Staking**: Staking will be required in order to secure the tree and prevent losses within the first years of establishment. It may be necessary to angle the stakes in order to avoid damaging the rootball. All trees are to be staked at a height of no more than 1 metre.

- **Tree Ties**: Adjustable and flexible tree ties will be used. These are to be attached at a point no more than one third of the way up the stem. Ties should be inspected after one year and adjusted as required. Only if establishment is particularly slow should stakes remain in place longer than three growing seasons.

- **Mulching**: Woodchip mulch should be applied around the base of each tree to a depth of no more than 75mm. This will conserve water close to the soil surface and inhibit weed growth.

- **Timing**: Planting should be carried out during the dormancy period for deciduous species (November to February).

- **Tree Guards**: Spiral type guards are to be incorporated around the base of each stem in order to reduce pest damage throughout the winter months and to prevent mechanical damage from strimmers and mowers.

- **Future work**: After completing any future tree works such as pruning or felling, all deadwood should be retained on site and created into log piles in suitable and sheltered positions. This will then provide habitat for flora and fauna such as fungus, invertebrates, reptiles and amphibians.

5.5 Aftercare

5.5.1 All newly planted trees and shrub beds are to be thoroughly watered immediately after planting and during any prolonged periods of dry weather.

© JCA Limited 2024

5.5.2 Once planted, trees and shrubs should be inspected on an annual basis for signs of poor condition or damage. Any trees or shrubs that die within the first 5 years after planting will be replaced.

5.5.3 Trees and shrubs in public open spaces will be the responsibility of the managing agent for the site whether it is a private company contracted to do the work or the Local Authority. All tree and shrub works should be completed outside of the breeding bird period (1st Feb-31st Aug).

5.5.4 Any weeds found growing around the newly planted trees and shrubs should be removed annually in subsequent years after planting. This will ensure the uptake of valuable resources such as water, nutrients and light. This should be done manually without the use of herbicides.

5.5.5 Tree ties should be inspected annually and adjusted if required. Tree ties and stakes should be removed within three years of planting unless establishment is deemed to be unusually slow.

5.5.6 New bark mulch should be applied around the base of each tree to a depth of no more than 75mm each year for at least the first three years. This will conserve water close to the soil surface and inhibit weed growth.

© JCA Limited 2024

6 Faunal Boxes

6.1 Summary

6.1.1 In total **2** bat bricks/boxes, **2** bird boxes, **1** hedgehog shelters and **1** insect box have been recommended.

6.2 Bat Roosting Opportunities

6.2.1 All British bat species are protected by UK legislation. This is in response to the declines experienced by many bat species over the past century. The cause of the decline could be linked to a number of factors, including habitat loss, pesticide over-use, habitat fragmentation, loss of roost sites and roost disturbance.

6.2.2 The desktop study conducted as part of the PEA (21434/ADo) identified at least **four** bat species within 2km of the site in the 10 years prior to that report, and **29** roosts within 2km of the site, summarised in **Tables 6 and 7**.

6.2.3 All bat species are European Protected Species (EPS) under **Schedule 2** of the **Conservation of Habitats and Species Regulations (CHSR) 2017** (retained in UK law by **CHSR (Amendment) (EU Exit) 2019**), with additional protections under **Schedules 5 and 6** of the **Wildlife & Countryside Act (WCA) 1981 (as amended)**. Additionally, six species (including soprano pipistrelles and noctules) are priority species under **Section 41** (**S41**) of the **Natural Environment & Rural Communities (NERC) Act 2006**, designating them as species of principal importance for the purpose of conserving biodiversity.

Table 6: Summary of bat activity records adapted from PEA (21434/ADo).

Scientific name	Common name	Number of records	Most recent record	Closest distance from site (m)
Myotis daubentonii	Daubenton's bat	1	2015	1498
Nyctalus noctula	Noctule bat	2	2020	1137
Pipistrellus pipistrellus	Common pipistrelle	10	2021	578
Pipistrellus pygmaeus	Soprano pipistrelle	4	2021	790

Table 7: Summary of bat roost records adapted from PEA (21434/ADo).

Scientific name	Common name	Number of records	Most recent record	Closest distance from site (m)
Myotis daubentonii	Daubenton's bat	1	2009	1272
Pipistrellus pipistrellus	Common pipistrelle	16 – including 1 maternity roost	2021	572
Pipistrellus sp.	Unidentified pipistrelle	3 – including 1 maternity roost	2007	1559
Vespertilionidae	Unidentified Vesper bat	9	2007	830

© JCA Limited 2024

6.2.4 Pipistrelles typically roost within structures, but also use tree holes and crevices, whereas noctules are primarily tree roosting species. Therefore, the types of bat boxes recommended for the Proposed Development will provide roosting opportunities for a range of bat species.

6.2.5 Box Selection & Positioning: There is a wide range of different bat boxes available, including both internal and external designs. External designs include the traditional wooden and woodcrete boxes. Internal designs include boxes that can be built into the walls, with a front that mimics the brickwork of the building, essentially becoming invisible. Other roost opportunities include cutting slots into soffit boxes, using bat bricks that lead into cavity walls and using lifted tiles to allow access into the loft.

6.2.6 **Bat bricks** (on buildings) have been selected to incorporate into the new building. The bricks are positioned high on the walls of the building, and the gap within the brick is only a few centimetres wide. These gaps are often overlooked by residents and so should not cause conflict with buyers. Bat bricks should be placed under the eaves at the apex of the **south** facing walls. These bricks will then allow bats to access the cavity wall spaces.

6.2.7 **Bat Boxes** (on trees) should be positioned at least 5m high, with their front facing **south**. The selected boxes should be constructed of woodcrete or similar in order increase their life expectancy. A range of different designs should be selected in order to increase the likelihood of bats roosting within the site.

6.2.8 The specifications of all bat bricks/boxes recommended to be installed onsite post-development are detailed below in the table below.

Table 8: Bat roosting opportunities to be installed as part of the Proposed Development.

Bat Brick/Box	Number to be Installed	Description	Details
Ibstock Enclosed Bat Box 'C' (or a comparable design) 	1 (on the proposed building)	The Enclosed Bat Box 'C' from Ibstock is designed for the pipistrelle bat. It is ideal for new builds as it can be integrated directly into the brickwork to produce a discrete but attractive home for bats. The inside of the box is designed to create several roosting zones which are ideal for crevice dwelling bats. The bottom entrance means that no maintenance is required as droppings will simply fall out the bottom. This Ibstock Bat Box C is available in two sizes and three colours (red, blue or cream). The box is both durable and fully frost resistant.	Dimensions Large Box Height: 290mm Width: 215mm Depth: 105mm Weight: 9.2kg

© JCA Limited 2024

1FD Schwegler Bat Box (or a comparable design) 	1 (on tree)	The Schwegler 1FD has been developed specifically for smaller bats as both the interior and the type and size of the entrance hole match the requirements of smaller species. It features a special layout inside, such as a domed roof, an increased interior height and two grooved internal wooden front panels with precise spacing between them. This model has proved highly effective as a nursing area. The front panel can be removed for cleaning and inspection. This box is designed to be sited on trees using the galvanised steel hanger and aluminium nail provided. Schwegler bat boxes are backed by conservation organisations, government agencies and forestry experts and have the highest occupation rates of all nest boxes. They are carefully designed to mimic natural roost sites and to provide a stable environment.	Dimensions Height: 360mm Diameter: 160mm Weight: 4.8kg

6.3 Bird Boxes

6.3.1 In the UK there are approximately 600 species of bird, each occupying a different habitat and present in a different region of the country. Many birds regularly visit gardens and will quickly adopt to new nest boxes, but only when the right box design is selected and situated correctly. Each species prefers a specific nest box design, with different dimensions and hole sizes.

6.3.2 Several species that commonly visit urban gardens had records returned during the PEA desk study (21434/ADo), including swift, dunnock, and house sparrow. Therefore, the types of bird boxes recommended for the Proposed Development will provide nesting opportunities for a range of other bird species.

6.3.3 The specifications of all bird boxes recommended to be installed onsite post-development are detailed below in the table below.

© JCA Limited 2024

Table 9: Bird nesting opportunities to be installed as part of the Proposed Development.

Bird Box	Number to be Installed	Description	Details
Vivara Pro WoodStone Swift Nest Box (or comparable design)	1 (on the proposed building)	Swifts in the UK have been declining rapidly over the past decades and it is thought that the destruction of suitable nesting habitat is a core reason for this decline. Installing a swift box is a great way to help these birds and to ensure their continued presence in our surroundings. The FSC certified woodstone swift nest box is constructed entirely out of woodstone meaning it is long lasting and won't rot away like a traditional wooden nest box. There is an opening at the back of the box for easy cleaning with the nest entrance on the underside of the box. This type of entrance is preferred by swifts but discourages house sparrows and starlings from occupying the box. This box should be installed at least 5m above the ground, ensuring that there is unobstructed access for birds entering and leaving. If possible, boxes should be sited under the shelter of eaves or overhanging roofs.	Dimensions Length: 245mm Width: 380mm Depth: 265mm Weight: 600g
Vivara Pro Seville 32mm WoodStone Nest Box (or comparable design)	1 (on tree within existing treeline)	Unlike a traditional wooden nest box, these boxes will not rot away or deteriorate and are guaranteed for 10 years. This robust material safeguards against attacks from predators such as woodpeckers, cats and squirrels, whilst also providing a well-insulated interior with a consistent internal temperature (important for breeding). These 32mm hole nest boxes are suitable for blue tits, tree sparrows, house sparrows, great tits, blue tits, nuthatches, coal tits and pied flycatchers and they are available in brown, green or grey to complement both natural woodland and garden settings.	Dimensions Height: 310mm Width: 200mm Length: 200mm Weight: 6.9kg Entrance hole diameter: 32mm

6.3.4 Bird boxes on **buildings** should be securely fastened below the eaves, at least 4m above ground level (to prevent predation by cats). Boxes should be positioned so that the front is facing in an **easterly** direction, as to avoid direct heat of the sun and prevailing wind and rain.

6.3.5 Bird boxes on **trees** should be installed facing in a **northerly** to **easterly** direction, thus avoiding strong sunlight and wet winds. Boxes should be

© JCA Limited 2024

installed as to ensure birds have a clear flight path to the bird box without any clutter directly in front of the entrance.

6.3.6 The installation of all bird boxes is to be undertaken immediately after the completion of the Proposed Development.

6.4 Insect Boxes

6.4.1 Insects are the primary food source for many of the rare or protected animals that regularly visit gardens. Thus, encouraging insects into a site will then attract rare and/or predators, such as birds and bats.

6.4.2 Many insect species will hibernate over winter in their adult state, such as butterflies, ladybirds and lacewings. In nature, these insects would hibernate within features such as leaf litter or other plant debris. However, gardeners tend to over-maintain their gardens, often tidying these features away in the autumn. Therefore, these species can be encouraged to stay at the site all year round by erecting suitably designed boxes (Kirby 2003).

6.4.3 To ensure the Site maintains its' value for invertebrates**, one** insect tower should be placed attached to a suitable fence, post, or other structure. A suitable insect tower design can be seen below in **Figure 1**.

Figure 1: Example of an Insect Tower (can be purchased or created through own design).

6.5 Hedgehog Shelters

6.5.1 Hedgehog numbers have declined by 90% over the past 50 years due to a number of factors including habitat loss, fragmentation and parasites. Providing shelter and a means of dispersal in gardens will encourage hedgehogs to visit the site and utilise the natural space.

6.5.2 Hedgehog shelters are simple to construct. Situate in a quiet corner of a garden, preferably under vegetation. Dried leaves or hay are placed inside for bedding (Bunnell, 2014).

6.5.3 Access to gardens has become increasingly limited for hedgehogs, as fences and walls block their dispersal. A simple solution is to create a 13x13cm access hole at ground level into fences in each garden to allow hedgehogs to freely move between green spaces (Bunnell 2014).

6.5.4 Providing shelter for hedgehogs within green spaces will encourage this species to visit the Site and utilise the natural space. Therefore, **one** hedgehog shelters should be placed in a sheltered position.

6.5.5 Hedgehog shelters are simple to construct and should be situated in a sheltered, undisturbed area preferably under vegetation with dried leaves or hay placed inside for bedding (Bunnell, 2014). An example of a hedgehog shelter is shown below in **Figure 2.**

Figure 2: Example of hedgehog shelter *in-situ.*

7 Ecological Recommendations

7.1 Lighting

Lighting Scheme: The development will likely increase lighting levels. All lighting must consider wildlife and be in accordance with the Institution of Lighting Professionals (ILP) Guidance Notice GN01 (2021) and GN08 (2023). A key point is the avoidance of internal and external light spill. Where possible, lighting should be timed, or on sensors and avoid the hours between sunset and sunrise, when bats are out foraging.

Artificial light is known to deter bats from entering lit areas. The development must incorporate a wildlife sensitive lighting scheme. In particular, obtrusive light is to be prevented from reaching potential foraging and commuting routes, both from new exterior and interior lights. GN08 is to be followed when designing the lighting scheme for the development.

It is important to avoid:

- Uniform levels of luminance across the site.
- Metal halide and florescent lighting.
- Upward tilting lighting that increases skyline luminance.

Instead, the following should be installed:

- Dark buffer zones.
- Screening in the form of vegetation, fences and structures.
- Appropriately designated darkened areas.
- Luminaries absent of UV elements.
- LED luminaries with a sharp cut-off, low intensity and good rendition.
- A warm white spectrum (<2700 kelvin) to reduce blue light.
- Peak luminaire wavelength at a minimum of 550nm.
- Downward directional luminaires with upward light ratios of 0%.
- Lower light columns to limit light spill.
- Recessed internal light fixtures.
- Window glazing treatments or automated blind systems.

7.2 Vegetation removal

Any vegetation removal should ideally take place outside of the bird nesting season (1st Feb-31st Aug). If works occur within this time, a preconstruction site walkover by a suitably competent ecologist should occur no more than **24 hours** prior to any vegetation removal and works is required. The ecologist will inspect any

© JCA Limited 2024

trees/vegetation to be removed or adjacent to any construction for evidence of nesting birds.

The site has the potential to support nesting, sheltering and foraging amphibians, reptiles, and hedgehogs. All native reptiles are protected under WCA Schedule 5. Great crested newts are an EPS, protected under CHSR 2019 Schedule 2, with additional protections under WCA Schedule 5. Hedgehogs are protected under WCA Schedule 6, with additional protection during hibernation and while raising their young. Clearance of the site must take place under the supervision of an **Ecological Clerk of Works (ECoW)**. The **ECoW** will conduct a fingertip search of the areas to be cleared and, should any hedgehogs or reptiles be found, they will move the animal to a safe place containing suitable habitat for the species.

© JCA Limited 2024

8 Conclusion

8.1.1 As per the BS 42020 (BSI, 2013) developments should following the mitigation hierarchy, thereby retaining habitats as the first option, minimising impact as the second and, if these options are not available, providing compensatory measures.

8.1.2 The site contains areas of modified grassland that will be partially removed as part of the proposed development.

8.1.3 It is recommended to create areas of wildflower grassland, planting of shrubs/hedgerows, and planting of native trees. The habitats should contain plant species to encourage biodiversity, particularly those that will attract food insects for bats (as advised in Encouraging Bats).

8.1.4 The site has the potential to support protected or notable species: bats, nesting birds, and hedgehogs, as well as a range of invertebrate species that will act as a food source and provide pollination services. As a result, it is recommended that **two** bat bricks/boxes should be positioned around the site, within the new building and on suitably sized trees. **Two** bird boxes, including designs aimed at supporting a range of bird species, are to be installed onto the building, or on suitably sized trees. **One** mixed insect box aimed at attracting invertebrates are to be installed around the site. **One** hedgehog shelter is to be installed.

8.1.5 Monitoring of faunal boxes and wildlife features over a 5-year period is recommended. Monitoring is key to understanding how habitat and wildlife features are being used by wildlife on site after the development. Without monitoring, and effective and adaptive management a scheme can't be maintained and revised.

8.1.6 It is recommended that a full management plan is created to inform people what is required on site to maintain biodiversity.

© JCA Limited 2024

9 References

Previous reports:

JCA Ltd. – Preliminary Ecological Appraisal (PEA), Nov 2023 (21434/ADo).

JCA Ltd. – Biodiversity Accounting Assessment (BAA), Jun 2024 (21434a/ADo).

JCA Ltd. – Invasive Species Method Statement, Sep 2024 (21434d/ADo).

Guidance:

Ausden, M. (2007) *Habitat management for conservation: A handbook of techniques*. Oxford, United Kingdom: Oxford University Press, USA.

Bat Mitigation Guidelines (Jan. 2004). A. J. Mittchell-Jones. English Nature.

Bat Survey Guidelines: Good Practice Guidelines, 4th ed. Collins (2023). Bat Conservation Trust (BCT).

Bat Workers Manual (3rd Edition 2004). A. J. Mitchell-Jones & A. P. McLeish. Joint Nature Conservation Committee (JNCC).

Bunnell, T. (2014) *The disappearing Hedgehog*. United Kingdom: Independent Publishing Network.

Institute of Lighting Professionals (2021) Guidance Note 01/21: The Reduction of Obtrusive Light. ILP, Rugby

Institute of Lighting Professionals and Bat Conservation Trust (2023) *Guidance Note 08/23: Bats and artificial lighting in the UK. ILP, Rugby*

Kirby, P. (2013) *Habitat management for invertebrates: A practical handbook*. Exeter: Pelagic Publishing.

Perrow, M.R. (2008) *Handbook of ecological restoration: Volume 1, principles of restoration: V. 1: Principles of restoration*. Edited by Martin R. Perrow and Anthony J. Davy. Cambridge, United Kingdom: Cambridge University Press.

Relevant Legislation and Government guidance:

Environment Act 2021

- https://www.legislation.gov.uk/ukpga/2021/30/contents/enacted

Wildlife and Countryside Act 1981

- http://jncc.defra.gov.uk/page-3614
- https://www.legislation.gov.uk/ukpga/1981/69/contents

The Conservation of Habitats and Regulations 2017.

- https://www.legislation.gov.uk/uksi/2017/1012/contents/made

The Conservation of Habitats and Species (Amendment) (EU Exit) Regulations 2019

- https://www.legislation.gov.uk/uksi/2019/579/contents/made

Natural Environment and Rural Communities Act 2006

- https://www.legislation.gov.uk/ukpga/2006/16/contents

Protection of Badgers Act 1992

- https://www.legislation.gov.uk/ukpga/1992/51/contents

Countryside and Rights of Way Act 2000

© JCA Limited 2024

- https://www.legislation.gov.uk/ukpga/2000/37/contents

The Hedgerows Regulations 1997

- https://www.legislation.gov.uk/uksi/1997/1160/contents/made

Council Directive 92/43/EEC

- https://www.legislation.gov.uk/eudr/1992/43/contents

Nation Planning Policy Framework

- https://www.gov.uk/government/publications/national-planning-policy-framework--2

Natural Environment guidance

- https://www.gov.uk/guidance/natural-environment

© JCA Limited 2024

Appendices

Appendix 1: Proposed Development

© JCA Limited 2024

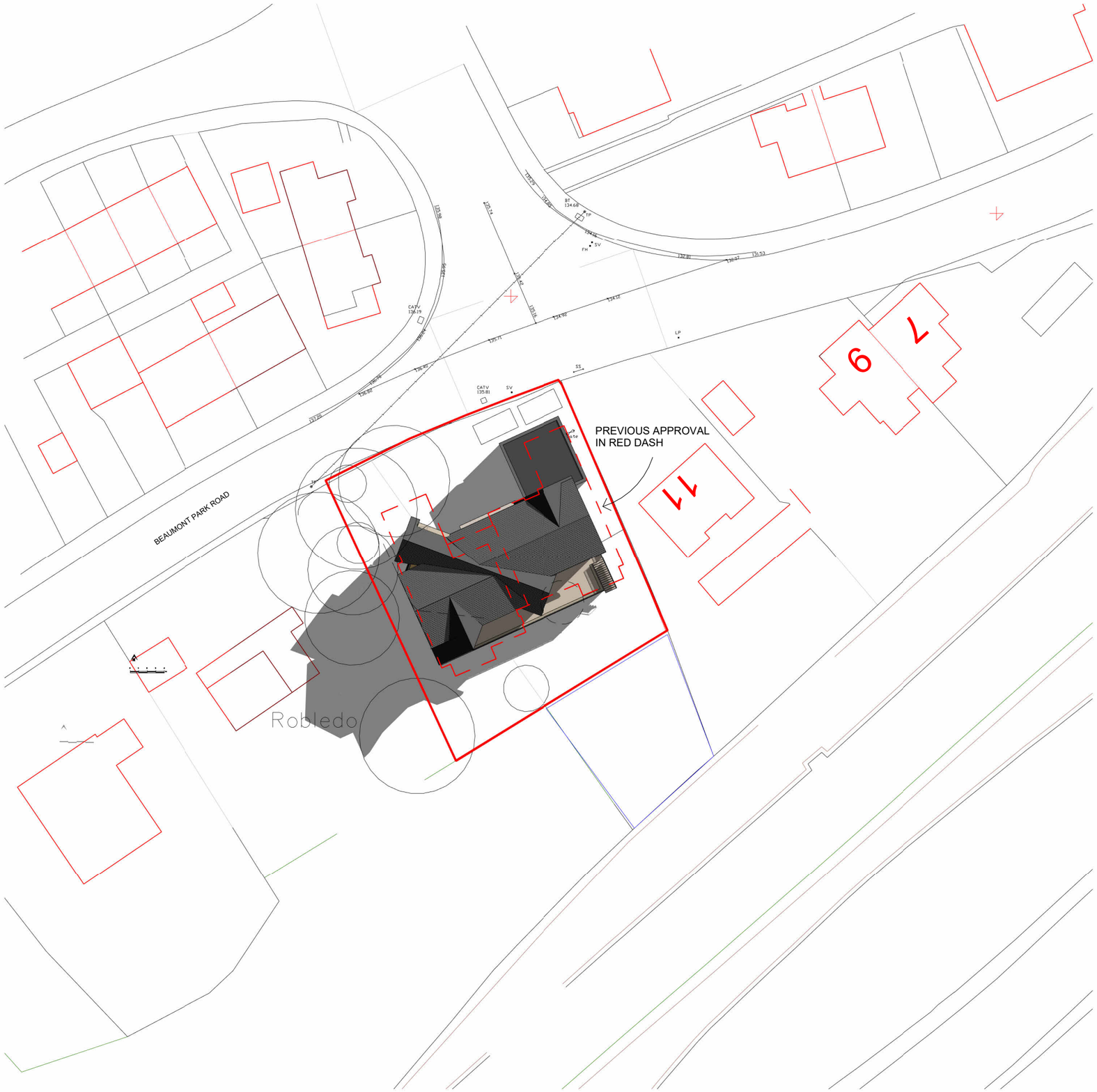

Only figured dimensions should be used.

Scaled dimensions should be checked with the Architect.

This drawing together with the design, is the property and copyright of the Architect and must not be reproduced without written permission

rev	description	drwn	auth	date

DO NOT SCALE OFF THIS DRAWING

ACUMEN
Designers & Architects
acumenarchitects.co.uk 01484 546 000
Headrow House, Old Leeds Road, Huddersfield, Huddersfield HD1 1SG

Client
MR M BAINS

Project
LAND OFF BEAUMONT PARK RD

Project No	Drawing No	Rev
2853	(SK)03	

Description
SITE PLAN

Scale	Date Drawn	Drawn By	Authorised By
1 : 500 @ A3	JUN 22	HB	JC

Purpose of Issue
Planning ● Building Regs ○ Tender ○ Construction ○ Comment ○ Info ○

Appendix 2: Examples Artificial Bat Box Designs

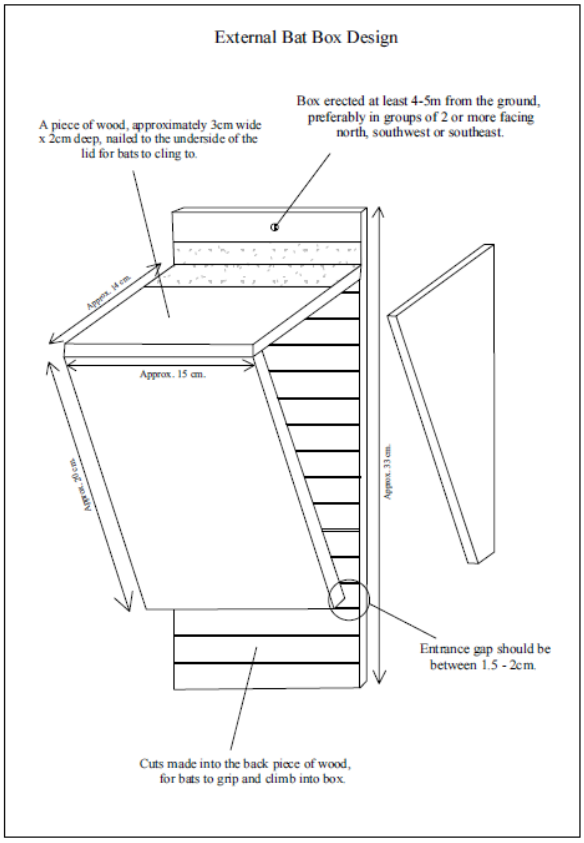

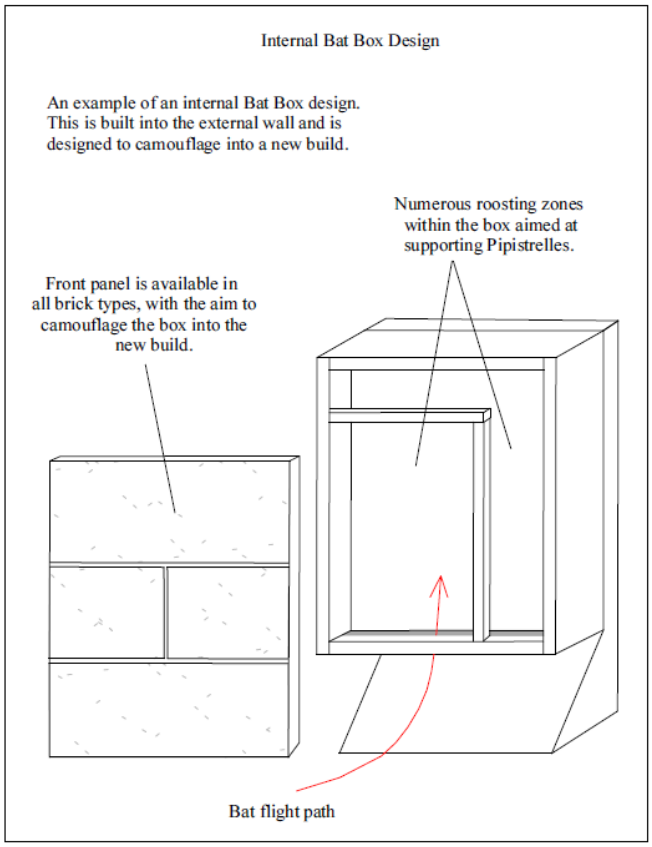

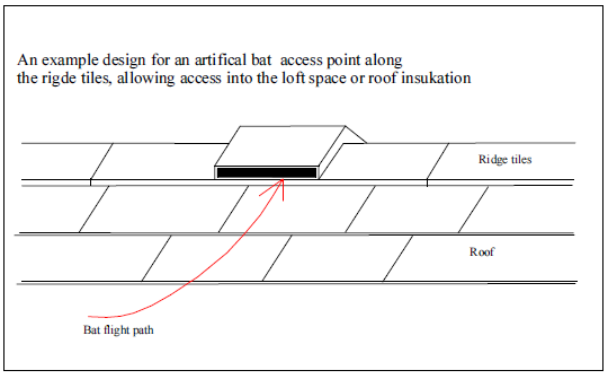

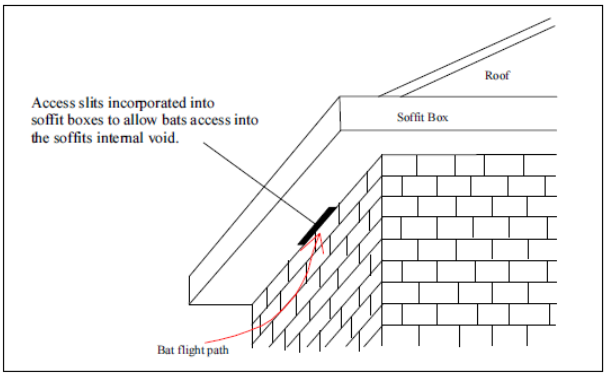

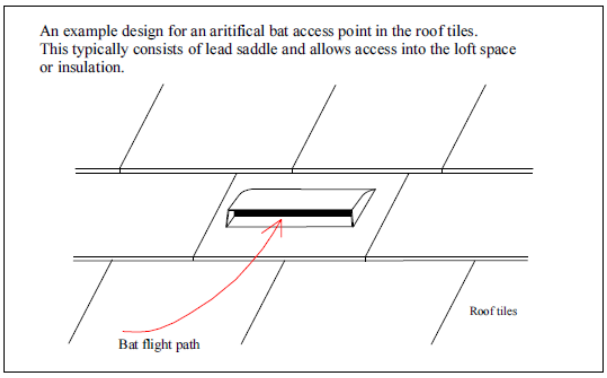

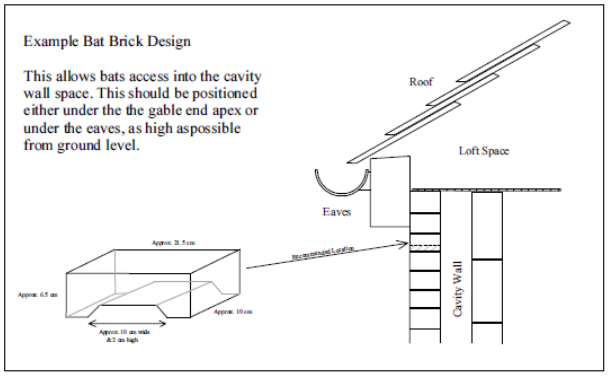

Appendix 3: Examples Artificial Bird Box Designs

An example of two different bird box designs

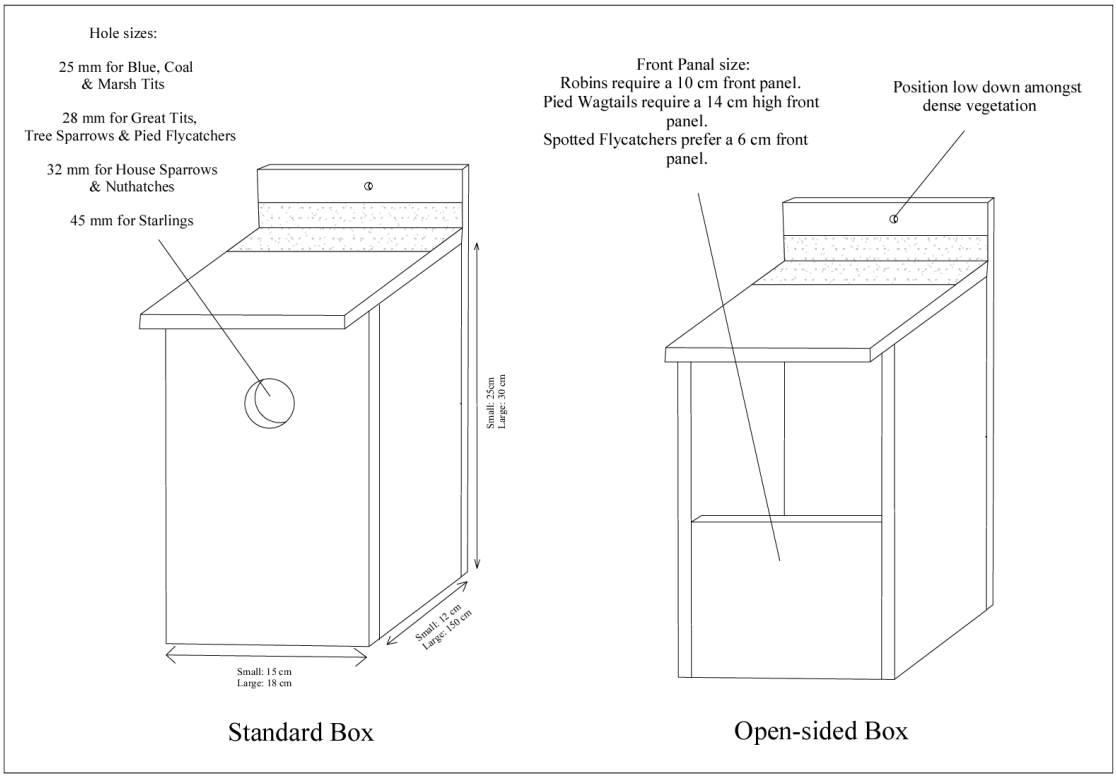

An example of a House sparrow box design

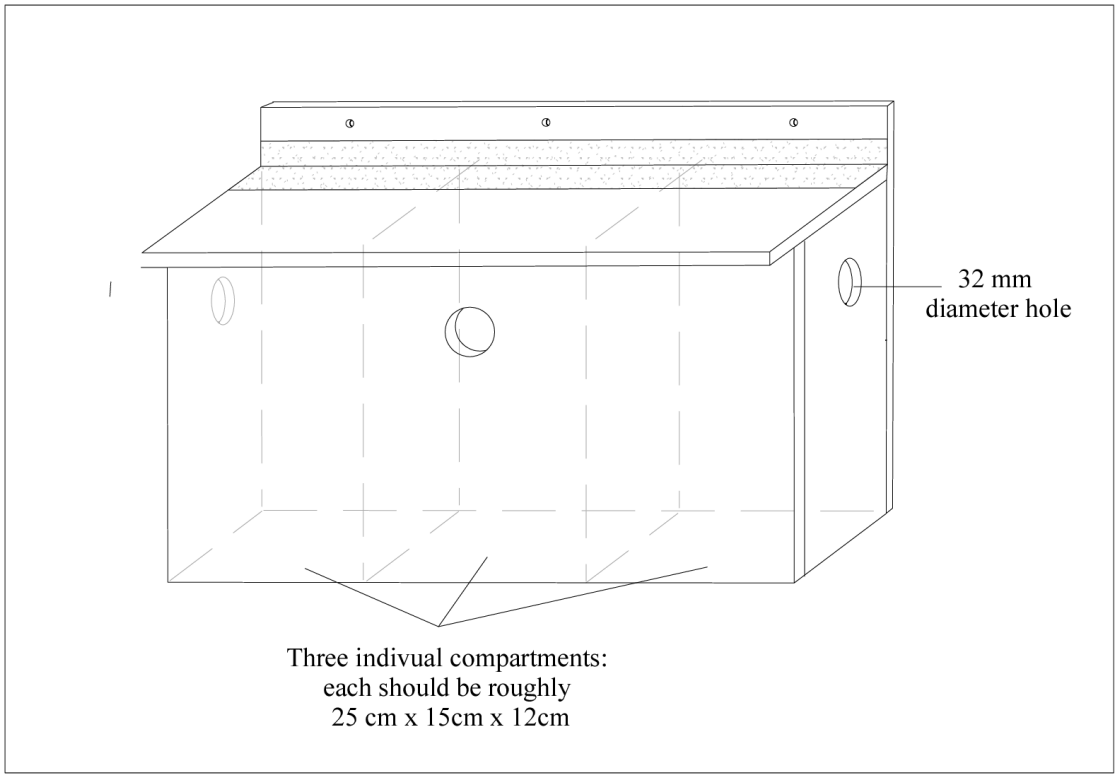

Appendix 4: Examples of Insect Shelter Designs

An example of two different insect box designs

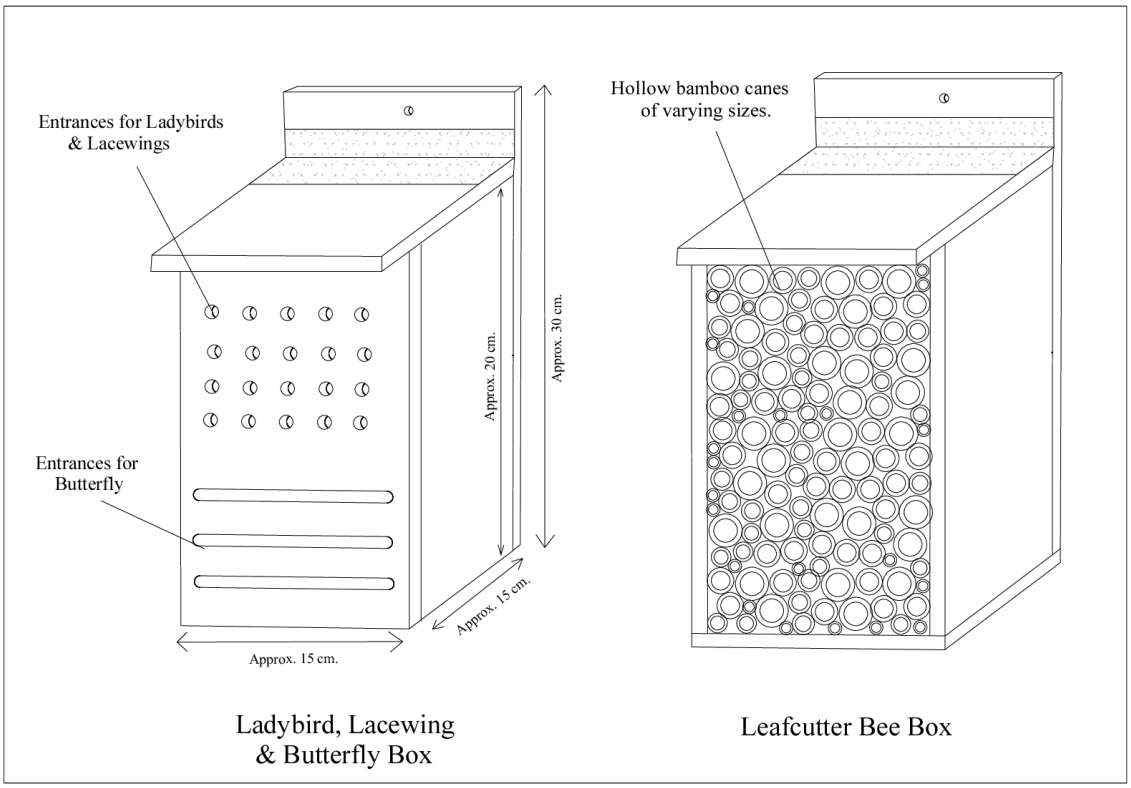

An example of a Bumblebee box design

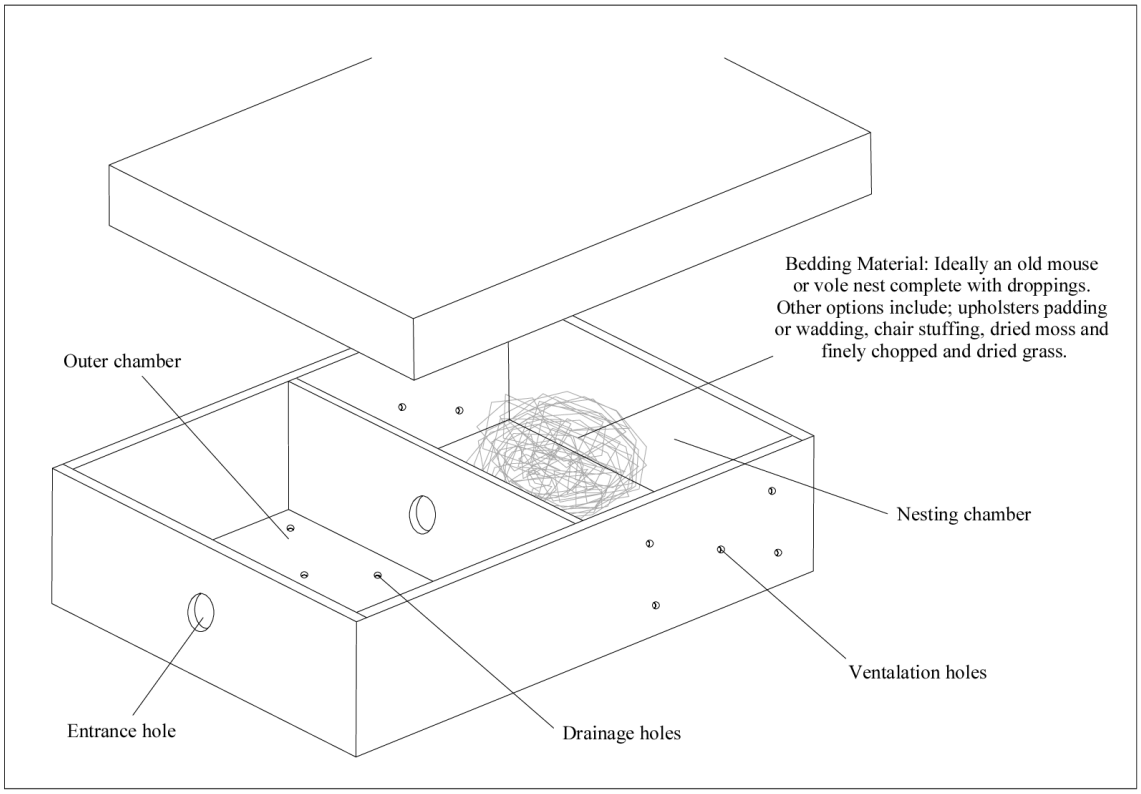

© JCA Limited 2024

Appendix 5: Example of Hedgehog Shelter Design

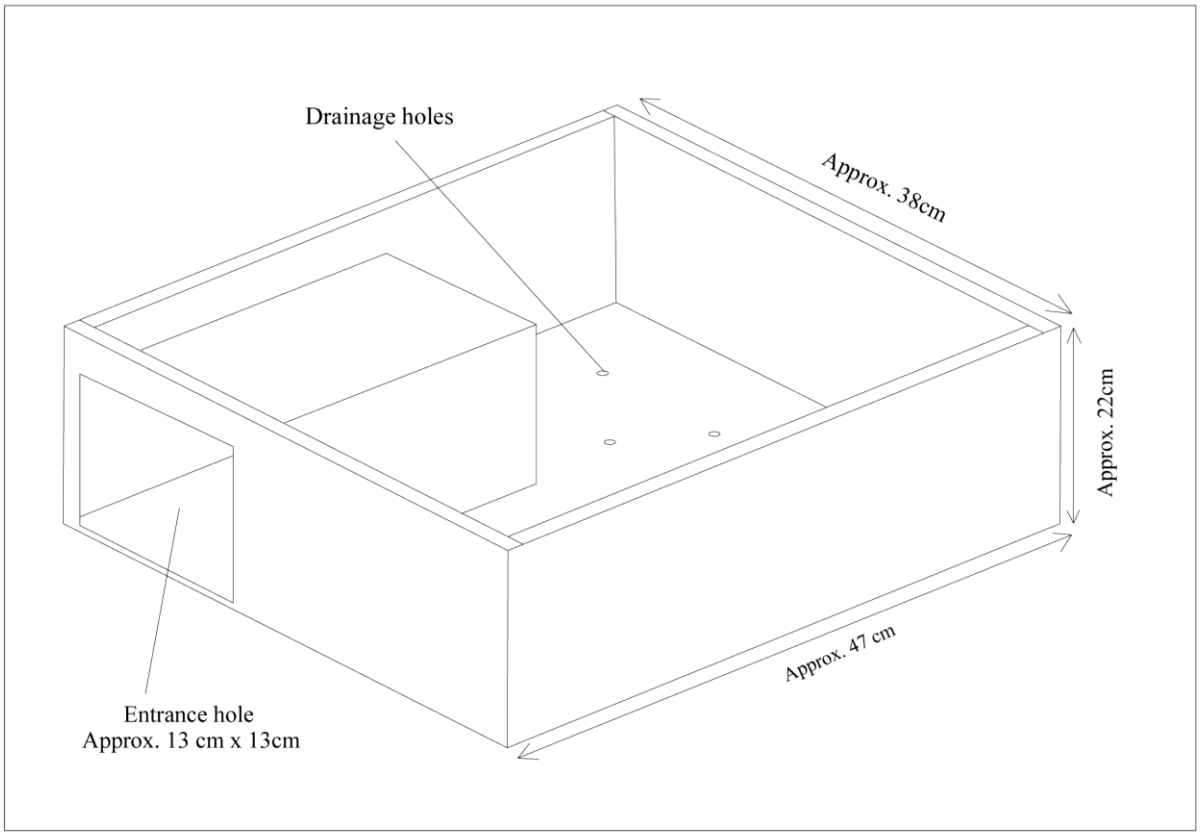

Appendix 6: Example of planting a tree in an open grass strip

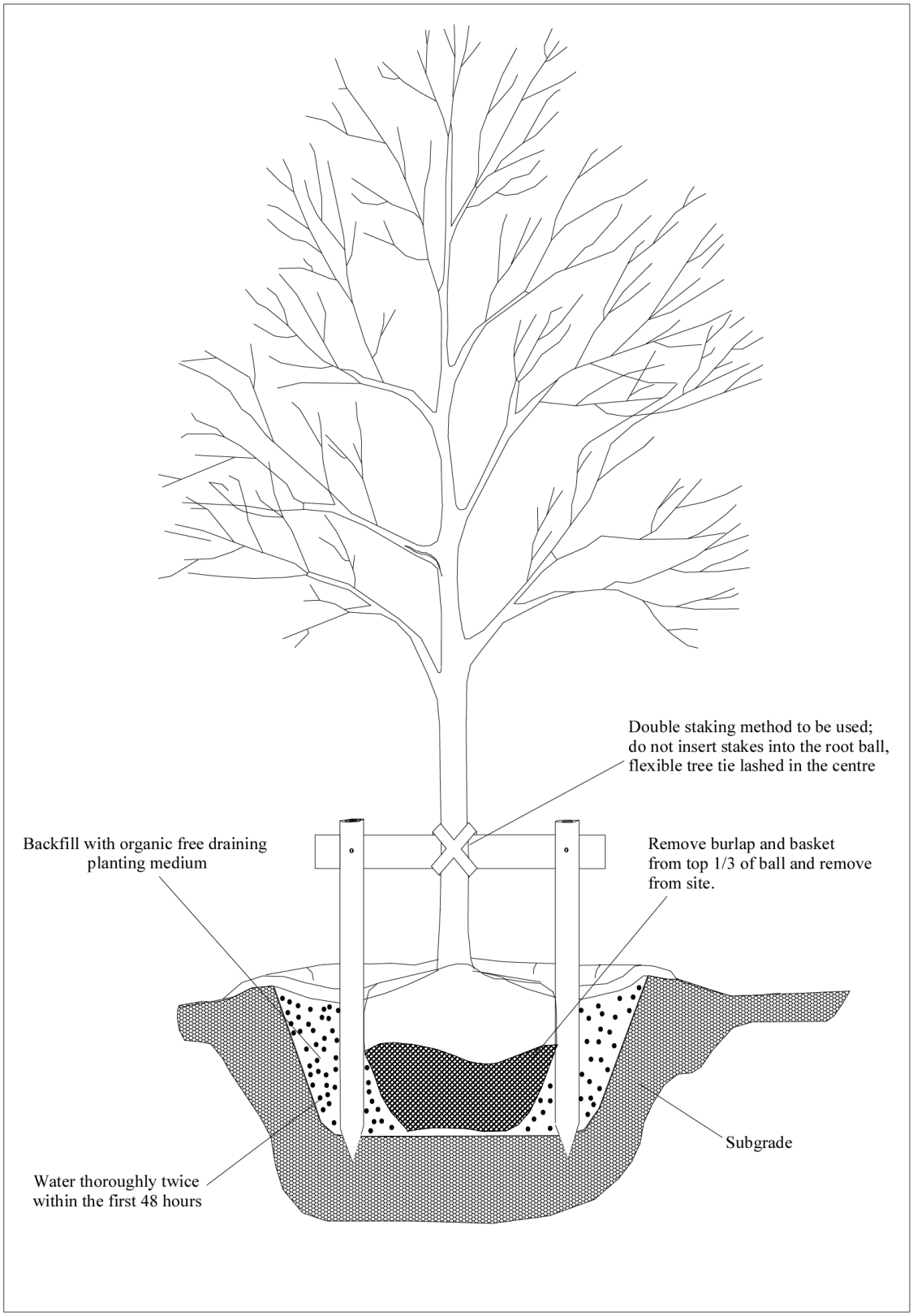

© JCA Limited 2024

Appendix 7: Example of planting a tree within a street

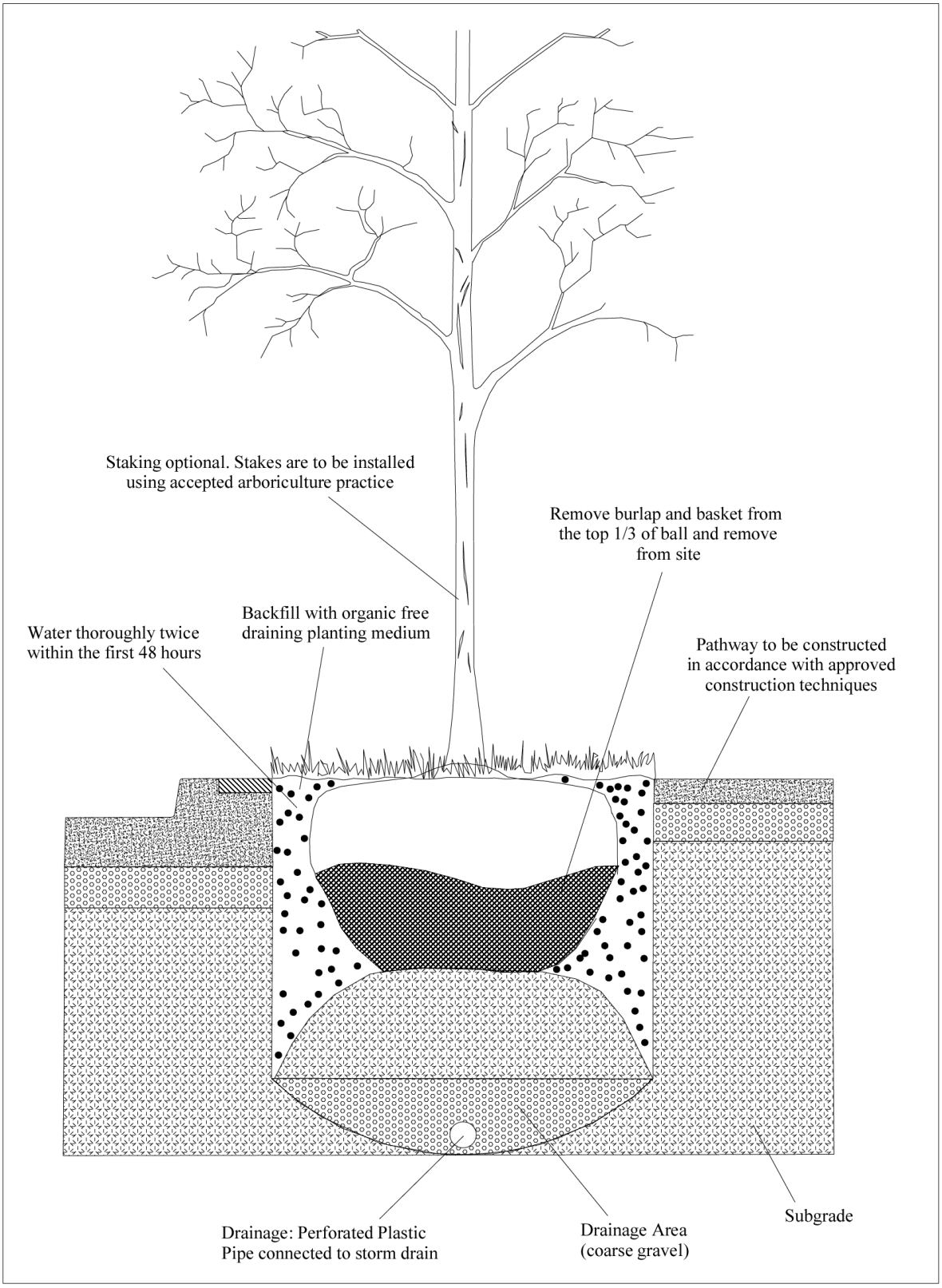

Appendix 8: Example of planting a tree

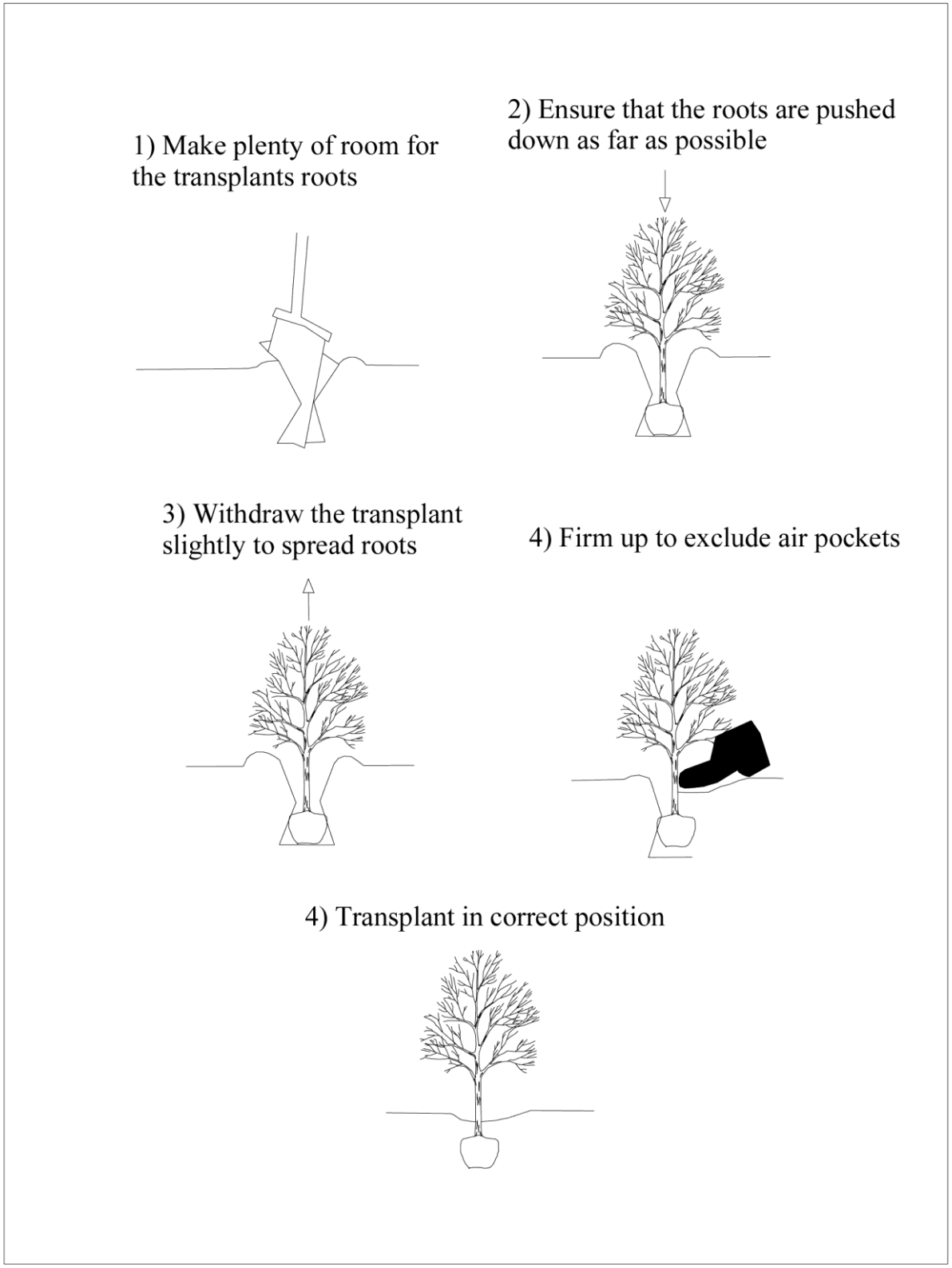

Appendix 9: Author Qualifications

Adam West, Principal Ecologist

BSc (Hons) Animal and Wildlife Management, ACIEEM.

Adam joined JCA to lead the expanding ecology department. Having returned to education as a mature student, Adam studied Countryside Management for two years before undertaking a Batchelor's degree in Animal and Wildlife Management, for which he was awarded First Class Honours. Adam has many years' experience in ecological consultancy, working on projects ranging from individual planning applications to national infrastructure projects. Adam holds a Natural England Level 1 great crested newt survey class licence and a Natural England Level 2 bat survey class licence.

Alex Donovan, Graduate Ecologist

MBIOL, BSc Biology (Industrial).

Alex joined JCA in 2023 after graduating from the University of Leeds with a First Class Honours Integrated Master's degree in Biology. As part of his degree programme, Alex spent an industrial placement year working in the Uplands Research Department of the Game and Wildlife Conservation Trust, assisting on various ecological surveys and projects. Alex is a registered Trainee Bird Ringer, licensed through the BTO, and has previously conducted seasonal bat emergence and transect surveys. Alex is currently working towards a level 1 bat licence, level 1 great crested newt licence, and a barn owl survey licence.

James Foster, Assistant Ecologist

BSc (Hons) Biology.

James gained his undergraduate degree in biology in 2012 from University of Leeds. James has plenty of experience in ecology, having worked countless projects of different scales all over the north and midlands. James has 9 years of experience surveying anything from reptiles to hedgerows and holds a Great crested newt licence level 1 and is working towards his bat licence and barn owl licence.

© JCA Limited 2024

The Information and advice which we have prepared and provided is true and has been prepared and provided in accordance with the CIEEM's Code of Professional Conduct. We confirm that the opinions expressed are our true and bona fide opinions.

Signed

.....

Alex Donovan *MBIOL, BSc (Hons)*

10/10/2024

Reviewed by

.....

James Foster *BSc (Hons)*

10/10/2024

Reviewed and authorised by

.....

Adam West *BSc (Hons), ACIEEM*

12/10/2024

© JCA Limited 2024

For and on behalf of ***JCA Ltd***

Registered Office:

Unit 80
Bowers Mill
Branch Road
Barkisland
Halifax
HX4 OAD

Tel. 01422 376335
Fax. 01422 376232
Email: info@jcaac.com
Web : www.jcaac.com

© JCA Limited 2024

ECOLOGICAL SERVICES

Ecological Pre-Planning Services

- Phase 1 Habitat Surveys
- Great Crested Newt eDNA Sampling
- Protected species: Bat, Wintering and Nesting Bird, Badger, Amphibian, Otter, Water Vole, White-Clawed Crayfish, Dormice and Reptile Surveys.
- Preparation for Environmental Impact Assessment (EIA)
- Invasive Species Surveys
- Code for Sustainable Homes
- Butterfly & Insect Surveys

Ecological Post-Planning Services

- Biodiversity Enhancement Plans
- Protected Species Mitigation
- Ecological Management (Bat and Bird box installation and inspection)
- Planting Schemes
- Monitoring of bird or bat boxes.

ARBORICULTURAL SERVICES

Guidance for Architects & Developers

- British Standard 5837 Surveys
- Arboricultural Implications Assessments (AIA)
- Arboricultural Method Statements (AMS)

Advice for Engineers, Loss Adjusters and Insurers

- Tree Surveys for Subsidence
- Heave Assessment
- Tree Root Identification

Advice for Local Authorities and Social Housing

- Tree Safety Surveys
- Specialist Decay Detection
- Landscape and Orchard Design

Tree Advice for the Legal Profession

- Subsidence Litigation
- Personal Injury and Accident Investigation
- Expert Witness, Planning Inquiries and Appeals

Veteran Tree Management

- Ancient Woodland Management
- Veteran Tree Management

Tree Health and Pest and Disease Management

- Pest and Disease Surveys
- Tree Health Checks
- Disease Mitigation and Control

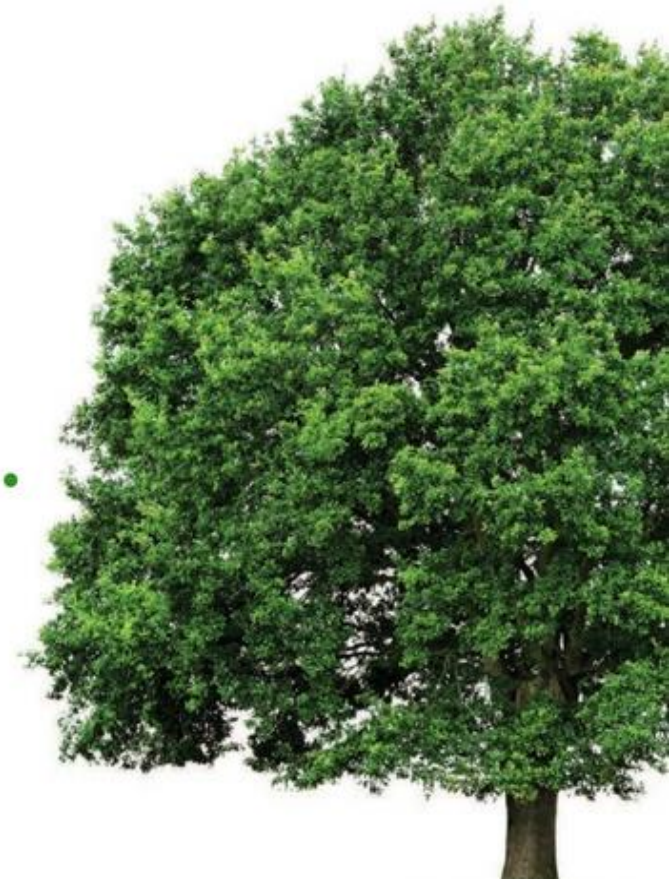

JCA Limited
Arboricultural & Ecological Consultants

HEAD QUARTERS

Unit 80 Bowers Mill,
Branch Road,
Barkisland
Halifax, HX4 0AD

Company Reg No: 05005041
VAT No: 686 4674 78