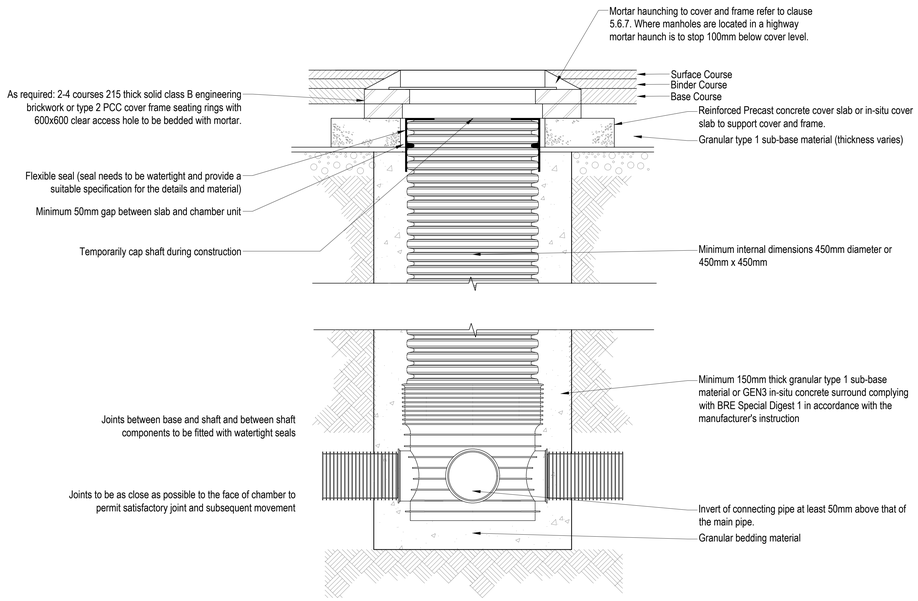

TYPICAL MANHOLE DETAIL PPIC

NOT TO SCALE

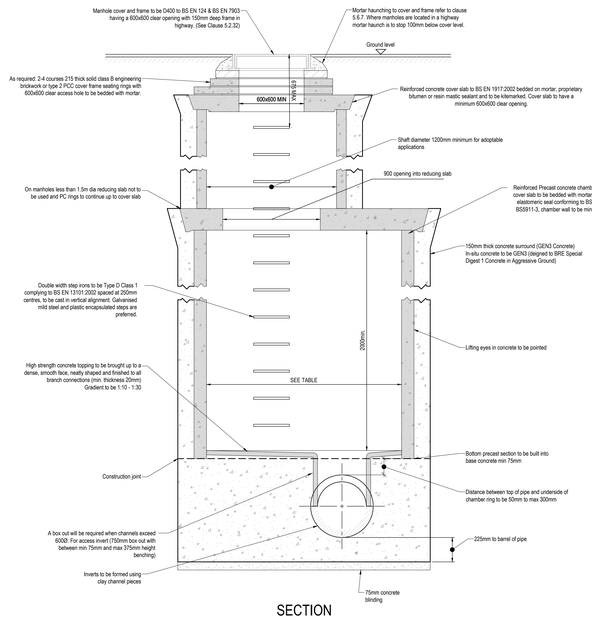

SECTION

NOTE: OPENING TO BE LOCATED CENTRALLY OVER 1200mm SHAFT AND OFFSET APPROXIMATELY 200mm FOR 1200mm DIAMETER SHAFT WITH RING

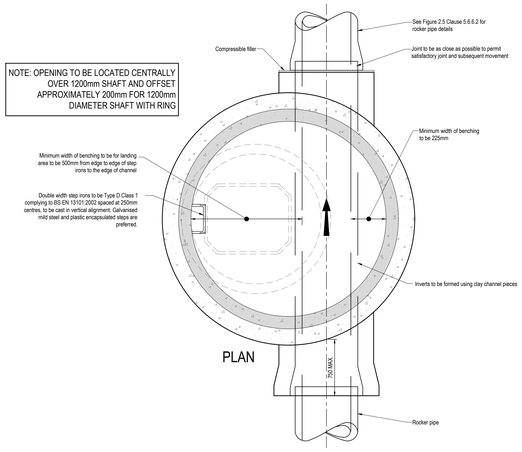

TYPICAL MANHOLE DETAIL TYPE A
DEPTH TO SOFFIT OF PIPE 3000 TO 6000
SCALE 1:20

Notes-

This drawing is copyright and must not be copied in part or in whole unless agreed with Avie Consulting Ltd

All dimensions are in millimetres unless noted otherwise

DO NOT SCALE THIS DRAWING - IF IN DOUBT ASK

1. All dimensions & levels to be checked by the contractor prior to commencement of work, any discrepancy shall be reported immediately to Avie Consulting Ltd
2. All work shall be carried out in accordance with Local Authority, statutory authority, health & safety requirements and regulations.
3. The drawings shall be read in accordance with all other contract documents relevant at that time of issue and during the period of the contract.
4. The contractor must ensure the overall stability of the works is adequate at all stages of the construction.
5. No allowance has been made for cutouts, holes, notches, etc. for services. All of these are to be agreed prior to the start of the works.

YORKSHIRE WATER STANDARD NOTES

All adoptable sewer works and material to be in accordance with Sewerage Sector Guidance Design and Construction Guidance [Code for Adoption]. The Relevant British/European and Yorkshire Water's Standards/Requirements/Local Practice for the Adoption of Small Submersible Foul and Surface Water Pumping Stations and Kitemarked.

Sewers must have 5 metres clearance from trees and hedges or the width of the canopy at mature height.

There must be enough clearance at crossovers to accommodate bedding to both pipes, approx. 300mm - if crossover is near the rocker then the clearance needed may be increased".

Adoptable plastic sewer pipes to be BSI Kitemarked (certified to WIS 4-35-01 and BS/EN13476). Adoptable plastic sewer pipes to be laid in maximum 3 metre lengths unless there is a specific operational need to lay longer lengths. Plastic channel sections in manholes are not acceptable and Yorkshire Water would prefer clayware channel in manholes.

Under the Code for Adoption as stipulated by Ofwat, no sewer works are to be carried out until Conditional and / or Technical Acceptance has been granted for the site.

Section 111 of the Water Industry Act 1991

Under the provisions of Section 111 of the Water Industry Act 1991 it is unlawful to pass into any public sewer (or into any drain or private sewer communicating with the public sewer network) any items likely to cause damage to the public sewer network interfere with the free flow of its contents or affect the treatment and disposal of its contents. Amongst other things this includes construction materials. Contravention of the provisions of Section 111 is a criminal offence.

Sulphate resistant cement (C20-DC2) and precast concrete products must be used or a laboratory report provided proving that such precautions are not necessary.

The adoptable sewers should be a minimum of 1m and manholes 0.5m from kerb faces and service margins.

Sewers to be laid in Class 'S' bedding (150mm granular bed and surround). Where depth of cover to top of the sewer is less than 1.2m in highways and verges (or less than 900mm in non-vehicular access areas) then a concrete slab should be provided above granular bed and surround.

Bedding and backfill material to conform to the requirement of Water Industry Specification 4-08-02 (Table A2).

The chamber size of manholes with more than one connection in them may need to be increased an increment to accommodate the connections and bends.

Yorkshire Water policy is not to accept Type 'C' brick manholes and 1050mm dia. manhole rings. Instead it is preferred that you use a Type 'B' manhole with 1200mm dia. or 1500mm dia rings, with the opening sited over the channel where depth of cover to pipe soffit is 1 - 1.5m.

There must be enough clearance at crossovers to accommodate bedding to both pipes, approx. 300mm. if crossover is near the rocker then the clearance needed may be increased.

The minimum crushing strength for clay pipes should be as follows: 100mm dia. 40kn/m, 150mm dia. 40kn/m, 225mm dia. 45kn/m and 300mm dia. 73kn/m. The minimum crushing strength for concrete pipes should be (Class 120 to EN 1916/BS5911-1 2002). Plastic pipes should conform to WIS 4-35-01 and BS EN13476.

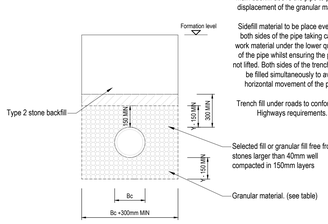

CLASS S DETAIL

Boxing / sheeting to be removed progressively during placement of the main backfill above the pipe to prevent displacement of the granular material.

Sidefill material to be place evenly on both sides of the pipe taking care to work material under the lower quadrant of the pipe whilst ensuring the pipe is not lifted. Both sides of the trench should be filled simultaneously to avoid horizontal movement of the pipe.

Trench fill under roads to conform with Highways requirements.

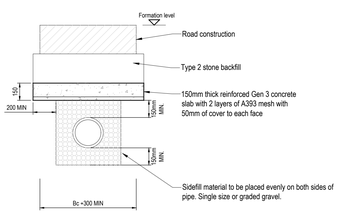

CLASS S DETAIL WITH RC SLAB
COVER < 1200mm FOR HIGHWAYS COVER
< 900mm FOR NON-VEHICULAR ACCESS

NOMINAL PIPE DIA (mm)	SINGLE SIZED (mm)	GRADED (mm)
150	10 or 14	14 to 5
200 to 300	10, 14 or 20	14 to 5 or 20 to 5
375 to 525	14 or 20	14 to 5 or 20 to 5
Greater than 525	14,20 or 40	14 to 5,20 to 5 or 40 to 5

GRANULAR BEDDING MATERIAL
(ALL AGGREGATES TO TABLE 4 OF BS 882:1983)

NOTES
A) Bc = OUTSIDE DIAMETER OF PIPE BARREL.
B) Y = FOR UNIFORM SOILS
SLEEVE JOINTED PIPES. MIN. 150mm OR ½ Bc. WHICHEVER IS THE GREATER.
SOCKETED PIPE. MIN. 150mm OR ½ Bc. WHICHEVER IS THE GREATER UNDER BARRELS AND NOT LESS THAN 50mm UNDER SOCKETS.

FOR ROCK OR MIXED SOILS CONTAINING ROCK BANDS, BOULDERS, STONES OR OTHER IRREGULAR HARD SPOTS:
SLEEVE JOINTED PIPES. MIN. 150mm OR ½ Bc. WHICHEVER IS THE GREATER.
SOCKETED PIPE. MIN. 200mm OR ½ Bc. WHICHEVER IS THE GREATER UNDER BARRELS AND NOT LESS THAN 150mm UNDER SOCKETS.

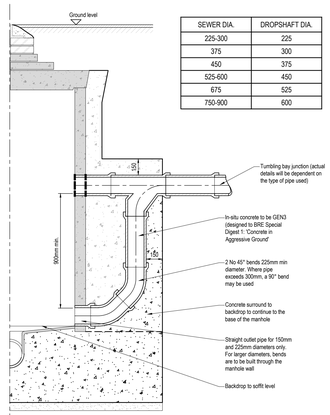

SEWER DIA.	DROPSHAFT DIA.
225-300	225
375	300
450	375
525-600	450
675	525
750-900	600

SECTION

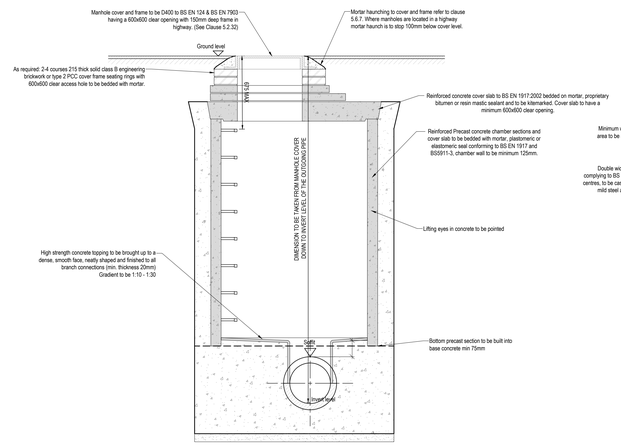

SECTION

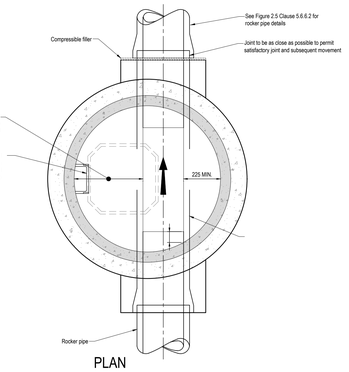

TYPICAL MANHOLE DETAIL TYPE B
DEPTH TO SOFFIT OF PIPE 1500 TO 3000
SCALE 1:20

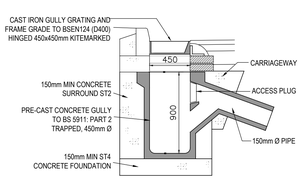

PRECAST CONCRETE ROAD GULLY DETAIL
SCALE 1:20

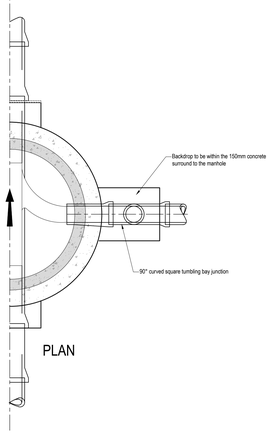

PLAN

TYPICAL VERTICAL BACKDROP MANHOLE DETAIL
(NOTE: CONSTRUCTION DETAILS AS STANDARD PCC MANHOLE)

SELECTION OF THIS TYPE OF MANHOLE RESTRICTED TO LOCATIONS WHERE GRADE B COVERS ARE TO BE USED (DUE TO LOAD CAPACITY LIMITATIONS OF SLAB)

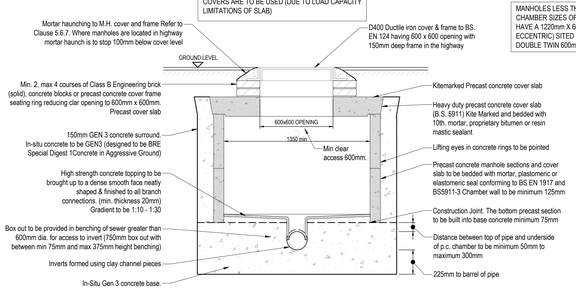

TYPICAL TYPE 'C' MANHOLE SECTION
DEPTH FROM GROUND LEVEL TO SOFFIT OF PIPE LESS THAN 1.5m
SCALE 1:20

ALL PRECAST CONCRETE TO BS 5911:2 & BS 8301 KITEMARKED.

MANHOLES LESS THAN 1500mm TO SOFFIT WITH CHAMBER SIZES OF 1500mm OR LARGER SHOULD HAVE A 1220mm X 600mm OPENING (CENTRAL OR ECCENTRIC) SITED OVER THE CHANNEL WITH DOUBLE TWIN 600mm X 600mm COVERS.

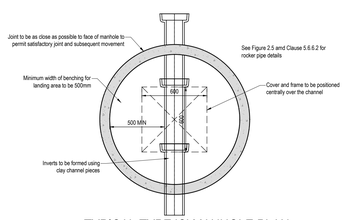

TYPICAL TYPE 'C' MANHOLE PLAN
DEPTH FROM GROUND LEVEL TO SOFFIT OF PIPE LESS THAN 1.5m
SCALE 1:20

Rev	Details	By	Chk	Date
P00	Initial Issue	S.T.P.	N.A.	18.10.2023

AVIE CONSULTING LTD
6 Killingbeck Court,
Killingbeck Office Village,
Killingbeck Drive,
Leeds LS14 6FD.
Tel: 0113 249 7416
www.avie-consulting.co.uk

Client: Preistroyd Construction Ltd

Project: Residential Development
Pentlands, New Mill Road, Holmfirth

Title: S104 Standard Construction Details

Drawn:	Checked:	Date:	Scale:	Original dwg size:
S.T.P.	N.A.	Oct 2023	AS STATED	A0

Drawing Number: P3052-10 Rev: P00