SURFACE WATER MANHOLE SCHEDULE											
MANHOLE REF:	PIPE OUTLET SIZE mm	PIPE MATERIAL	COVER LEVEL	INVERT LEVEL	DEPTH m	DEPTH to soffit	CHAMBER TYPE	CHAMBER SIZE mm	COVER TYPE	COVER SIZE mm	COMMENTS
SW1	2 x 1000	CONC	89.500	86.860	2.640	1.640	CONC B	2400	D400	600	
SW2	225	Clay	89.500	88.700	0.800	0.575	PPIC	600	D400	600	
SW3	2 x 1000	CONC	89.500	86.660	2.840	1.840	CONC B	2400	D400	600	
SW4	150	Polysewer	88.700	87.700	1.000	0.850	PPIC	600	D400	600	
SW5	150	Polysewer	88.700	87.000	0.900	0.750	PPIC	600	D400	600	
SW6	150	Polysewer	88.700	87.700	1.000	0.850	PPIC	600	D400	600	
SW7	2 x 1000	CONC	88.500	86.760	1.740	0.740	CONC C	2400	D400	600	
SW8	150	Polysewer	88.500	87.500	1.000	0.850	PPIC	600	D400	600	
SW9	150	Polysewer	88.500	87.500	1.000	0.850	PPIC	600	D400	600	
SW10	225	Clay	88.400	86.700	1.700	1.475	See detail		D400	600	13.1l/s hydrobrake

FOUL WATER MANHOLE SCHEDULE											
MANHOLE REF:	PIPE OUTLET SIZE mm	PIPE MATERIAL	COVER LEVEL	INVERT LEVEL	DEPTH m	DEPTH to soffit	CHAMBER TYPE	CHAMBER SIZE mm	COVER TYPE	COVER SIZE mm	COMMENTS
FW1	150	Polysewer	89.500	88.600	0.900	0.750	PPIC	450	D400	450	
FW2	150	Polysewer	89.500	88.400	1.100	0.950	PPIC	450	D400	450	
FW3	150	Polysewer	89.500	87.420	2.080	1.930	PPIC	600	D400	600	Limited Access
FW4	150	Polysewer	88.800	87.500	1.300	1.150	PPIC	450	D400	450	
FW5	150	Polysewer	88.700	87.370	1.330	1.180	PPIC	450	D400	450	
FW6	150	Polysewer	88.500	87.150	1.350	1.200	PPIC	450	D400	450	
FW7	150	Polysewer	88.500	86.980	1.520	1.370	PPIC	600	D400	600	Limited Access
FW8	150	Polysewer	88.500	86.830	1.670	1.520	PPIC	600	D400	600	Limited Access
FW9	150	Polysewer	88.500	87.430	1.070	0.920	PPIC	450	D400	450	
FW10	150	Polysewer	88.500	87.160	1.340	1.190	PPIC	450	D400	450	
FW11	150	Polysewer	88.500	87.000	1.500	1.350	PPIC	600	D400	600	Limited Access
FW12	150	Polysewer	88.500	86.830	1.670	1.520	PPIC	600	D400	600	Limited Access

COMBINED WATER MANHOLE SCHEDULE											
MANHOLE REF:	PIPE OUTLET SIZE mm	PIPE MATERIAL	COVER LEVEL	INVERT LEVEL	DEPTH m	DEPTH to soffit	CHAMBER TYPE	CHAMBER SIZE mm	COVER TYPE	COVER SIZE mm	COMMENTS
CW1	225	Polysewer	88.400	86.650	1.750	1.525	PPIC	600	D400	600	Limited Access

Typical Manhole Construction

Type B (Design and Construction Guidance)

Maximum depth from cover level to sofit of pipe 3000mm

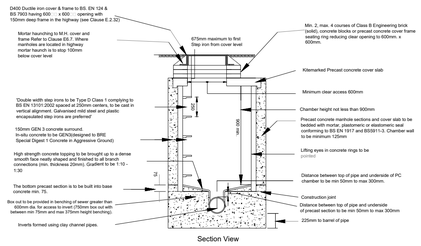

Shallow Manhole Construction

Type C (Design and Construction Guidance)

Construction of manhole where depth from sofit to cover level less than 1.5m

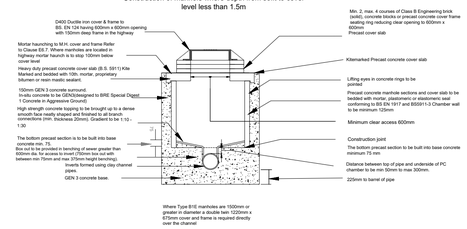

Shallow Manhole Plan View

Type C (Design and Construction Guidance)

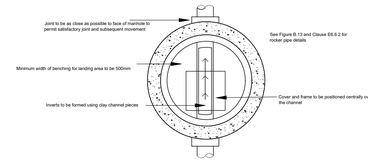

FLOW CONTROL MANHOLE SW10

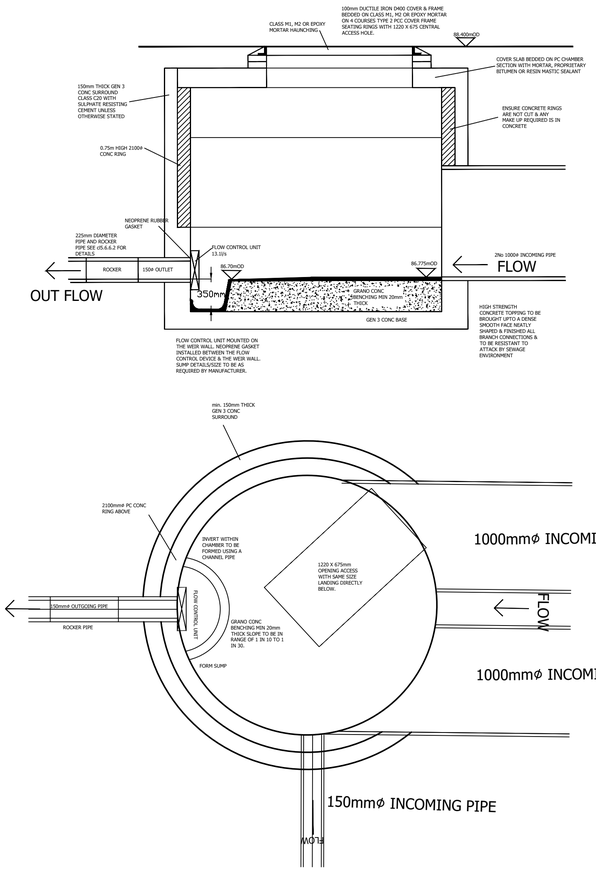

REV	DESCRIPTION	DATE
0	Planning condition drawing	18/04/23

Pipe surround details

Boxing/sheeting to be removed progressisively during placement of the main backfill above the pipe to prevent displacement of the granular material.

Sidefill material to be place evenly on both sides of the pipe taking care to work material under the lower quadrant of the pipe whilst ensuring the pipe is not lifted. Both sides of the trench should be filled simultaneously t o avoid horizontal movement of the pipe

Trench fill under roads to conform with Highways requirements.

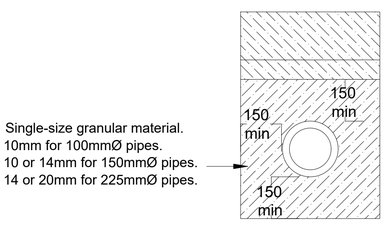

Typical detail through Class S Bed and Surround

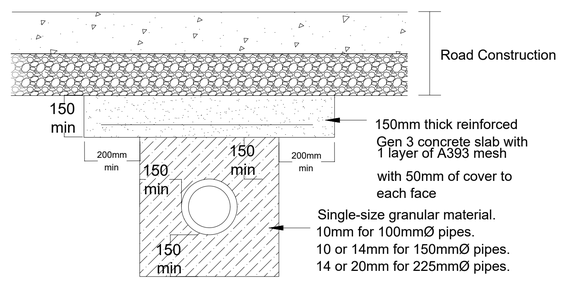

Typical detail through Class S Bed and Surround with concrete slab protection (to be used where sewer is less than 1200mm in depth in trafficked areas and less 900mm in un-trafficked areas)

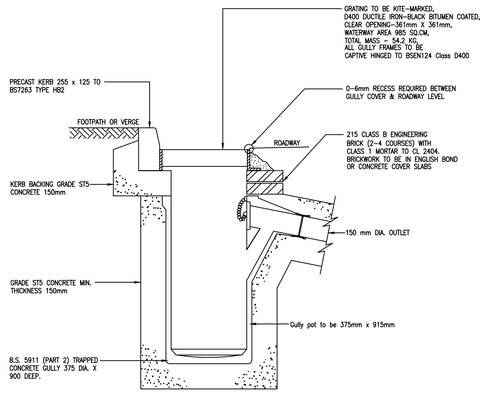

NOTES

1. DESIRABLE MIN. SLOPE OF GULLY OUTFALL TO BE 1 IN 10.
2. 150mm GULLY CONNECTIONS TO BE SURROUNDED IN CONCRETE UNTIL COVER EXCEEDS 1.2m.
3. EXCAVATIONS AROUND GULLIES TO BE BACKFILLED WITH CLASS 1 MATERIAL AS DESCRIBED IN TABLE 6/1 AND COMPACTED AS DESCRIBED IN COMPLIANCE WITH CLAUSE 612. WHERE MECHANICAL COMPACTION IS IMPRACTICABLE, THE EXCAVATION IS TO BE BACKFILLED WITH GRADE ST5 CONCRETE.
4. GULLY FRAMES SHALL BE ACCURATELY LOCATED SO THAT THEY ARE:-
   i. SET DIRECTLY ABOVE THE GULLY CHAMBER
   ii. SET WITH THE BACK EDGE OF THE FRAME DIRECTLY ABUTTING THE FRONT FACE OF THE KERB
4. All covers to be pedestrian friendly.

ROAD GULLY

EWE Associates Limited
Windy Ridge Barn
Thealby Lane
Winterton
Scunthorpe
DN15 9TG
Tel: 07875 972270
Email : lea.favill@eweassociates.com

PROJECT
Land at Scott Lane
Cleckheaton

CLIENT
D & M Middleton Ltd

DRAWING TITLE
Drainage Details

SCALE	DATE	
1:200	18/04/2023	
DRAWN BY	CHECKED BY	REVISION
LJF	JF	0

DRAWING No
EWE/2514/02