Arboricultural Method Statement

Chadwick Crescent

Dewsbury

Table of Contents

1 Introduction....3
1.1 Purpose of report....3
1.2 Status....3
2 Preparation for development....4
2.1 Necessary tree works....4
2.2 Protective fencing....4
2.3 Site inspection....4
3 Development Phase....5
3.1 The root protection area (RPA)....5
3.2 Demolition of existing hard surfaces within the RPA....5
3.3 Demolition of existing buildings and other features within the RPA....5
3.4 Construction of special surfaces....6
3.5 Service runs....6
3.6 Changes in ground level....6
3.7 Removal of protective fencing....6
3.8 Post Construction Landscaping....7
4 Completion meeting....8
5 Contact Details....9
Appendix 1: Tree works....10
Appendix 2: Tree protective fencing....11
Appendix 3: Example sign to be attached to tree protective fencing....12
Appendix 4: Example special surfaces within the RPA....13
Appendix 5: Tree protection plans....14

1 Introduction

1.1 Purpose of report

This report has been created to ensure good practice in the management of trees during the proposed development at: Chadwick Crescent, Dewsbury

1.2 Status

The recommendations of this report are based on the plans as provided and incorporates information provided by the client.

This report should be included as part of any specifications and schedules of works supplied to all demolition and construction contractors.

2 Preparation for development

2.1 Necessary tree works

The first operation will be the tree pruning and felling works as detailed at **Appendix 1**.
All tree works should be carried out by suitably qualified, experienced and insured contractors in accordance with BS3998: 2010.
In order to both reduce costs and to ensure timely completion, no check has been made by this consultant with the local planning authority.
We recommend that the local planning authority is contacted to check whether the trees on this site are protected by a Tree Preservation Order or are within a Conservation Area.
Trees may also be subject to legal protection under a range of other legislation, much of which is aimed at wildlife and habitat protection.
No work should be done to any trees until either suitable permission has been granted or it has been verified that the intended work does not require permission.
We are happy to assist in establishing whether trees on this site are protected by a Tree Preservation Order or a Conservation Area designation if required.

2.2 Protective fencing

The protective fences can be installed after the necessary tree works are completed, but they must be fully installed and completed before any other work commences, this includes; demolition, soil stripping or the bringing onto site of materials, supplies or machinery.
Protective fencing must be constructed in such a way as to exclude construction activity and be appropriate to the degree and proximity of likely works. The default fencing as described in BS5837:2012 is shown at **Appendix 2**.
Unless otherwise specified in this report or its attached drawings the fenced areas shall be considered complete construction exclusion zones; there shall be no pedestrians, vehicles, materials, equipment or machinery allowed in the fenced areas at any time.
There should be adequate signs informing all relevant persons that access is denied, an example sign is included at **Appendix 3**.
Care must also be taken to prevent fenced areas being contaminated with chemical spillages, including; petrol, diesel, oils, cements and concretes. In addition, water run-off from areas of construction activity must be diverted away from fenced areas.

2.3 Site inspection

Once the necessary tree works have been completed and the protective fences are in place it is recommended that the developer's arboriculturist is invited to visit the site, meet with the relevant local authority representative, and check that the necessary tree works and the protective fences are completed satisfactorily.

3 Development Phase

3.1 The root protection area (RPA)

The root protection area (RPA) is the area of ground it is desirable to leave undisturbed during development. BS5837:2012 recognises that this is often not practical and that some development within the RPA should be allowed.

The RPAs are shown on the attached plan as hatched circles or polygons.

Other than the activities as shown in this method statement, there must be no activity of any kind within any RPA unless it is by prior written agreement of the local authority.

3.2 Demolition of existing hard surfaces within the RPA

Existing hard surfaces must be removed with caution to prevent damage to tree roots. This should be done using hand tools, but suitable machinery may be used in some situations.

Where machinery is to be used to break up existing surfaces then work should be done progressively; starting closest to the trees and working backwards towards the outer edge of the root protection areas. Tracks, wheels, or other load bearing parts of machinery used must be located on existing hard surfaces at all times when within the root protection area – vehicles, machinery and equipment must not enter the areas where hard surfaces have already been removed.

Excavation within the RPA must not be deeper than the existing hard surface unless otherwise agreed in writing with the local authority.

Broken up tarmac, concrete and other arisings should ideally be removed by hand using a wheel barrow. However, where the use of machinery (such as excavators, mini-diggers, or dump trucks) is permitted by the local authority, then buckets must have a straight edge and vehicle tracks and/or wheels must be located on existing hard surfaces at all times when within the root protection area.

3.3 Demolition of existing buildings and other features within the RPA

Often there are existing buildings within the RPA, these must be demolished inwards and within their existing footprint.

Existing foundations and other below ground or surface features must be either left in place, or must be dismantled and removed as described in section '3.2 - Demolition of existing hard surfaces within the RPA'.

3.4 Construction of special surfaces

Where special surfaces are to be constructed within the RPA then these surfaces must be completed prior to the areas being used for pedestrian or vehicle access.

Until special surfaces within the RPA are complete the RPA must be treated in the same way as any other area which has been protected with tree protective fencing as described at 3.1.

This means that until the surface is fully installed, there must be no; pedestrians, vehicles, materials, equipment or machinery allowed within the RPA at any time, other than as required for construction of the special surface.

The design and construction techniques of special surfaces within tree root protection areas must meet the biological and environmental requirements of tree roots; the expected level and type of traffic; and be practicable in terms of time and resources required for construction.
BS5837:2012 recommends that where the construction of a hard surface is required within the root protection area a "no dig" construction method is used where possible
The various requirements for a hard surface within the RPA are often achieved using a load suspension layer incorporating a three dimensional cellular confinement system. Other systems are also occasionally used.
Any proposed surfaces within the RPA must be fully specified by a suitable engineer and be agreed in writing with the local planning authority prior to implementation.

3.5 Service runs

New underground services **must not** be installed within the tree root protection areas.
Above ground services should be positioned away from the crowns of trees to be retained.
Any works to existing underground services should be done in accordance with current NJUG (National Joint Utilities Group) guidance.

3.6 Changes in ground level

There must be no works within an RPA unless by prior written agreement of the local authority.

3.7 Removal of protective fencing

When the development phase is complete, all drainage and service runs are in place, and the main site machinery has been removed, the protective fencing may be dismantled. This must be done with care, there must be no; vehicles, materials, equipment or machinery allowed within the RPA at any time.

3.8 Post Construction Landscaping

Some trees on the site are likely to be subject to some form of landscaping or seeding beneath the canopy after the main development phase has been completed. At this stage, it is inevitable that some of the protective fencing will have already been removed.
In view of this, the landscaping works must be carried out in such a way as to avoid ground level changes or deep digging. Mechanised cultivation methods must be avoided within the RPA.
There must be no; vehicles, materials, equipment or machinery allowed within the RPA of retained trees at any time.
Any herbicides used must be appropriate for their purpose, and must not be used in such a way as will damage trees to be retained.

4 Completion meeting

Upon completion of all the works specified, it is recommended that the developer’s arboriculturist and the local authority's arboriculturist are invited to meet on site to check that all works are completed satisfactorily and to discuss any remedial works as required.

5 Contact Details

I hope this report provides all the required information. However, if further advice is needed then please contact me and I will be happy to help.

James Royston – Independent Arboricultural Consultant
MSc Arboriculture and Urban Forestry, BSc (Hons) Forestry.

The Media Centre

7 Northumberland Street

Huddersfield

01484 483 061

jr@jamesroyston.co.uk

Report completed 13th January 2024

Appendix 1: Tree works

Tree Number	Common Name	Botanical Name	Pre-development tree works	Reason for works
1	Sycamore	*Acer pseudoplatanus*	None	NA
2	Turkey oak	*Quercus cerris*	None	NA
3	Sycamore	*Acer pseudoplatanus*	None	NA
4	Sycamore	*Acer pseudoplatanus*	None	NA
5	Turkey oak	*Quercus cerris*	None	NA

Appendix 2: Tree protective fencing

Figure 2 **Default specification for protective barrier**

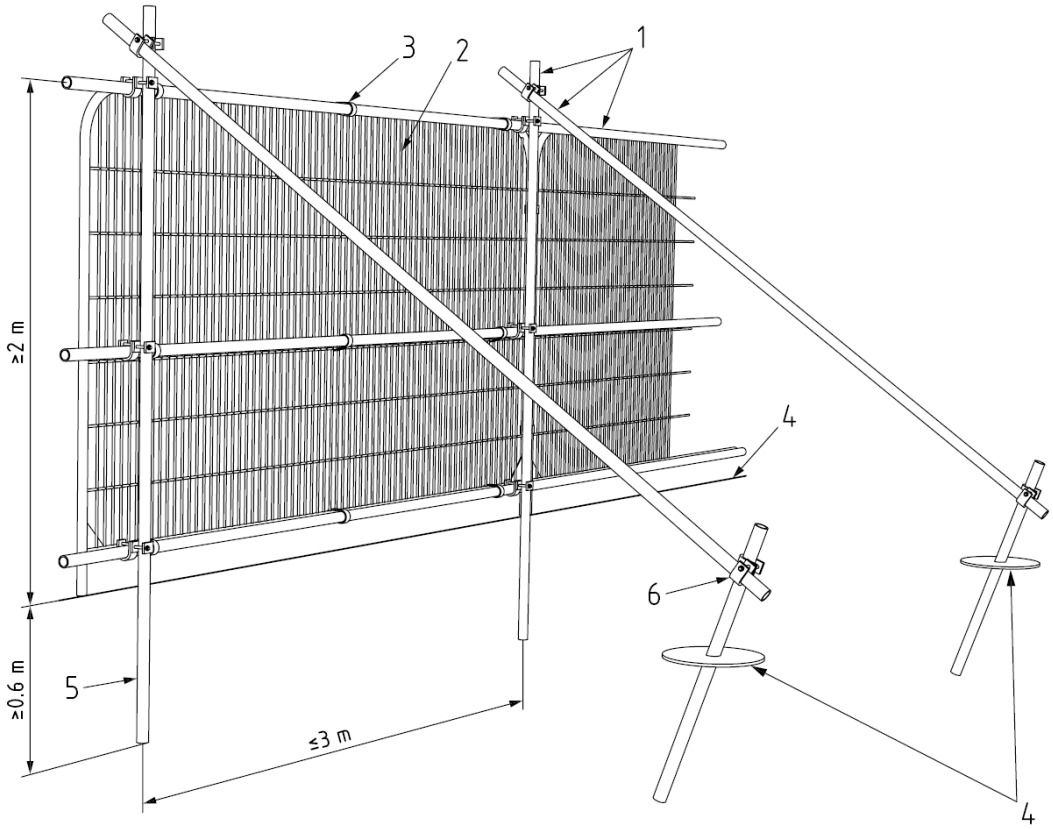

Key

1 Standard scaffold poles

2 Heavy gauge 2 m tall galvanized tube and welded mesh infill panels

3 Panels secured to uprights and cross-members with wire ties

4 Ground level

5 Uprights driven into the ground until secure (minimum depth 0.6 m)

6 Standard scaffold clamps

Figure 3 **Examples of above-ground stabilizing systems**

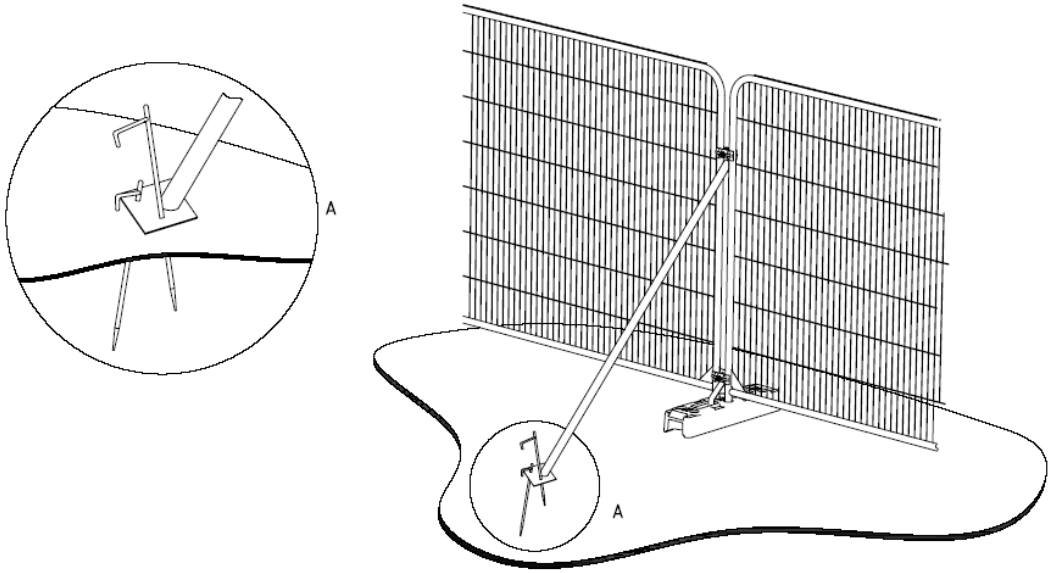

a) Stabilizer strut with base plate secured with ground pins

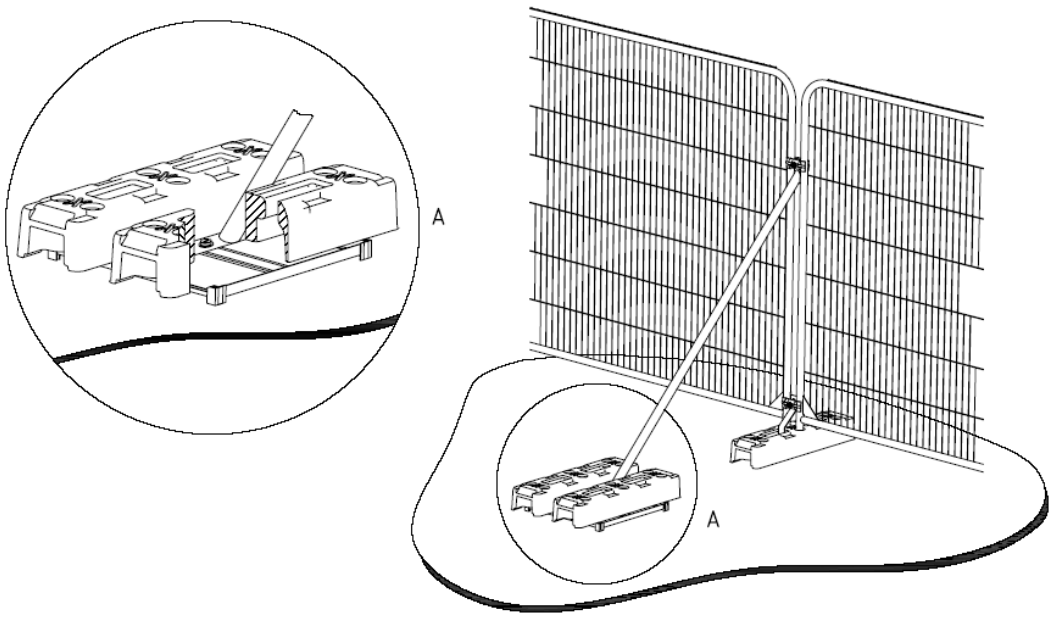

b) Stabilizer strut mounted on block tray

Appendix 3: Example sign to be attached to tree protective fencing

TREE PROTECTION AREA - KEEP OUT

TREES ENCLOSED BY THIS FENCE ARE PROTECTED
BY PLANNING CONDITION AND/OR A TREE PRESERVATION ORDER

NO INCURSION WITHOUT THE PRIOR WRITTEN PERMISSION OF THE
LOCAL PLANNING AUHORITY

Appendix 4: Example special surfaces within the RPA

Cellweb® TRP

Tree Root Protection

Cellweb® TRP is a 3D cellular confinement tree root protection system. The system provides a 'no dig' solution for the construction of new hard surfaces within root protection areas (RPAs). Cellweb® TRP has been designed and independently tested to comply with recommendations made in Arboricultural Practice Note 12 and BS 5837 2012 – Trees in relation to design, demolition and construction.

Cellweb® TRP Key Functions

Cellweb® is a 'no dig' solution which is constructed directly on the existing ground surface. This eliminates the requirement for excavation, preventing root severance.

Cellweb® is a completely porous system allowing continued water permeation and gas exchange between the rooting environment and atmosphere.

Cellweb® spreads point loads, minimising increases in soil compaction within the rooting environment. This maintains an open graded soil structure allowing continued root growth, water, gas and nutrient migration.

The Cellweb® TRP system comprises the following three components

Treetex™ Geotextile. Following minimal ground preparation the Treetex™ is laid onto the existing ground and top soil. This acts as a separation layer, separating the system above from the soil and rooting environment below. Treetex™ performs as a hydrocarbon pollution control measure in accordance with BS5837, holding 1.7lt of oil per square meter.

Cellweb® 3D Cellular Confinement. The Cellweb® is installed on top of the Treetex™ layer. This is fixed to the ground using ten steel J pins per panel. The panels can be cut to the required shape and adjoining panels can be connected using heavy duty staples or cell ties.

4-20mm Clean Angular Stone. The expanded Cellweb® is infilled with a 4-20mm clean angular stone. The confined angular stone locks together to produce a rigid stone mattress, while maintaining air pockets for continued water permeation and gas exchange. The low fines content of the stone prevents the Treetex™ layer from becoming blocked over time.

Which depth of Cellweb® TRP?

The Cellweb® System is provided in four different depths; 200mm, 150mm, 100mm and 75mm. The depth required is determined by the proposed traffic loadings and the site ground conditions. Geosynthetics in house engineering department can provide a free site specific technical recommendation. For free technical and engineering support please contact Geosynthetics Ltd 01455 617139 or the full installation guide can be found on our website www.geosyn.co.uk.

Indicative Cellweb with overfill

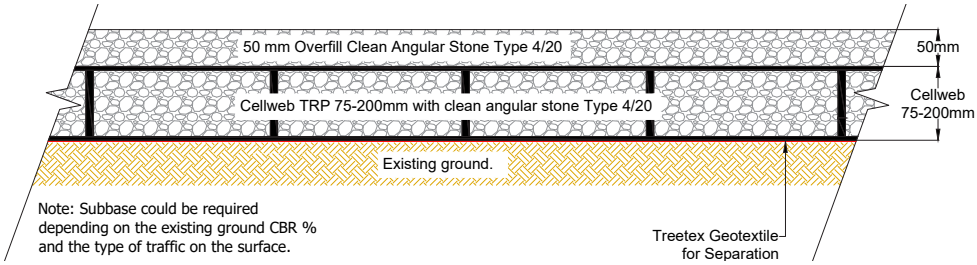

Web: www.geosyn.co.uk | Tel: 01455 617139
Fax: 01455 617140 | Email: Sales@geosyn.co.uk

Geosynthetics
Engineered Solutions

Appendix 5: Tree protection plans

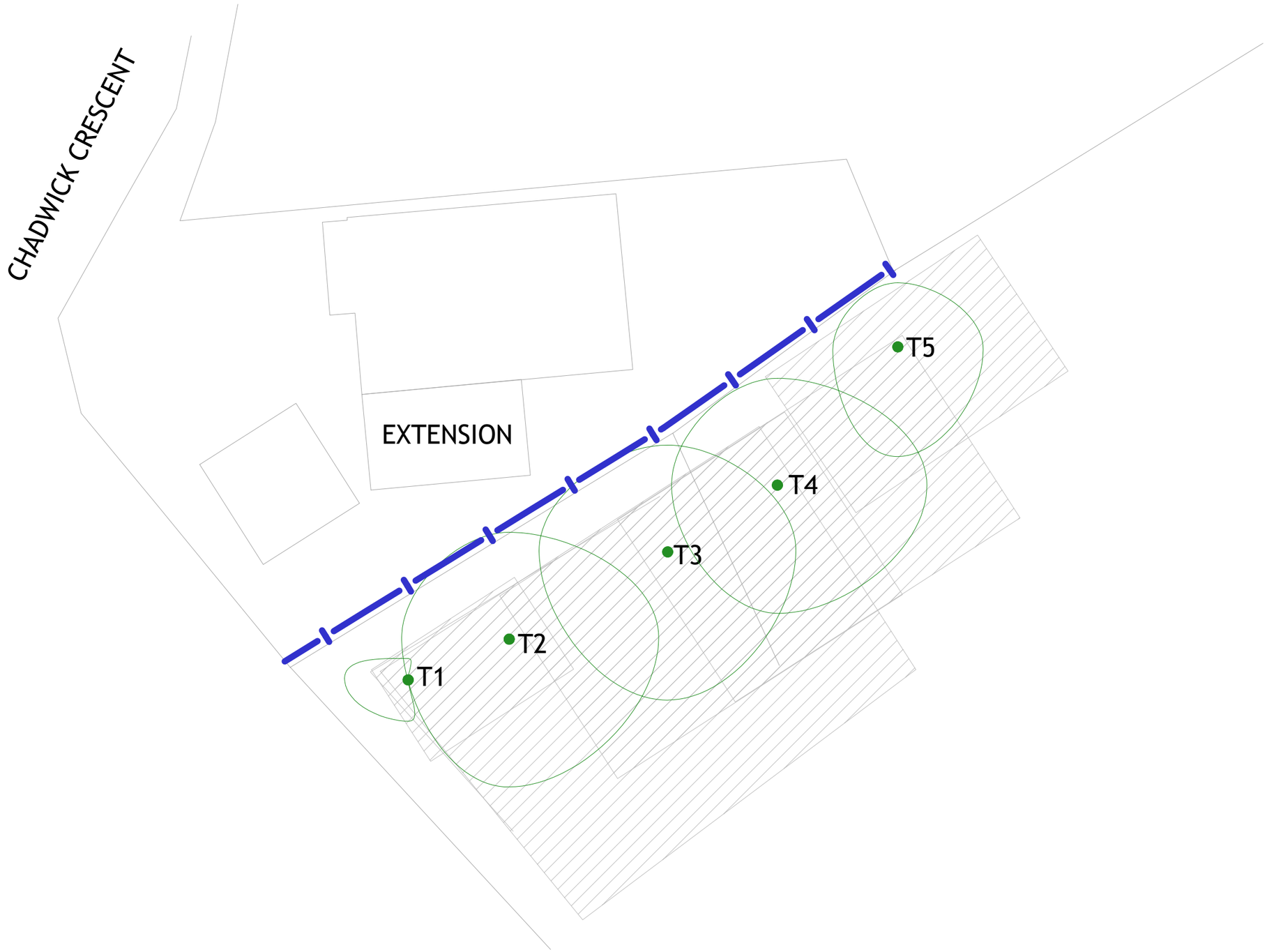

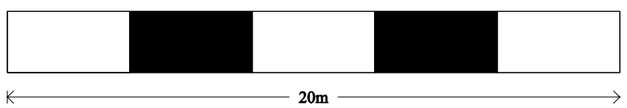

James Royston
Arboricultural Consultant
The Media Centre - 7 Northumberland Street - Huddersfield - HD1 1RL
jr@jamesroyston.co.uk - 01484 483 061 - www.jamesroyston.co.uk

Tree Protection Plan to BS5837:2012 at:
Chadwick Crescent, Dewsbury

1:200	PAPER SIZE A3

Key	
	Tree to be retained
	Tree to be removed
	Root Protection Area (RPA) shown as a circle as an approximate guide.
	Location of tree protective fencing
	Area of special tree protection measures. See annotations and method statement for further details.

Note: Plans are for guidance only. These drawings should not be be used for scaling.