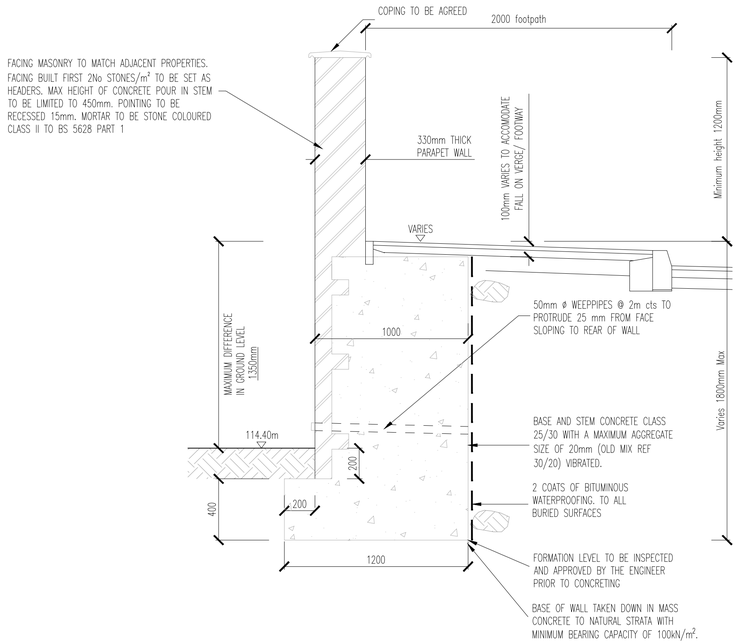

MASS CONCRETE HIGHWAY RETAINING WALL
(1350mm RETAINED HEIGHT)
(1:20)

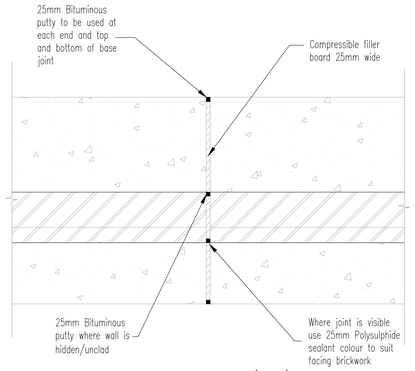

JOINT DETAIL (C.J.)
(1:20)

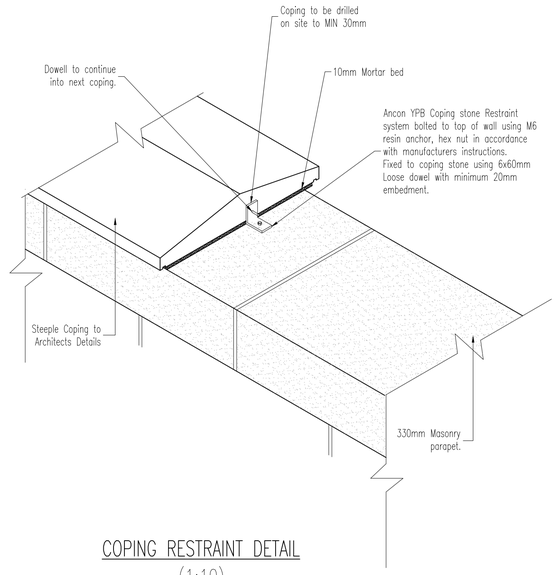

COPING RESTRAINT DETAIL
(1:10)

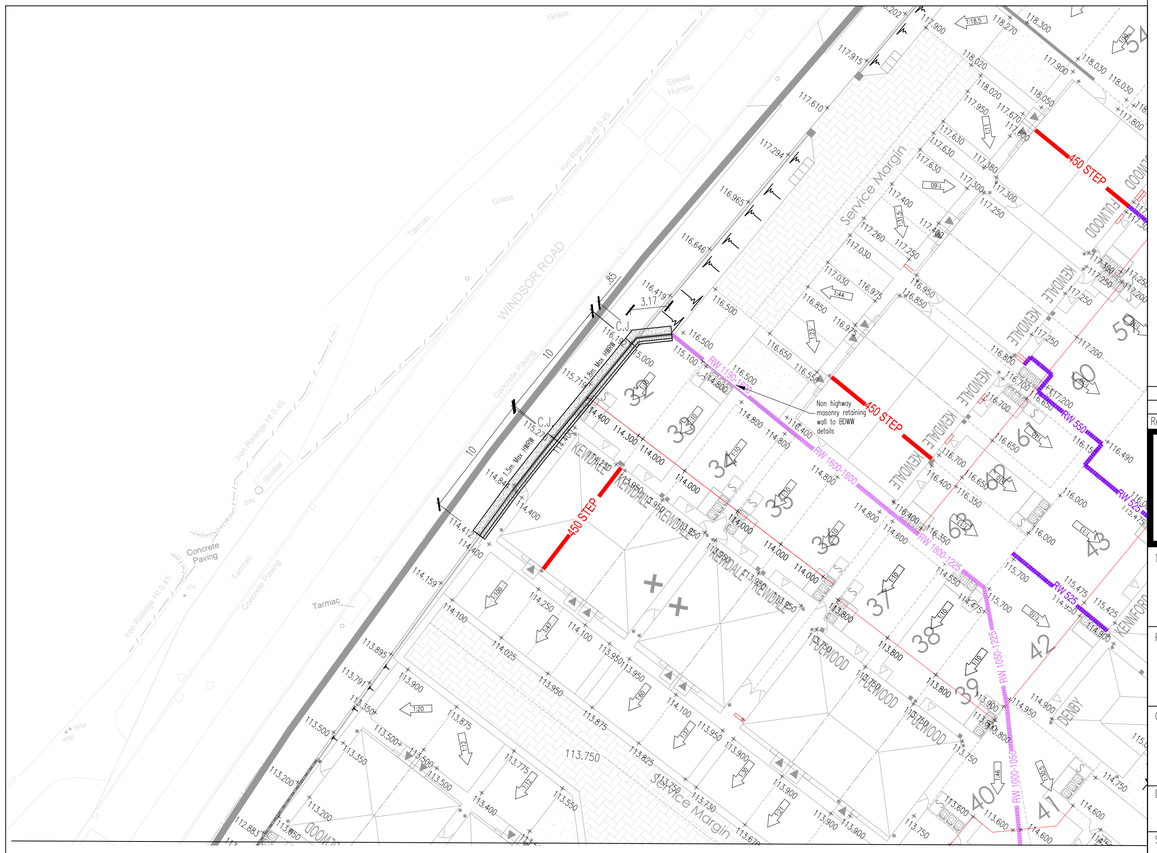

PLAN ON HIGHWAY RETAINING WALLS
(1:250)

N O T E S

1. This drawing is to be read in conjunction with all relevant drawings, details and specifications prepared by ARP Associates for this project.
2. Do not scale from this drawing use figured dimensions only.
3. All dimensions are in millimetres, UNO. All levels are in metres AOD UNO. All levels and dimensions are to be confirmed at site prior to construction.
4. All concrete to be in accordance with BS EN 206-1:2000, reinforcement to BS 4449:2005, Reinforcing mesh to be in accordance with BS4483:2005.
5. Concrete for highway retaining walls to be Grade C25/30.
6. Foundations have been designed assuming a ground bearing pressure of 100KN/m². If ground capable of sustaining this pressure is not found at depth shown, excavation should continue until a suitable strata is encountered.
7. Selected well graded granular backfill to be type 6N in accordance with DOT specification for Highway works series 600, Class 613.

Rev	By	Date	Revision	Chk	Apvd
A	DPB	06.10.22	Parapet wall increased to 1200mm high.	DPB	DPB
	DPB	07.07.22	Issued for Approval	DPB	DPB

ARP ASSOCIATES
Chartered Consulting Engineers
Northwest House ● 5 & 6 Northwest Business Park ● Servia Hill, Leeds ● LS6 2QH
☎ 0113 245 8498 ☎ 0113 244 3864 ✉ leeds@arpassociates.co.uk ● www.arpassociates.co.uk
ARP Associates is a trading division of ARP Geotechnical Ltd, a company registered in England and Wales with company number 3771811, whose registered office is at 5/6 Northwest Business Park, Servia Hill, Leeds LS6 2QH

TITLE
HIGHWAY RETAINING WALL DETAILS ADJACENT PLOT 32

PROJECT
OWL LANE, CHIDSWELL

CLIENT
BDW YORKSHIRE WEST

DRAWING STATUS
APPROVAL

Scale	Date	Drawn	Chk.
As shown @ A1	JUL 22	DPB	DPB

Drg. No. 1048/151/1000 Rev A