External Lighting Details.

Proposed Camp Site adj Lock 38

Marsden Lane, Marsden.

This information is provided to satisfy condition number 5 within planning approval reference 2019/90988.

The location of the lighting is shown on drawing number C 07.

April 2023.

RICOMAN®

Tel: +44 (0)161 4515924 **Email:** sales@ricoman.co.uk
Web: www.ricoman.com

Quickwire

Tel: +44 (0)1183 840025 **Email:** sales@quickwire.co.uk
Web: www.quickwire.co.uk

Ricoman Product Data

Warranty	5 years
Applications	Interior
Certification(s)	UKCA, CE, RoHS

Physical Data

Colour Finish	White as standard Chrome | Brushed Chrome | Black optional
Luminaire Fixing	Recessed
Construction Material	Polycarbonate
Diffuser Type	TP(a) rated
Unit Weight	(kg) 0.20

Electrical Data

Wattage	6W
Power Factor	>0.90
Voltage Range	AC220-240V
Running Current	71mA
Inrush Current	<10A
Protection Class IEC	Class II
Driver	Internal mains dimmable

Performance Data

Lumens	602
Efficacy	~100 Lm/W
Operating Temperature	-20oC to +45oC
Kelvin	3000K | 4000K (selectable via switch behind bezel)
Beam Angle	60°
Operating Hours	>50000
CRI	>80 Ra
Fire Rated	Yes (30/60/90 min)
IP Rating	IP65 (front) | IP54 (back)
IK Rating	IK08
Macadam Ellipse	≤6 sdcm
L70 B50	50,000 hours
L80 B50	30,000 hours
L90 B50	15,000 hours

Quickwire Socket Data

Rating Supply Voltage	250V~ 16A (Overcurrent protection limited to 16A)
Poles	3 - pole
Cable Entry	2 x 1.0mm² – 1.5mm² Twin & Earth CPC Cable (6242Y or 6242B), Solid cores (Class 1)
Termination	Utilizes rapid Quickwire push in technology
Cord Grip	Fully Automatic
Conductor Size	1.0mm² – 1.5mm² Twin & Earth CPC Cable (6242Y or 6242B), Solid cores (Class 1)
Dimensions	23mm x 24mm x 60mm (fits through a 30mmØ hole)
IP Rating	IP30

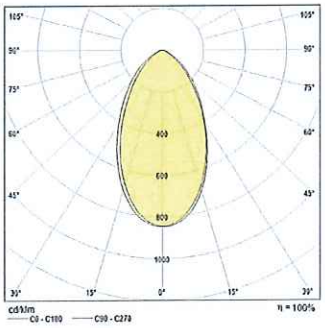

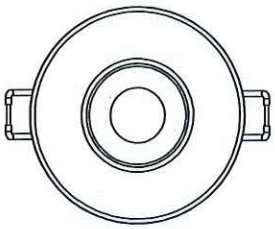

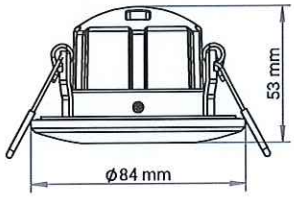

Cut out Ø70 mm

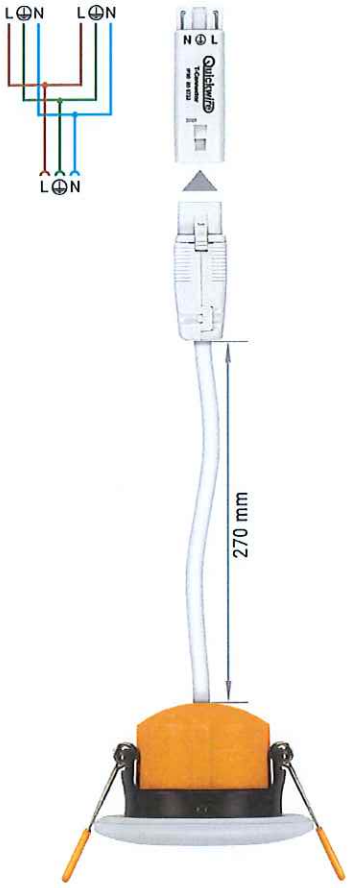

TYPE A

TYPE B

Selva LED Range

Exterior Wall Lighting

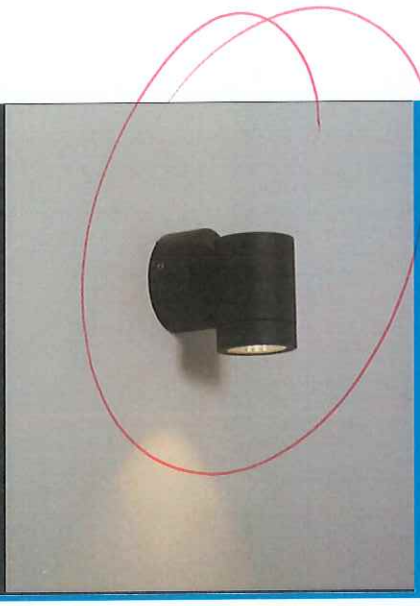

Data Sheet

Product Information

The Selva LED wall lights are suitable for highlighting wall features for commercial and domestic applications. Also available in 2 versions a down light and an Up/Down light.

Product Features

- 2 year warranty
- Class I
- IP65
- 45˚ Beam angle
- CRI: Ra80
- 5w 3000K LED head
- Non-dimmable
- Life Expectancy up to 25,000hrs

KSR1321 – Selva Up & Down

www.ksrlighting.com

Product Dimensions

KSR1320

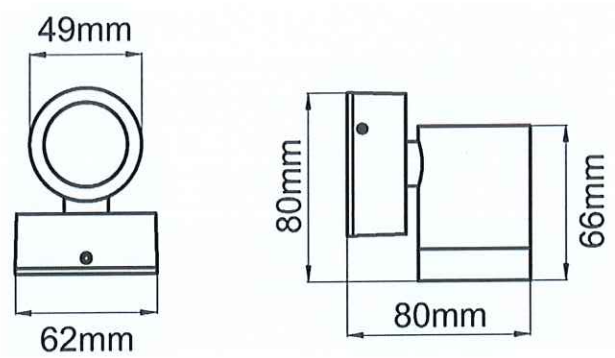

KSR1321

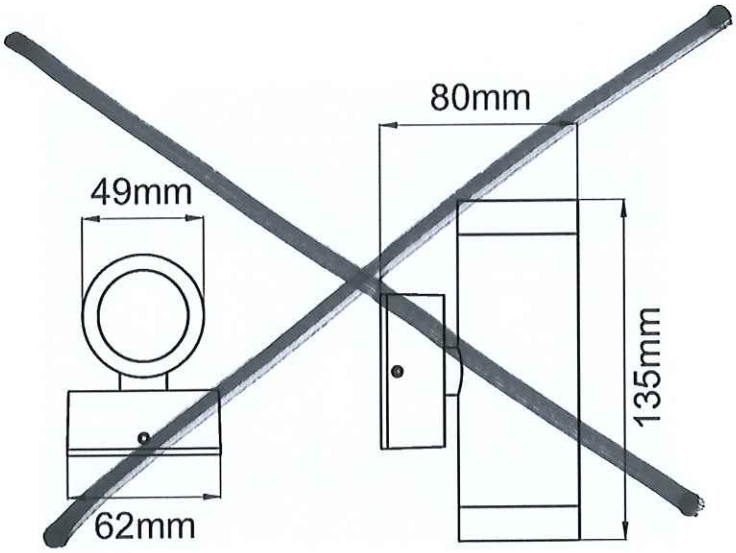

KSR Lighting is constantly developing and improving its products. For this reason, all product descriptions in this data sheet are intended as a general guide, and KSR may change specifications from time to time in the interest of product development, without prior notification or public announcement. All descriptions in this data sheet present only general particulars of the goods to which they refer and shall not form part of any contract. Data in this guide has been obtained in controlled experimental conditions. However, KSR Lighting cannot accept any liability arising from the reliance on such data to the extent permitted.

Product Specification

Product Code	Product Description	Wattage (W)	CCT (K)	Lumens (lm)	CRI (Ra)	Energy Efficiency Class	Protection Class
KSR1320	Selva 5w 3000K LED Single Wall Light	5w	3000	245	80	A+	I
[redacted]	[redacted]	[redacted]	[redacted]	[redacted]	[redacted]	[redacted]	[redacted]

Technical Data	Selva Single	Selva Up & Down
Nominal voltage	220~240VAC	220~240VAC
Operating frequency	50Hz	50Hz
Circuit Wattage	5w	10w
Circuit Current	0.018A	0.036A
Driver mA Rating	210mA	210mA
PFC	0.6	0.6
In Rush Current	0.35A Max Peak	0.4A Max Peak
Ambient temperature range	-10°c to +30°c	-10°c to +30°c
IP rating	65	65

Construction

Body: Aluminium
Lens: Glass

Standards

BSEN60598-1:2015 Luminaires – Part 1: General requirements and tests

In Conformity with

LVD Low voltage directive 2014/35/EU
EMC Electromagnetic compatibility directive 2014/30/EU
ERP Energy related products directive 2009/125/EC
RoHS Restriction of hazardous substances 2011/65/EU

TYPE C

Duet Bollard 800mm

- Ultra modern bollard with die-cast aluminium body suitable for residential and hospitality applications
- Powder coated anodized graphite paint finish for enhanced durability
- Flange mounted base for surface fixing
- Non-dimmable

General Information

Lamp Type	LED
IP Rating	IP65
IK Rating	IK07
Class Protection	1
Internal / External	External
Surface / Recessed / Suspended	Surface
Warranty (Years)	3
Material	Aluminium

Technical Information

Wattage	17W
Lumens Delivered	1500lm

Lm/W	91lm/W
Beam Angle	110
CRI	80
CCT	3000/4000K
Input	100/240V
Hertz	50/60Hz
Operating Temp	-20°C to 45°C
Lumen Depreciation	L70 36,000h
Power Factor	0.89

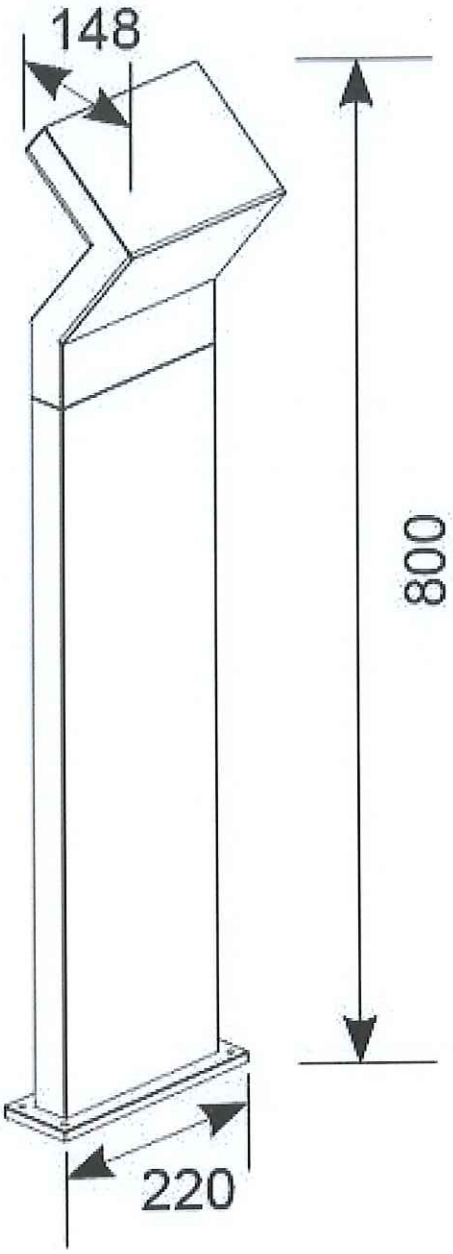
148
800
220

1.1 Ansell Lighting, Duet LED Bollard CCT (ADULEDB/080)

1.1.2 LDC

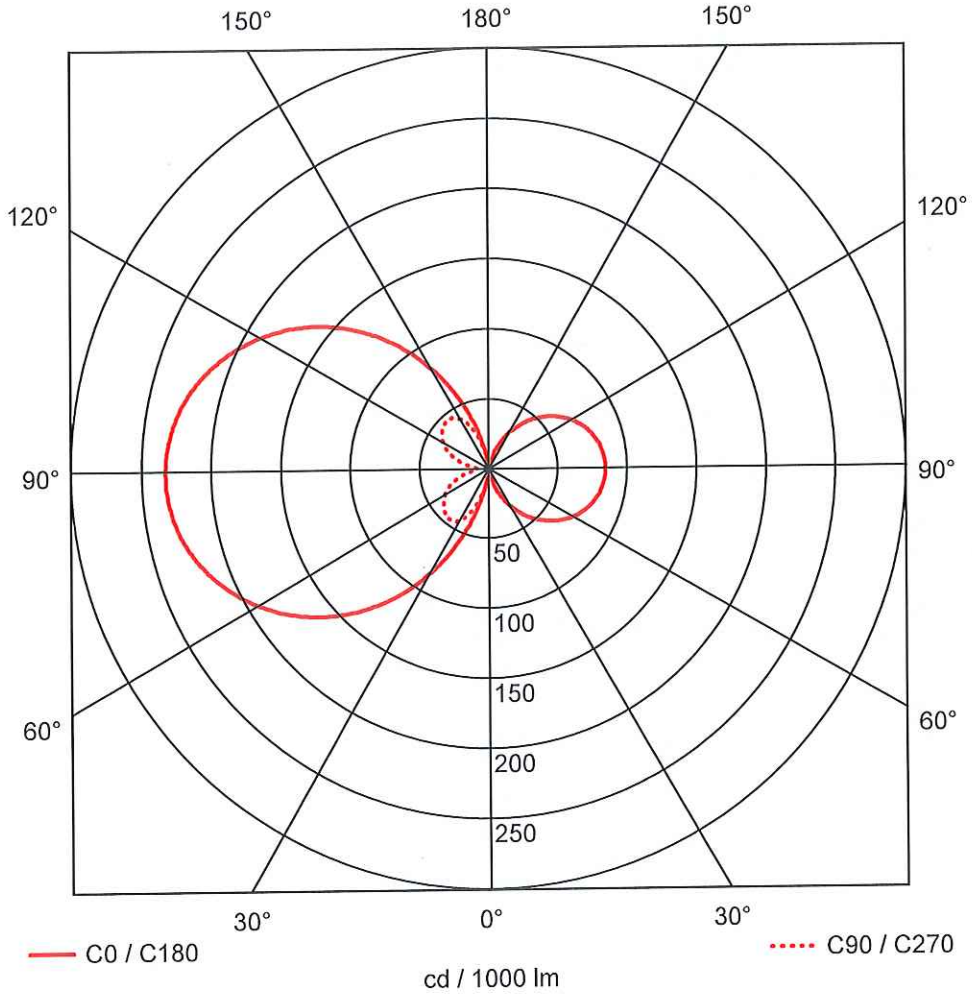

	C0	C90	C180
0°	0	0	0
10°	1	0	4
20°	16	0	43
30°	31	0	86
40°	46	0	127
50°	59	0	163
60°	70	0	193
70°	78	0	215
80°	82	0	229
90°	84	0	233
100°	82	0	227
110°	77	0	213
120°	69	0	190
130°	58	0	160
140°	45	0	124
150°	30	0	83
160°	15	0	41
170°	1	0	3
180°	0	0	0
	cd / 1000 lm		

Manufacturer : Ansell Lighting
Order number : ADULEDB/080

Efficiency factor : 100%
Luminaire efficacy : 75.22 lm/W (C11)
Light distribution : asymmetric
Beam Angle : -- C0
-- C90
-- C180
-- C270

1 Luminaire data

1.1 Ansell Lighting, Duet LED Bollard CCT (ADULEDB/080)

1.1.1 Data sheet

Manufacturer: Ansell Lighting

ADULEDB/080 **Duet LED Bollard CCT**

Luminaire data

Luminaire efficiency	:	100%
Luminaire efficacy	:	75.22 lm/W
Classification	:	C11 ↓50.5% ↑49.5%
CIE Flux Codes	:	11 36 67 50 100
UGR 4H 8H	:	29.8 / 31.0
Power	:	17.8 W
Luminous flux	:	1339 lm
Dimensions	:	50 mm x 180 mm x 1 mm

Equipped with

Quantity	:	2
Designation	:	2835
Colour	:	
Luminous flux	:	669.5 lm

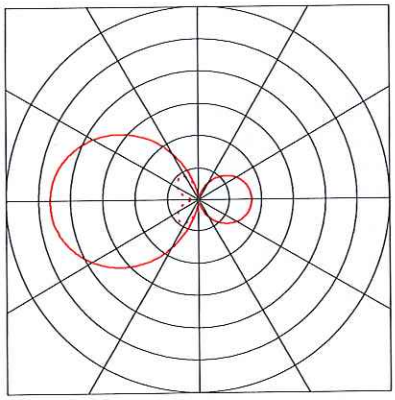

TYPE D

Asuri 1 Post Top Cool White

- Modern die-cast aluminium post top lantern suitable for hospitality and retail applications
- Electrostatic paint finish for enhanced corrosion resistance
- Ideal for large carparks and large open areas
- Adjustable spigot bracket 50-76mm supplied as standard
- Powered by Philips

General Information

Lamp Type	LED
IP Rating	IP66
IK Rating	IK10
Class Protection	1
Internal / External	External
Surface / Recessed / Suspended	Surface
Warranty (Years)	5
Material	Aluminium

Technical Information

Wattage	42W
Lumens Delivered	3300lm
Lm/W	80lm/W
Beam Angle	135
CRI	70
CCT	4000K
Input	100/240V
Hertz	50Hz
Operating Temp	-40 to 55°C
Lumen Depreciation	L70 50,000h

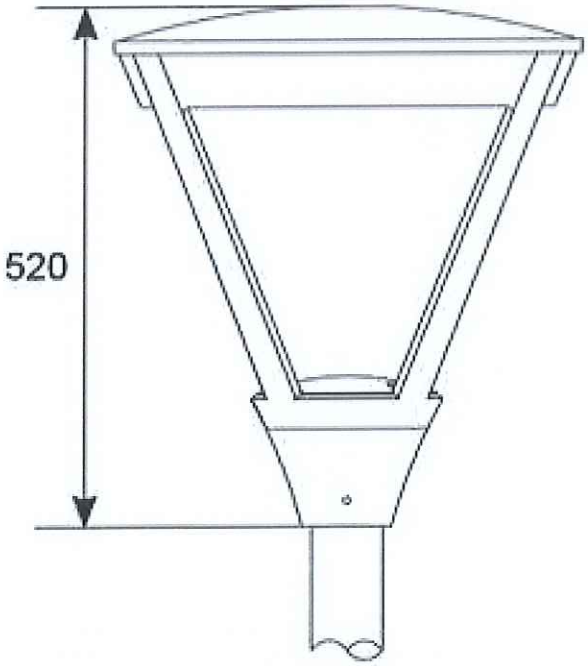
520

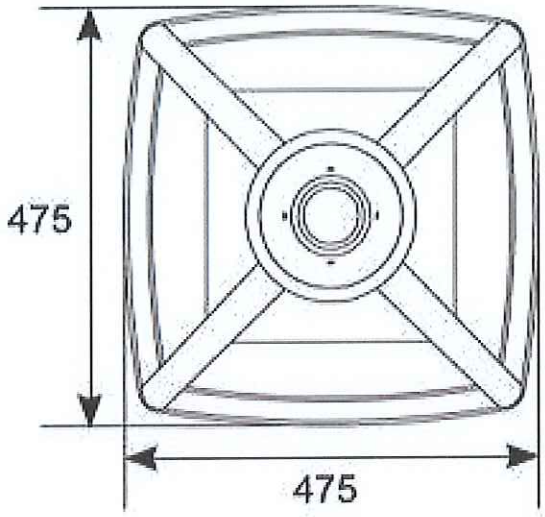
475
475

Object :
Installation :
Project number :
Date :

1.1 Ansell Lighting, Asuri LED Post Top (ASULED/1/CW)

1.1.2 LDC

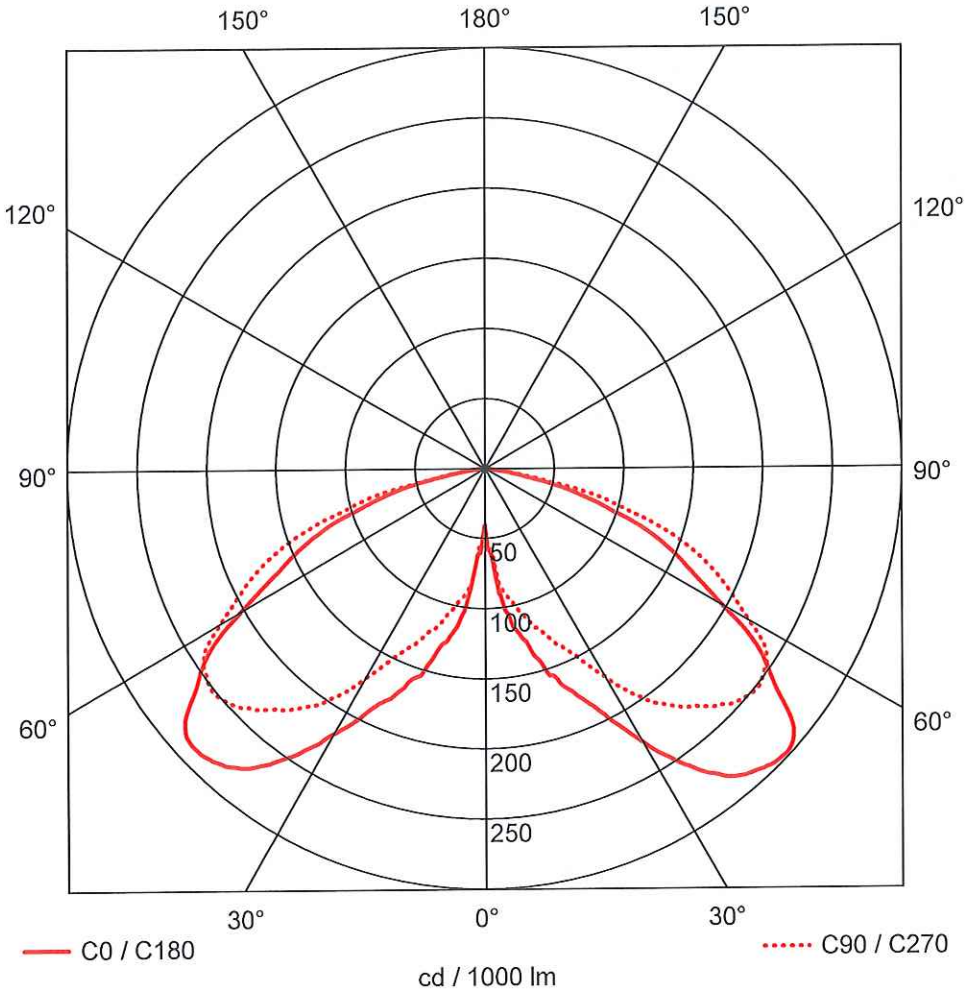

	C0	C90	C180
0°	40	40	40
5°	68	61	64
10°	114	93	112
15°	139	109	135
20°	166	127	162
25°	189	145	186
30°	226	172	218
35°	262	202	251
40°	287	223	277
45°	297	240	288
50°	289	251	282
55°	248	247	250
60°	198	220	204
65°	156	187	157
70°	115	148	120
75°	68	94	74
80°	22	31	27
85°	4	4	5
90°	2	2	2
	cd / 1000 lm		

Manufacturer	: Ansell Lighting
Order number	: ASULED/1/CW
Luminaire name	: Asuri LED Post Top
Equipment	: 1 x 40W 42 W / 4000 lm
Dimensions	: L 475 mm x W 475 mm x H 1 mm
File name	: rlx_20180907162019.ldt

Efficiency factor	: 90.8%
Luminaire efficacy	: 86.48 lm/W (A30)
Light distribution	: sym. to C0-C180
Beam Angle	: 139.8° C90-C270 65.9° C0 66.2° C180

Object :
Installation :
Project number :
Date :

1 Luminaire data

1.1 Ansell Lighting, Asuri LED Post Top (ASULED/1/CW)

1.1.1 Data sheet

Manufacturer: Ansell Lighting

ASULED/1/CW **Asuri LED Post Top**

Luminaire data

Luminaire efficiency	:	90.8%
Luminaire efficacy	:	86.48 lm/W
Classification	:	A30 ↓100.0% ↑0.0%
CIE Flux Codes	:	31 72 97 100 91
UGR 4H 8H	:	23.4 / 24.4
Power	:	42 W
Luminous flux	:	3632 lm
Dimensions	:	475 mm x 475 mm x 1 mm

Equipped with
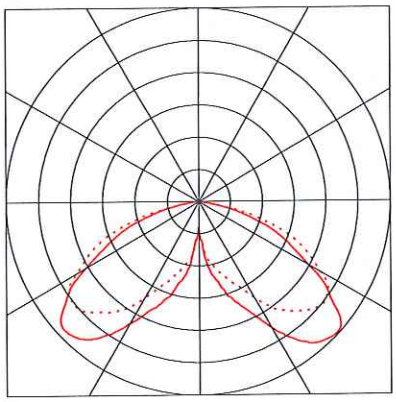
Quantity	:	1
Designation	:	40W
Colour	:	
Luminous flux	:	4000 lm