YW REF: H-3-264-822

Note: Proposed manhole to be constructed fully in accordance with a Type B manhole

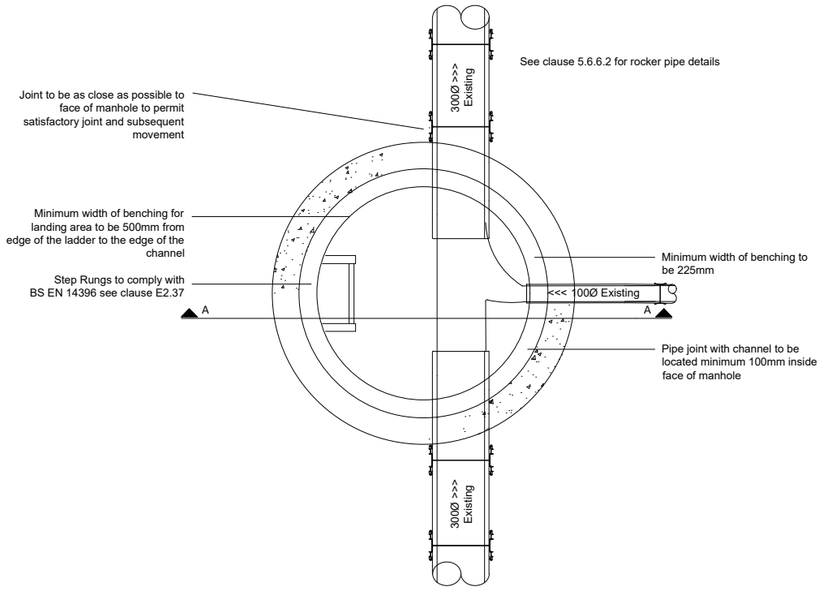

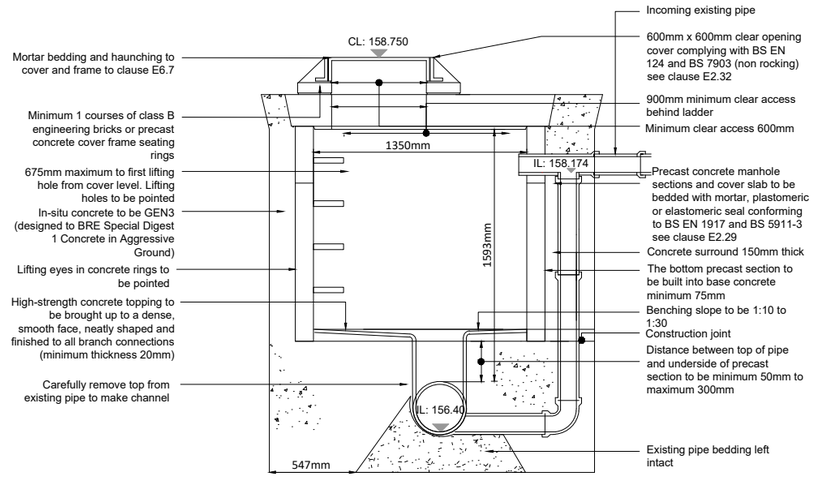

Section A - A
Scale 1:20

Manhole MHC1 Outfall Base Plan and Section
Scale 1:20

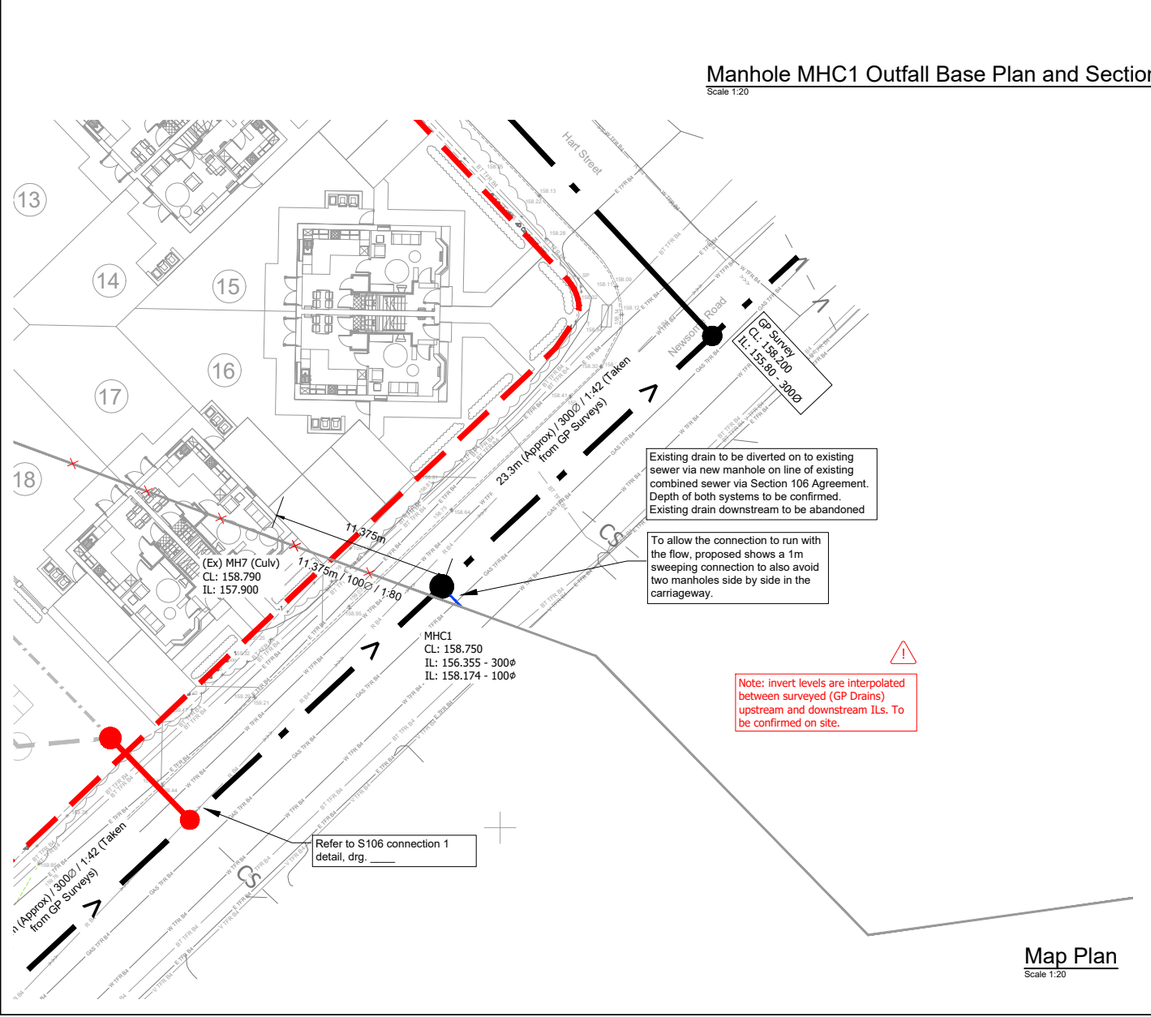

Map Plan
Scale 1:20

Key

- Site Boundary
- Proposed Combine Sewer
- Existing Combine Sewer
- Existing Culvert Surface Water Course
- Existing culvert to be redirected

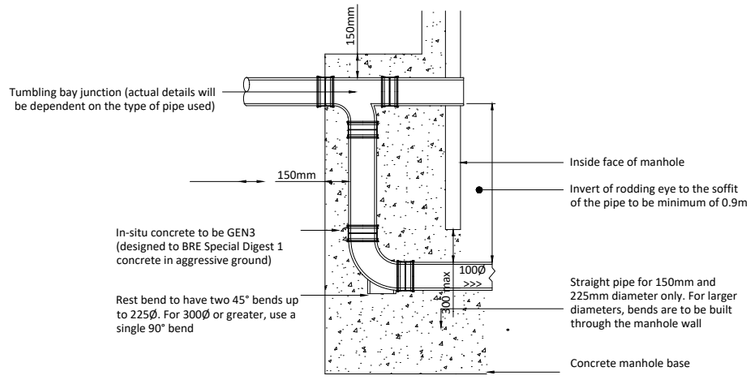

Typical External Backdrop Detail
(Scale 1:20)

Yorkshire Water Notes (Continued)

13. Yorkshire Water policy is that Type "C" brick manholes and 1050mm diameter manhole rings are not preferred. Instead it is preferred that you use a type "B" manhole with 1200mm diameter or 1500mm diameter rings, with the opening sited over the channel where depth of cover to pipe soffit is 1 - 1.5.

14. Adoptable plastic pipes to be BSI Kitemark (**Certified to WIS 4-35-01** and BS/EN13476). Adoptable plastic sewer pipes to be laid in maximum 3 metre lengths unless there is a specific operational need to lay longer lengths. Plastic channel sections in manholes are not acceptable and Yorkshire water would prefer clayware channel in manholes. We have found that plastic channels are difficult to set in concrete because they float and a satisfactory finish cannot be obtained on the benching.

15. All adoptable works to be in accordance with Yorkshire Water's Specification.

16. The minimum crushing strength for clay pipes should be as follows : 100mm dia. 40KN/m, 150mm dia. 40KN/m, 225mm dia. 45KN/m and 300mm dia. 72KN/m. The minimum crushing strength for concrete pipes should be - (Class 120 to EN 1916/BS5911-1 2002). Plastic pipes should conform to WIS 4-35-01 and BS EN13476.

17. Where a B125 cover and frame has been approved, this **must not** be coated in plastic and must have lifting eyes suitably sized to accommodate standard lifting keys. Screw down covers are not acceptable.

Do Not Scale

DESIGN REVIEW

Design review by:	**	Checked by:	**

Residual hazards:

Health, Safety & Environmental Notes

NOTES

Yorkshire Water Notes

1. All adoptable sewer works and material to be in accordance with Codes for Adoption, The relevant British/European and Yorkshire Water's Standards/Requirements/Addendum to the Mechanical and Electrical Specification and Kitemarked.

2. Manhole covers shall/must have a clear opening of 600mm and shall be Class D400 to BS EN 124 with 150mm deep frames in highways.

3. Where a B125 cover and frame has been approved, this must not be coated in plastic and must have lifting eyes suitably sized to accommodate standard lifting keys. Screw down covers are not acceptable.

4. Filled ground must be filled and consolidated under the supervision and to the satisfaction of Yorkshire Water before any sewer works are carried out.

5. Yorkshire Water is **not** obliged to accept filter drain/land drainage runoff into the public sewer network or adoptable drainage system (**directly or in-directly**). An alternative method of disposal of the land drainage runoff will therefore be required and you will have to liaise with the local Authority, Land Drainage Section with regard to the disposal of the filter drain/land drainage runoff.

6. Cover slabs must carry the BSI kitemark or will be rejected by Yorkshire Water inspector. Where the clear opening of the kitemarked product is different to that of the cover and frame, a loading bearing slab should be fitted above the cover slab to bring the size down 600mm x 600mm for the Yorkshire Water specified cover size. Please refer to Concrete Pipe Systems Association (**CPSA**) "Technical bulletin" issued autumn 2004 for kitemarked cover slab opening sizes.

7. Sulphate resistant cement (**C20-DC2**) and precast concrete products must be used or a laboratory report provided proving that such precautions are not necessary.

8. The adoptable sewers should be a minimum of 1m and manholes 0.5m from kerb faces and service margins.

9. Sewers must have 5 metres clearance from trees and hedges

10. Sewers to be laid in class "S" bedding (**150mm granular bed and surround**). Where depth of cover to top of the sewer is less than 1.2m in highways and verges (**or less than 900mm in none vehicular access areas**) then a concrete slab should be provided above granular bed and surround.

11. Bedding and backfill material to conform to the requirement of Water Industry Specification 4-08-02 (**Table A2**).

12. The chamber size of manholes with more than one connection in them may need to be increased an increment to accommodate the connections and bends.

Date	Description	By	Chk	Rev
21.03.22	Map plan corrected and YW notes updated	JZG	AL	P3
27.09.21	Updated notes to suit clients comments	LPW	RNM	P2
27.09.21	Initial Issue	LPW	RNM	P1

ADEPT
CIVIL AND STRUCTURAL CONSULTING ENGINEERS
Web: www.adeptcsce.com
Email: inbox@adeptcsce.com
Tel: 0113 239 4518 (Leeds)
Tel: 0161 974 3620 (Manchester)
Originating Office
1912 Mills, Sunny Bank Mills, Farsley, Leeds, LS28 5UJ

Project
Newsome Road, Huddersfield

Title
S106 Backdrop connection into existing combine sewer

Client
Urban

Scale @ A1	Initial author	Initial checker	Approver	Initial Date
1:20/1:200	LPW	RP	RP	09.21

Status	Purpose	Adept Ref
S2	Preliminary	24.21001

Project Number	Originator	Volume	Level	Type	Role	Drg. No.	Rev.
24.21001	ACE	00	XX	DR	C	0165	P3